1962-63 FORD

Thunderbird

SHOP MANUAL

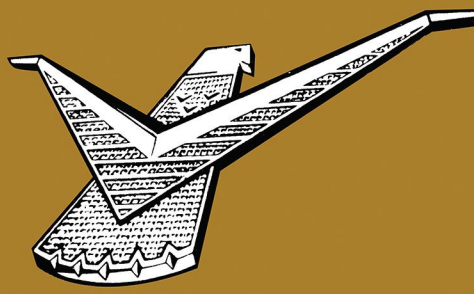

1962

FORD THUNDERBIRD

SHOP MANUAL

Official Licensed Product
Ford Motor Company

5002

SERVICE DEPARTMENT
FORD DIVISION
Ford MOTOR COMPANY

FIRST PRINTING—SEPTEMBER, 1961

INDEX

	GROUP
THUNDERBIRD IDENTIFICATION	
ENGINE AND EXHAUST SYSTEM	1
IGNITION SYSTEM	2
FUEL SYSTEM	3
COOLING SYSTEM	4
CRUISE-O-MATIC TRANSMISSION	5
REAR AXLE AND DRIVE LINE	6
STEERING	7
BRAKES AND SUSPENSION	8
GENERATING AND STARTING SYSTEMS	9
LIGHTS, INSTRUMENTS, AND ACCESSORIES	10
BODY	11
[illegible]	12
[illegible]	
[illegible]	

FOREWORD

This manual provides information for the proper servicing of the 1962 Thunderbird. The descriptions and specifications contained in this manual were in effect at the time the manual was approved for printing. The Ford Division of Ford Motor Company reserves the right to discontinue models at any time, or change specifications or design, without notice and without incurring obligation.

SERVICE DEPARTMENT
FORD DIVISION
FORD MOTOR COMPANY

THUNDERBIRD IDENTIFICATION

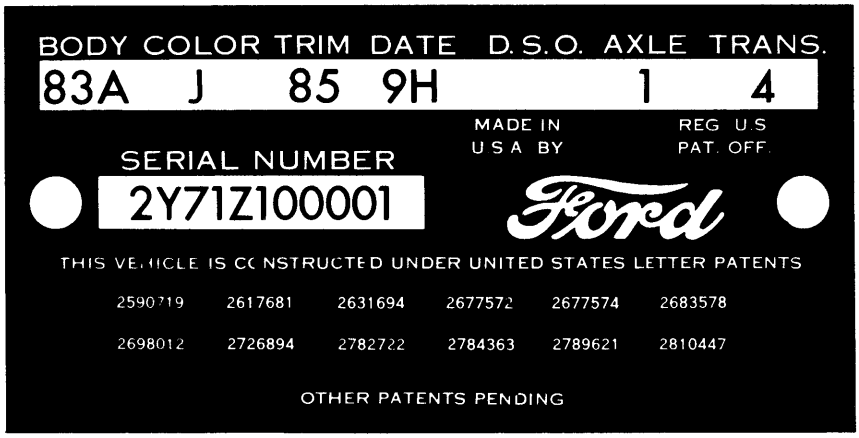

M1072-A

FIG. 1—Thunderbird Patent Plate

Fig. 1 illustrates a Thunderbird patent plate and its elements. The patent plate is attached to the left door front pillar.

VEHICLE DATA

Example (Fig. 1):

63A	J	85	9H	1	4

63A	Tudor Hardtop
J	Red
85	Red Leather
9H	Ninth day of August
1	3.00:1 Axle Ratio
4	Cruise-O-Matic

BODY

63A	Tudor Hardtop
76A	Tudor Convertible

COLOR

If a special paint is used, the paint color space will not be stamped.

Code	M30J Number	Color	Sales Name
A	1724	Black	Raven Black
D	1070	Med. Turquoise Metallic	Patrician Green
E	1269	Med. Blue Metallic	Acapulco Blue
F	1226	Lt. Blue	Skymist Blue
G	1446	Silver Blue Metallic	Silver Mink
H	1544	Dark Blue Metallic	Caspian Blue
J	1515	Red	Rangoon Red
K	1452	Lt. Turquoise	Chalfonte Blue
L	1458	Pink	Sahara Rose
M	1238	White	Corinthian White
N	921	Diamond Blue	Diamond Blue
R	1456	Yellow	Tucson Yellow
T	1543	Lt. Beige	Sandshell Beige
U	1450	Dark Turquoise Metallic	Deep Sea Blue
V	1470	Chestnut Metallic	Chestnut
X	1444	Maroon Metallic	Heritage Burgundy
Z	1427	Beige Metallic	Fieldstone Tan

TRIM

Deviation trim sets will use existing trim codes plus a suffix. A trim code with a numerical suffix is not serviced, while a trim code with an alphabetical suffix is serviced.

Code	Color and Material
50	Lt. Silver Blue Met. Vinyl
52	Light Blue Metallic Vinyl
54	Lt. Pearl Beige Vinyl
55	Red Vinyl
56	Black Vinyl
57	Light Turquoise Metallic Vinyl
59	Med. Chestnut Vinyl
70	Lt. Silver Blue Met. Vinyl & Med. Silver Blue Bedford Cloth
72	Lt. Blue Met. Vinyl & Med. Blue Bedford Cloth
74	Lt. Pearl Beige Vinyl & Med. Beige Bedford Cloth
76	Black Vinyl & Med. Gray Bedford Cloth
77	Lt. Turquoise Met. Vinyl & Med. Turquoise Bedford Cloth
80	Lt. Silver Blue Met. Leather
82	Med. Blue Leather
84	Lt. Pearlescent Beige Leather
85	Red Leather
86	Black Leather
87	Lt. Turquoise Metallic Leather
89	Med. Chestnut Metallic Leather

DATE

The code letters for the month are preceded by a numeral to show the day of the month when the Thunderbird was completed. The second year code letters are to be used if 1962 model production exceeds 12 months.

Month	First Model Year	Second Model Year
January	A	N
February	B	P
March	C	Q
April	D	R
May	E	S
June	F	T
July	G	U
August	H	V
September	J	W
October	K	X
November	L	Y
December	M	Z

DSO

Thunderbirds built to a Domestic Special Order, Foreign Special Order, or Pre-Approved Order have the complete order number recorded in this space. If the unit is regular production, this space will remain blank.

AXLE

Code	Ratio
1	3.00:1
A*	3.00:1

*Equa-Lock type.

TRANSMISSION

Code	Type
4	Cruise-O-Matic

SERIAL NUMBER

Example (Fig. 1): 2Y83Z100001

2	1962 Model
Y	Wixom Assembly Plant
83	Tudor Hardtop
Z	8-Cylinder 390 Cubic Inch Engine
100001	First Unit Built

MODEL YEAR

The number "2" designates 1962.

ASSEMBLY PLANT

Code	Location
Y	Wixom Assembly Plant
S	Pilot Plant

MODEL

Code	Type
83	Tudor Hardtop
85	Tudor Convertible

ENGINE

Code	Type
R	8-Cylinder 390 Cubic Inch (4-barrel Low Compression Export, 84 Octane)
Z	8-Cylinder 390 Cubic Inch (4-barrel)

CONSECUTIVE UNIT NUMBER

The assembly plant, with each model year, begins with consecutive unit number 100001 and continues on for each unit built.

1958 FORD THUNDERBIRD SHOP MANUAL

GROUP 1

ENGINE AND EXHAUST SYSTEM

		PAGE
PART 1-1	ENGINE	1- 2
PART 1-2	EXHAUST SYSTEM	1-41
PART 1-3	SPECIFICATIONS	1-43

PART 1-1 ENGINE

Section		Page
1	Description	1-2
2	Engine Trouble Diagnosis	1-6
3	Engine Tests and Adjustments	1-12
4	Engine Removal and Installation	1-13
5	In-Chassis Repair Operations	1-15
	Engine Supports	1-15
	Valve Rocker Arm Shaft Assembly	1-15
5	In-Chassis Repair Operations (Continued)	
	Intake Manifold	1-17
	Exhaust Manifold	1-18
	Positive Crankcase Ventilation System	1-19
	Cylinder Heads and Valves	1-19
	Valve Stem Seal Replacement	1-22
	Cylinder Front Cover and Timing Chain	1-23
	Camshaft	1-25
5	In-Chassis Repair Operations (Continued)	
	Camshaft Rear Bearing Bore Plug Replacement	1-26
	Hydraulic Valve Lifter Replacement	1-26
	Crankshaft Lower Rear Oil Seal Replacement	1-27
	Main and Connecting Rod Bearing Replacement	1-28
	Piston and Connecting Rod Assembly	1-28
	Flywheel	1-32
	Oil Filter Replacement	1-32
	Oil Pan and Oil Pump	1-32
6	Work Stand Repair Operations	1-34
	Crankshaft	1-34
	Camshaft Bearing Replacement	1-36
	Engine Disassembly	1-36
	Cylinder Block	1-38
	Engine Assembly	1-38
7	Crankcase Ventilation System Maintenance	1-40

1 DESCRIPTION

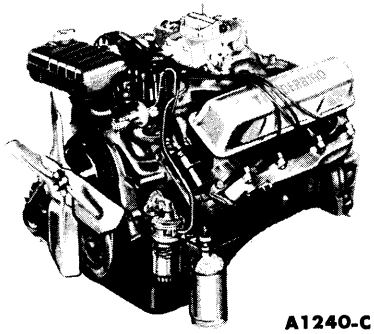

A1240-C

FIG. 1—Thunderbird 390 Special V-8 Engine

The Thunderbird 390 Special V-8 engine (Figs. 1 and 2) has a 4.05-inch bore and a 3.78-inch stroke and a total piston displacement of 390 cubic inches. It has a compression ratio of 9.6:1. The patent plate symbol for the engine is "Z."

MANIFOLDS

An engine coolant heated spacer is located between the carburetor and the intake manifold (Fig. 3). The coolant flows from the front of the engine through the spacer inlet hose and into the carburetor coolant spacer. The coolant circulates through the spacer and flows into the heater inlet hose and into the heater. Ex-

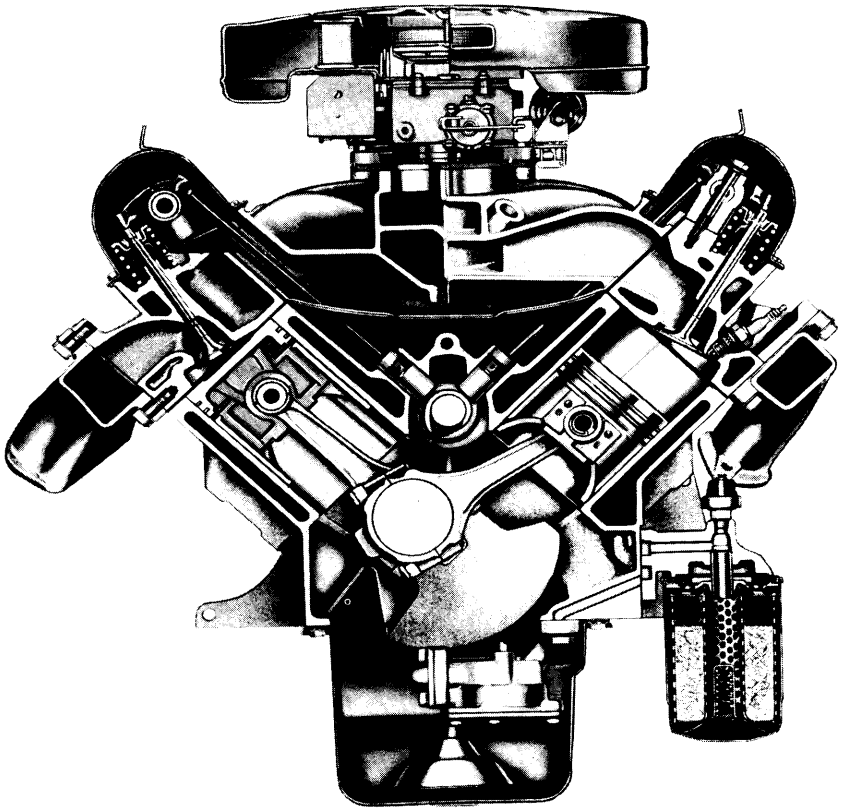

A1241-C

FIG. 2—Sectional View 390 Special V-8 Engine

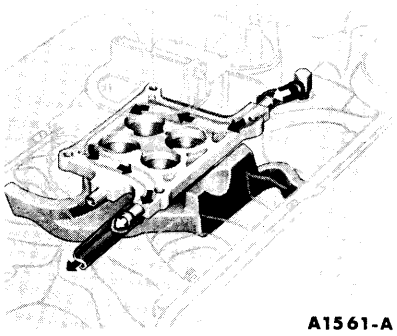

FIG. 3—Intake Manifold Coolant Passages

haust gases provide the initial heat necessary to assist in vaporizing the incoming fuel mixture.

The intake manifold has two sets of fuel passages, each with its own separate inlet connection to the carburetor (Fig. 4). The right barrels of the carburetor feed Nos. 1, 4, 6, and 7 cylinders and the left barrels feed Nos. 2, 3, 5, and 8 cylinders.

The distributor is mounted at the left front of the intake manifold.

Warm air for the automatic choke is drawn from the heat chamber of the right exhaust manifold (Fig. 5).

CYLINDER HEADS

The cylinder head assemblies contain the valves and the valve rocker arm shaft assembly. The combustion chambers are machined in the head. Valve guides are an integral part of the head. The valves are arranged from front to rear on both banks E-I-E-I-I-E-I-E (Fig. 6).

CYLINDER BLOCK

The cylinders are numbered from front to rear, on the right bank 1, 2,

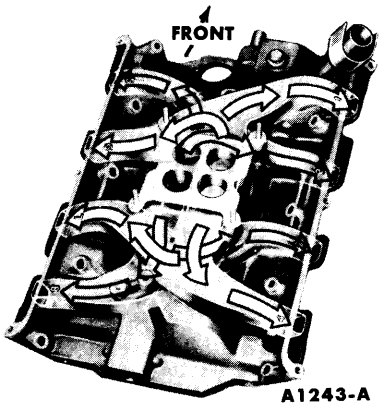

FIG. 4—Intake Manifold Fuel Passages

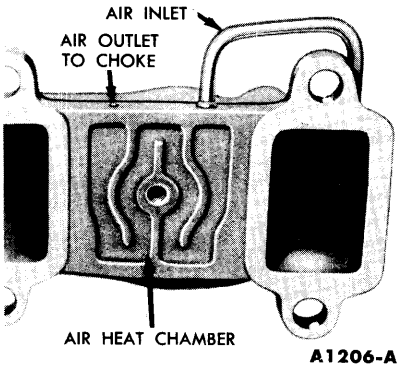

FIG. 5—Automatic Choke Heat Chamber

3 and 4 and on the left bank 5, 6, 7 and 8. The firing order is 1-5-4-2-6-3-7-8.

The oil pump, mounted inside the oil pan at the front, is driven by the distributor through an intermediate drive shaft.

The crankshaft is supported by five main bearings. Crankshaft end thrust is controlled by the flanges of the No. 3 main bearing.

The pistons have two compression rings and one oil control ring. The top compression ring is chrome-plated and the lower compression ring is phosphate-coated. The oil control ring assembly consists of a serrated spring and two chrome-plated steel rails.

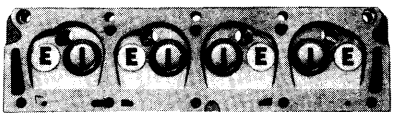

FIG. 6—Valve Port Arrangement

VALVE TRAIN

The intake and exhaust valve assemblies are the rotating-type which rotate each time the valve opens and closes.

The push rods are solid steel with oil cushioned sockets.

The camshaft is supported by five bearings pressed into the block. It is driven by a sprocket and timing chain in mesh with a sprocket on the crankshaft. Camshaft end play is controlled by a thrust button and spring located between the camshaft sprocket bolt and the cylinder front cover. An eccentric, bolted to the front end of the camshaft, operates the fuel pump.

Hydraulic valve lifters are used which provide zero valve lash. The operation and parts identification of the hydraulic valve lifters are shown in Fig. 7.

When the valve is closed, the lifter assembly is on the base circle of the camshaft lobe and the valve push rod is in its lowest position. With the lifter assembly in this position, the plunger spring expands forcing the plunger upward. This action is trans-

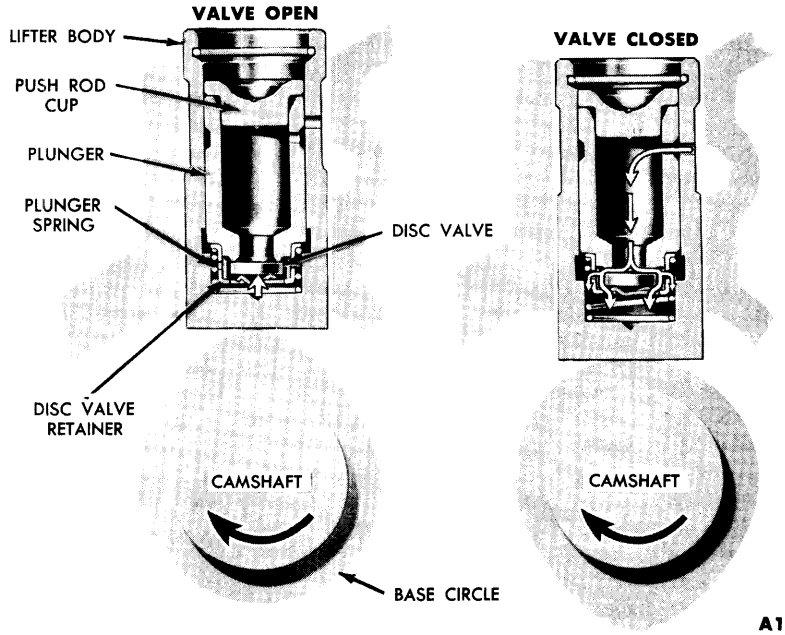

FIG. 7—Typical Hydraulic Valve Lifter Operation

mitted to the valve rocker arm via the valve push rod until there is solid contact between the valve and the valve end of the valve rocker arm (zero valve lash). In this position, the oil hole in the lifter and plunger is indexed with the lifter oil gallery and oil is forced under pressure into the plunger. This creates a pressure differential above and below the valve disc. The high pressure above the valve disc forces the valve disc open and the oil fills the area below the plunger, equalizing the pressure on each side of the valve disc.

Whenever clearance between the valve and the valve rocker arm tends to be present, the plunger spring expands pushing the plunger until there is solid contact between all parts of the valve train mechanism.

As the camshaft rotates (valve opening), the valve lifter is raised and the sudden increase in oil pressure below the plunger forces the valve disc closed and the lifter becomes a hydraulic ram. During this period, a slight leakage of oil from below the plunger occurs. As the high point on the camshaft lobe rotates past the lifter, the push rod forces the valve lifter down and reseats the valve. The pressure on the oil below the plunger is relieved and the valve disc opens so that the chamber can again be filled. This cycle is repeated for each revolution of the camshaft.

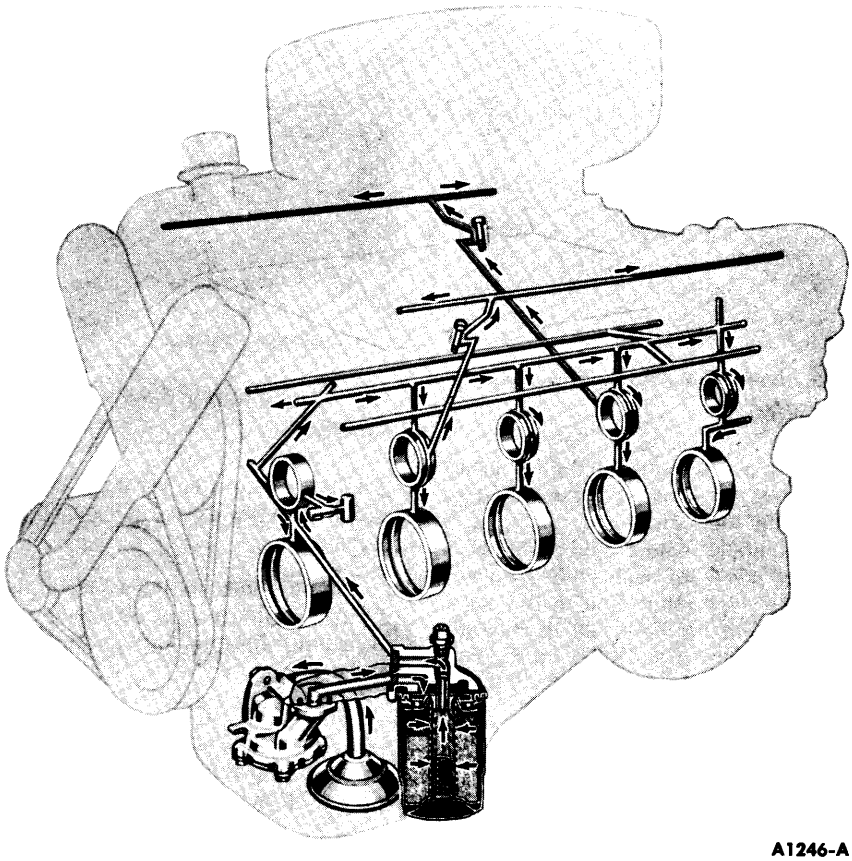

A1246-A

FIG. 8—Lubrication System

LUBRICATION SYSTEM

Oil from the oil pan sump, located in the front of the oil pan, is forced through the pressure-type lubrication system (Fig. 8) by a rotor oil pump. A spring-loaded relief valve in the pump limits the maximum pressure of the system. Oil relieved by the valve is directed back to the intake side of the pump.

All the oil discharged by the pump passes through a full flow-type filter before it enters the engine. The filter is mounted in a vertical position at the lower left front of the engine. A relief valve in the filter permits oil to bypass the filter if it becomes clogged.

From the filter, the oil flows into the main oil gallery which is located in the center of the valve push rod chamber floor. The oil gallery supplies oil to each individual camshaft bearing, through drilled passages in the block. Passages are drilled from each camshaft bearing to each main bearing. No. 1 camshaft bearing feeds No. 1 main bearing, and No. 2 camshaft bearing feeds No. 2 main bearing, etc. The oil then flows through notches or grooves in the main bearings to lubricate the crankshaft journals. A jiggle pin in the main oil gallery front plug allows any air that may be trapped in the oil to escape. The timing chain and sprockets are splash lubricated by oil from the jiggle pin.

The crankshaft is drilled from the main bearings to the connecting rod bearings.

A small groove is located in the connecting rod at the mating face where the cap contacts the connecting rod. This groove is used as an oil squirt hole for cylinder wall lubrication. Oil from the connecting rod squirt hole lubricates the opposite cylinder wall. For example, the No. 1 connecting rod oils No. 5 cylinder, etc. As the crankshaft turns, the hole in the connecting rod bearing aligns with the hole in the journal causing a direct squirt of oil onto the cylinder wall.

Oil passages are drilled from the main oil gallery to each valve lifter oil gallery. Oil from here feeds the valve lifter assemblies. A reservoir at each valve lifter bore boss traps oil so that oil is available for valve lifter lubrication as soon as the engine starts.

An oil passage is drilled from No. 2 camshaft bearing web to the left cylinder head between Nos. 5 and 6 cylinders to lubricate the valve rocker arm shaft assembly (Fig. 9). The oil passage in the cylinder head is drilled from the cylinder head bolt bore to the No. 2 valve rocker arm shaft support.

The oil flows through the valve rocker arm shaft through drilled holes in each valve rocker arm to lubricate the bushing and both ends of the valve rocker arm. The excess oil spirals down the rotating push rods and lubricates the push rod seats. The right valve rocker arm shaft assembly is similarly lubricated from No. 4 camshaft bearing via the No. 4 valve rocker arm shaft support.

A baffle located under the valve rocker arm shaft assembly shields the valve stems from oil splash. Excess oil is returned to the oil pan through drain-back holes located at each end

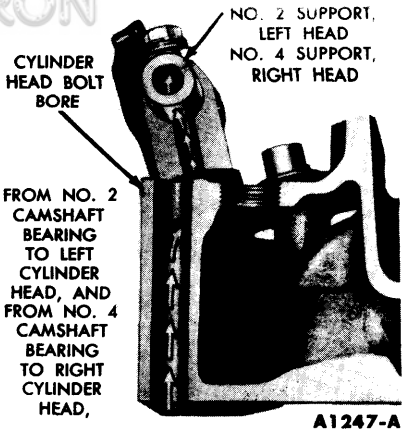

FIG. 9—Valve Rocker Arm Shaft Lubrication

of the cylinder head and in the push rod chamber floor.

CRANKCASE VENTILATION

The engine has either a vent tube-type crankcase ventilation system or a positive crankcase ventilation system.

VENT TUBE-TYPE CRANKCASE VENTILATION SYSTEM

A crankcase ventilation tube is located at the rear of the engine. The forward motion of the car causes a partial vacuum to be formed at the tube outlet. This vacuum action causes air to be drawn through the engine from the oil filler cap located at the front of the intake manifold (Fig. 10). The filler cap contains a filtering element which filters the incoming air.

From the filler cap, the air flows into the front section of the valve push rod chamber where there are few contaminating vapors. Here, the incoming air has a chance to warm up before contacting contaminating vapors originating in the crankcase. Warm ventilating air minimizes the formation of crankcase sludge.

The ventilating air is directed by a baffle, located on the underside of the intake manifold, upward into the front of both valve rocker arm chambers. The baffle also directs air to the front of the lower crankcase and into the timing chain chamber.

Air from the valve rocker arm chamber and from the crankcase flows into the rear of the valve push rod chamber. All air is then directed out the crankcase ventilation tube.

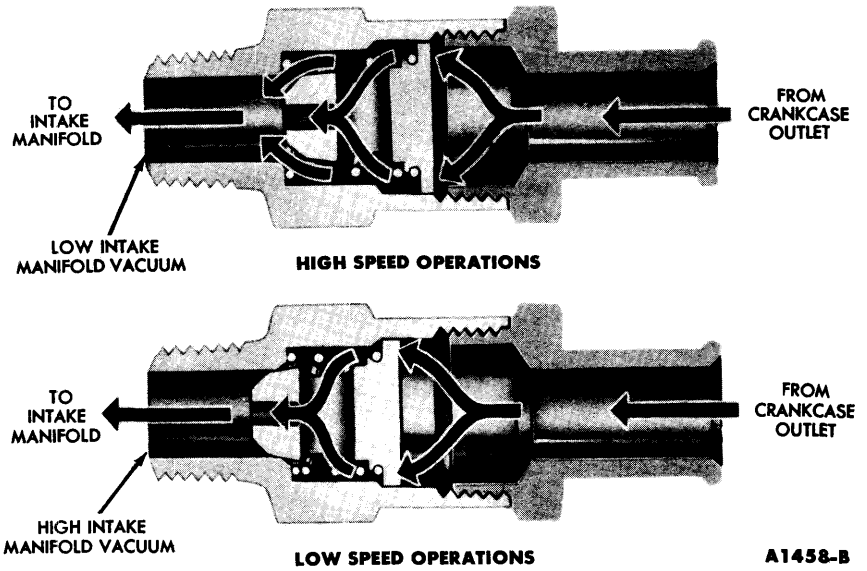

FIG. 11—Positive Crankcase Ventilation Regulator Valve

POSITIVE CRANKCASE VENTILATION SYSTEM

Ventilating air enters the engine in the normal manner through the breather cap and is distributed through the engine in the same manner as in the vent tube-type system. However, instead of the ventilating air being discharged to the atmosphere, it is directed into the intake manifold thru the carburetor spacer. The air is directed into the intake manifold through an exhaust tube which extends from the crankcase ventilation outlet to a spring-loaded regulator valve and then into the carburetor spacer (Fig. 10). The valve regulates the amount of air to meet changing operating conditions.

During idle, intake manifold vac-

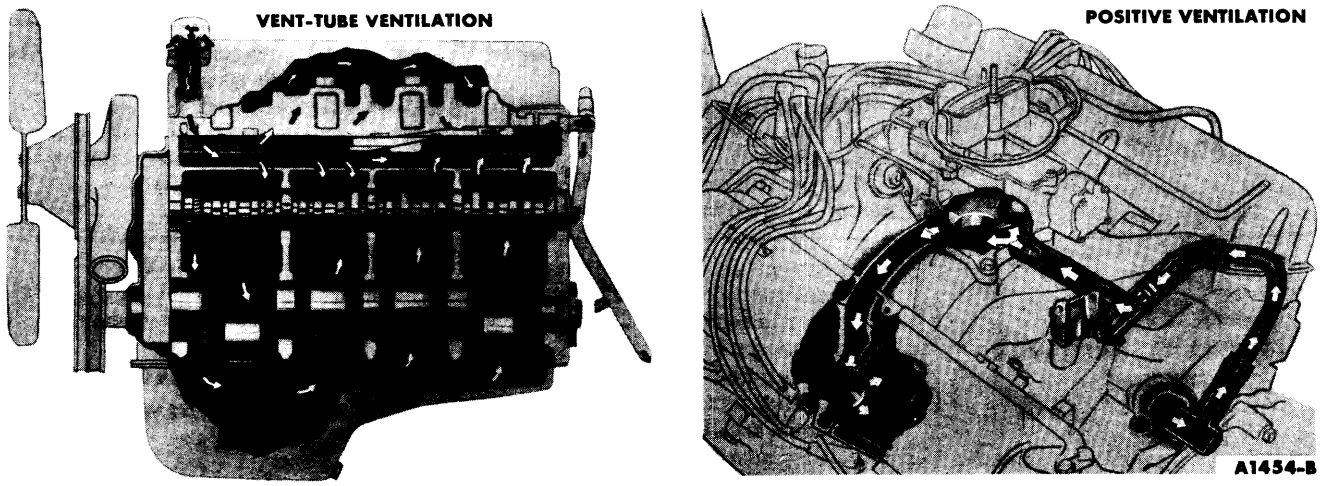

FIG. 10—Crankcase Ventilating Systems

uum is high. The high vacuum overcomes the tension of the spring pressure and seats the valve (Fig. 11). With the valve in this position, all the ventilating air passes through a calibrated orifice in the valve. With the valve seated, there is minimum ventilation. As engine speed increases and manifold vacuum decreases, the spring forces the valve off its seat and to the full open position. This increases the flow of ventilating air.

COOLING SYSTEM

The coolant is drawn from the bottom of the radiator by the water pump which delivers the coolant to the cylinder block (Fig. 12).

The coolant travels through cored passages to cool the entire length of each cylinder wall. Upon reaching the rear of the cylinder block, the coolant is directed upward into the cylinder heads where it cools the combustion chambers, valves, and valve seats on its return to the front of the engine.

The coolant from each cylinder head flows through the water passages in the intake manifold and past the water thermostat, if it is open, into the radiator supply tank. If the thermostat is closed, a small portion of the coolant is returned to the water pump for recirculation. The entire system is pressurized to 12-15 psi.

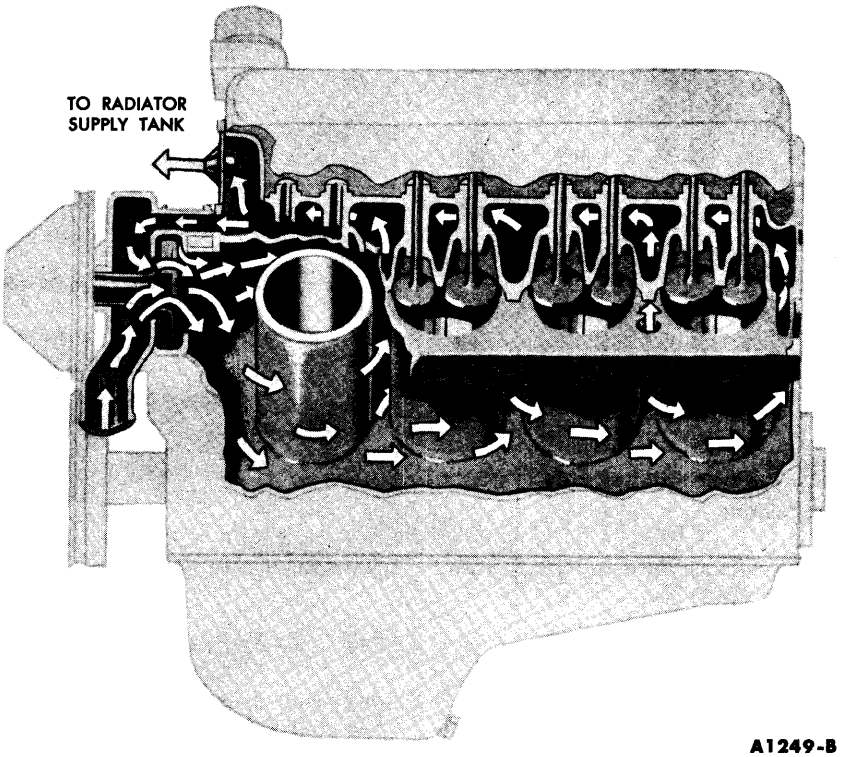

FIG. 12—Cooling System

2 ENGINE TROUBLE DIAGNOSIS

Engine performance complaints usually fall under one of the basic headings listed in the "Engine Trouble Diagnosis Guide." When a particular trouble can not be traced to a definite cause by a simple check, the possible items that could be at fault are listed in the order of their probable occurrence. Check the items in the order listed. For example, under "Poor Acceleration," the ignition system is listed as a probable cause of the trouble. All the ignition system items that affect acceleration are listed. Check all these items before proceeding to the next probable cause.

ENGINE TROUBLE DIAGNOSIS GUIDE

ENGINE WILL NOT CRANK	The cause of this trouble is usually in the starting system (Part 9-2). If the starting system is not at fault, check for a hydrostatic lock or a seized engine as follows: Remove the spark plugs, then attempt to crank the engine with the starter. If the engine cranks, it indicates that water is leaking into the cylinders. Remove the cylinder head(s) and inspect the gaskets(s) and/or head(s) for cracks. Examine the cylinder block for cracks.	
ENGINE CRANKS NORMALLY, BUT WILL NOT START	Check the fuel supply. If there is sufficient fuel in the tank, the cause of the trouble probably lies in either the ignition or the fuel system. To determine which system is at fault, perform the following test: Disconnect a spark plug wire. Check the spark intensity at the end of the wire by installing a terminal adapter in the terminal of the wire to be checked. Hold the adapter approximately 3/16 inch from the exhaust manifold and crank the engine.	**IF THERE IS NO SPARK OR A WEAK SPARK AT THE SPARK PLUGS** The cause of the trouble is in the ignition system.

CONTINUED ON NEXT PAGE

ENGINE TROUBLE DIAGNOSIS GUIDE (Continued)

ENGINE CRANKS NORMALLY, BUT WILL NOT START (Continued)	To determine if the cause of the trouble is in the primary or the secondary circuit, remove the coil high tension lead from the top of the distributor and hold it approximately 3/16 inch from the cylinder head. With the ignition on, crank the engine and check for a spark. If the spark at the coil high tension lead is good, the cause of the trouble is probably in the distributor cap or rotor. If there is no spark or a weak spark at the coil high tension lead, the cause of the trouble is probably in the primary circuit, coil to distributor high tension lead, or the coil. **IF THERE IS A GOOD SPARK AT THE SPARK PLUGS** Check the spark plugs. If the spark plugs are not at fault, check the following items: **AUTOMATIC CHOKE** Check the position of the choke plate. If the engine is hot, the plate should be open. If the plate is not open, the engine will load up due to the excessively rich mixture and will not start. If the engine is cold, the plate should be closed. If the plate is not operating properly, check the following items: The choke linkage for binding.	The fast idle cam for binding. Thermostatic spring housing adjustment. **FUEL SUPPLY AT THE CARBURETOR** Work the throttle by hand several times. Each time the throttle is actuated, fuel should spurt from the accelerating pump discharge nozzles. If fuel is discharged by the accelerating pump, the engine is probably flooded, or there is water in the fuel system, or an engine mechanical item is at fault. If fuel is not discharged by the accelerating pump, disconnect the carburetor fuel inlet line at the carburetor. Use a suitable container to catch the fuel. Crank the engine to see if fuel is reaching the carburetor. If fuel is not reaching the carburetor, check: The fuel filter. The fuel pump. The carburetor fuel inlet line for obstructions. The fuel pump flexible inlet line for a collapsed condition. The fuel tank line for obstructions. The fuel tank vent. If fuel is reaching the carburetor, check: The fuel inlet system including the fuel inlet needle and seat assembly, and the float assembly.
ENGINE STARTS, BUT FAILS TO KEEP RUNNING	**FUEL SYSTEM** Idle fuel mixture needles not properly adjusted. Engine idle speed set too low. The choke not operating properly. Float setting incorrect. Fuel inlet system not operating properly. Dirt or water in fuel lines or in the fuel filter.	Carburetor icing. Fuel pump defective. Dirt in the carburetor, not allowing fuel to enter or be discharged from the idle system. **IGNITION SYSTEM** Leakage in the high tension wiring.
ENGINE RUNS, BUT MISSES	Determine if the miss is steady or erratic and at what speed the miss occurs by operating the engine at various speeds under load. **MISSES STEADILY AT ALL SPEEDS** Isolate the miss by operating the engine with one cylinder not firing. This is done by operating the engine with the ignition wire removed from one spark plug at a time, until all	cylinders have been checked. Ground the spark plug wire removed. If the engine speed changes when a particular cylinder is shorted out, that cylinder was delivering power before being shorted out. If no change in the engine operation is evident, the miss was caused by that cylinder not delivering power before being shorted out. In this case, check the: **IGNITION SYSTEM** If the miss is isolated in a particu-

CONTINUED ON NEXT PAGE

ENGINE TROUBLE DIAGNOSIS GUIDE (Continued)

ENGINE RUNS, BUT MISSES (Continued)	lar cylinder, perform a spark test on the ignition lead of that cylinder. If a good spark does not occur, the trouble is in the secondary circuit of the system. Check the spark plug wire and the distributor cap. If a good spark occurs, check the spark plug. If the spark plug is not at fault, a mechanical component of the engine is probably at fault. **ENGINE** Perform a compression test to determine which mechanical component of the engine is at fault. **MISSES ERRATICALLY AT ALL SPEEDS** **EXHAUST SYSTEM** Exhaust system restricted. **IGNITION SYSTEM** Defective breaker points, condenser, secondary wiring, coil, or spark plugs. High tension leakage across the coil, rotor, or distributor cap. **FUEL SYSTEM** Float setting incorrect. Fuel inlet system not operating properly. Dirt or water in fuel lines or carburetor. Restricted fuel filter. **COOLING SYSTEM** Check the cooling system for internal leakage and/or for a condition that prevents the engine from reaching normal operating temperature. **ENGINE** Perform a compression test to determine which mechanical component of the engine is at fault. **MISSES AT IDLE ONLY** **FUEL SYSTEM** Idle fuel mixture needles not properly adjusted. **IGNITION SYSTEM** Excessive play in the distributor shaft. Worn distributor cam. **ENGINE** Perform a compression test to determine which mechanical component of the engine is at fault. **MISSES AT HIGH SPEED ONLY** **FUEL SYSTEM** Power valve clogged or damaged. Low or erratic fuel pump pressure. Fuel inlet system not operating properly. Restricted fuel filter. **COOLING SYSTEM** Engine overheating.
ROUGH ENGINE IDLE	**FUEL SYSTEM** Engine idle speed set too low. Idle fuel mixture needles not properly adjusted. Idle compensator malfunction. Float setting incorrect. Air leaks between the carburetor, spacer, and the manifold and/or fittings. Power valve leaking fuel. Idle fuel system air bleeds or fuel passages restricted. Fuel bleeding from the accelerating pump discharge nozzles. Secondary throttle plates not closing. Improper secondary throttle plate stop adjustment. Leaking fuel pump, lines, or fittings. **IGNITION SYSTEM** Improperly adjusted or defective breaker points. Fouled or improperly adjusted spark plugs. Incorrect ignition timing. Spark plug misfiring. **ENGINE** Loose engine mounting bolts or worn insulator. Cylinder head bolts not properly torqued. Crankcase ventilation regulator valve defective or a restricted exhaust tube.

CONTINUED ON NEXT PAGE

ENGINE TROUBLE DIAGNOSIS GUIDE (Continued)

POOR ACCELERATION	**IGNITION SYSTEM** Incorrect ignition timing. Fouled or improperly adjusted spark plugs. Improperly adjusted or defective breaker points. Distributor not advancing properly. **FUEL SYSTEM** Inoperative accelerating pump inlet ball check. Inoperative accelerating pump discharge ball check. Accelerating pump diaphragm defective. Float setting incorrect. Throttle linkage not properly adjusted.	Accelerating pump stroke not properly adjusted. Leaky power valve, gaskets, or accelerating pump diaphragm. Dirt or corrosion in accelerating system. Distributor vacuum passages in the carburetor blocked. Restricted fuel filter. **BRAKES** Improper adjustment. **TRANSMISSION** Improper band adjustment. Converter One-Way Clutch.
ENGINE DOES NOT DEVELOP FULL POWER, OR HAS POOR HIGH SPEED PERFORMANCE	**FUEL SYSTEM** Restricted air cleaner. Restricted fuel filter. Clogged or undersize main jets and/or low float setting. Clogged or undersize secondary jets. Power valve clogged or damaged. Secondary throttle plates not opening. Fuel pump pressure incorrect. Distributor vacuum passage in the carburetor blocked. **IGNITION SYSTEM** Ignition timing not properly adjusted. Defective coil, condenser, or rotor. Distributor not advancing properly. Excessive play in the distributor shaft. Distributor cam worn. Fouled or improperly adjusted spark plugs.	Improperly adjusted or defective breaker points. **COOLING SYSTEM** Thermostat inoperative or incorrect heat range. Check the cooling system for internal leakage and/or for a condition that prevents the engine from reaching normal operating temperature. **EXHAUST SYSTEM** Restriction in system. **ENGINE** Perform an engine compression test to determine which mechanical component is at fault. One or more camshaft lobes worn beyond wear limit. **TRANSMISSION** Improper band adjustment.

CONTINUED ON NEXT PAGE

ENGINE TROUBLE DIAGNOSIS GUIDE (Continued)

EXCESSIVE FUEL CONSUMPTION	Determine the actual fuel consumption with test equipment installed in the car. If the test indicates that the fuel consumption is not excessive, demonstrate to the owner how improper driving habits will affect fuel consumption. If the test indicates that the fuel consumption is excessive, make a preliminary check of the following items before proceeding to the fuel and ignition systems. **PRELIMINARY CHECKS** **CHASSIS ITEMS** Check: Tires for proper pressure. Front wheel alignment. Brake adjustment. **EXHAUST SYSTEM** System restricted. **ODOMETER** Check calibration. **IGNITION SYSTEM** Check: Distributor breaker points. Ignition timing. **ENGINE** Crankcase ventilation regulator valve defective or restricted exhaust tube.	**FINAL CHECKS** **FUEL SYSTEM** Check: Fuel pump pressure. Engine idle speed. Idle fuel mixture needles for proper adjustment. Automatic choke for proper operation. Fast idle speed screw for proper adjustment. Accelerating pump stroke adjustment. Anti-stall dashpot for proper adjustment. Air cleaner for restrictions. Float setting. Jets for wear and/or damage. Power valve operation. Air bleeds for obstructions. Accelerating pump discharge nozzles for siphoning. Accelerator linkage for binds. Choke adjustment. **IGNITION SYSTEM** Check: Spark plug condition and adjustment. Distributor spark advance operation. **ENGINE** Perform an engine compression test to determine which mechanical component of the engine is at fault. **COOLING SYSTEM** Check thermostat operation and heat range. **TRANSMISSION** Check band adjustment.
ENGINE OVERHEATS	**TEMPERATURE SENDING UNIT AND GAUGE** Unit or gauge defective (not indicating correct temperature), or constant voltage regulator defective. **ENGINE** Cylinder head bolts not properly torqued.	Low oil level or incorrect viscosity oil used. **COOLING SYSTEM** Insufficient coolant. Cooling system leaks. Drive belt tension incorrect. Radiator fins obstructed.

CONTINUED ON NEXT PAGE

ENGINE TROUBLE DIAGNOSIS GUIDE (Continued)

ENGINE OVERHEATS (Continued)	Thermostat defective. Thermostat improperly installed. Cooling system passages blocked. Water pump inoperative.	Faulty fan drive. **IGNITION SYSTEM** Incorrect ignition timing.
LOSS OF COOLANT	**COOLING SYSTEM** Leaking radiator. Loose or damaged hose connections. Water pump leaking. Radiator cap defective. Overheating. **ENGINE** Cylinder head gasket defective.	Intake manifold to cylinder head gasket defective. Cylinder head or intake manifold bolts not properly torqued. Cylinder block core plugs leaking. Temperature sending unit leaking. Cracked cylinder head or block, or warped cylinder head or block gasket surface.
ENGINE FAILS TO REACH NORMAL OPERATING TEMPERATURE	**TEMPERATURE SENDING UNIT AND GAUGE** Unit or gauge defective (not indicating correct temperature) or constant voltage regulator defective.	**COOLING SYSTEM** Thermostat inoperative or of incorrect heat range.
NOISY HYDRAULIC VALVE LIFTER	A noisy valve lifter can be located by operating the engine at idle speed and placing a finger on the face of the valve spring retainer. If the lifter is not functioning properly, a shock will be felt when the valve seats. Another method of identifying a noisy lifter is by the use of a piece of hose. With the engine operating at idle speed, place one end of the hose near the end of the valve stem and the other end to the ear and listen for a metallic noise. Repeat this procedure on each intake and exhaust valve until the noisy lifter(s) has been located. The most common causes of hydraulic valve lifter troubles are dirt, gum, varnish, carbon deposits, and air bubbles. Dirt in the lifter assembly can prevent the disc valve from seating, or it may become lodged between the plunger and body surfaces. In either case, the lifter becomes inoperative due to failure to "pump-up," or because the internal parts are no	longer free to function properly. When dirt is found to be responsible for lifter malfunction, remove the lifter assembly and thoroughly clean it. Recommended engine oil and filter change intervals should be followed to minimize lifter problems caused by dirt. Deposits of gum and varnish cause similar conditions to exist which may result in lifter malfunction. If these conditions are found to be present, the lifter should be disassembled and cleaned in solvent to remove all traces of deposits. Air bubbles in the lubricating oil, caused by an excessively high or low oil level, may likewise cause lifter malfunction. A damaged oil pick-up tube may allow air to be drawn into the lubricating system. To check for the presence of air, remove a valve rocker arm cover and note the condition of the oil as it flows from the valve rocker arm shaft assembly. Perform corrective action as required to remove air from the lubricating oil.

3 ENGINE TESTS AND ADJUSTMENTS

CAMSHAFT LOBE LIFT

1. Remove the air cleaner and the valve rocker arm cover. Remove the valve rocker arm shaft assembly and install a solid tappet-type push rod in the push rod bore of the camshaft lobe to be checked.

2. Make sure the push rod is in the lifter push rod cup. Install a dial indicator in such a manner as to have the actuating point of the indicator in the push rod socket and in the same plane as the push rod movement (Fig. 13).

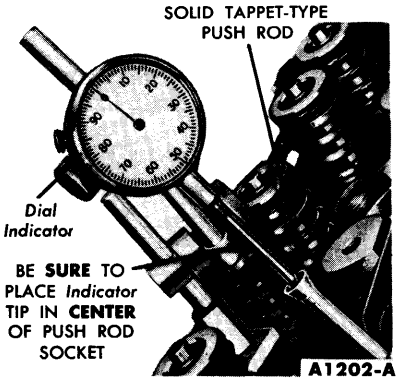

FIG. 13—Camshaft Lobe Lift

3. Turn the crankshaft damper slowly in the direction of rotation until the lifter is on the base circle of the camshaft lobe. At this point, the push rod will be in its lowest position.

4. Zero the dial indicator.

5. Continue to rotate the damper slowly until the push rod is in the fully raised position.

6. Compare the total lift recorded on the indicator with specifications.

7. To check on the accuracy of the original indicator reading, continue to rotate the crankshaft until the indicator reads zero.

8. Remove the dial indicator.

9. Install the valve rocker arm shaft. Install the rocker arm cover and the air cleaner.

VALVE CLEARANCE

A 0.060-inch shorter push rod (color coded white) or a 0.060-inch longer push rod (color coded yellow) are available for service to provide a means of compensating for dimensional changes in the valve mechanism. Valve stem to valve rocker arm clearance should be 0.078-0.218 inch with the hydraulic lifter completely collapsed. Repeated valve reconditioning operations (valve and/or valve seat refacing) will decrease this clearance to the point that if not compensated for, the hydraulic valve lifter will cease to function.

To determine whether a shorter or a longer push rod is necessary, make the following check:

1. Position the crankshaft as outlined in steps 5 and 6.

2. Position the hydraulic lifter compressor tool on the rocker arm and slowly apply pressure to bleed down the hydraulic lifter until the plunger is completely bottomed (Fig. 14). Hold the lifter in the fully collapsed position.

3. Insert the correct end of the clearance gauge between the valve stem and the rocker arm of the valve being checked.

4. If the first step of the gauge enters, a standard length push rod may be used.

If the first step of the gauge does not enter, replace the standard push rod with a 0.060-inch shorter service push rod.

If the second step of the gauge enters, the operating range of the lifter is excessive. This indicates that the incorrect push rod has been installed or severe wear has occurred at the push rod ends, rocker arm, or valve stem. In this case, it will be necessary to determine the area of discrepancy and the incorrect or defective part(s) should be replaced.

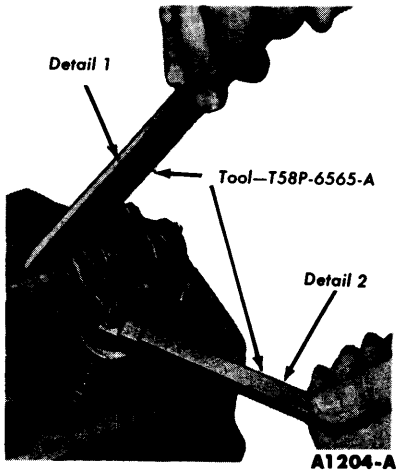

FIG. 14—Valve Clearance

If all the valve train components except the push rod are within limits, install a 0.060-inch longer push rod.

5. Rotate the crankshaft until No. 1 piston is on TDC at the end of the compression stroke. With No. 1 piston on TDC, check the following valves:

No. 1 Intake	No. 1 Exhaust
No. 3 Intake	No. 4 Exhaust
No. 7 Intake	No. 5 Exhaust
No. 8 Intake	No. 8 Exhaust

6. Position No. 6 piston on TDC and check the following valves:

No. 2 Intake	No. 2 Exhaust
No. 4 Intake	No. 3 Exhaust
No. 5 Intake	No. 6 Exhaust
No. 6 Intake	No. 7 Exhaust

When compressing the valve spring to remove push rods, be sure the piston in the individual cylinder is below TDC to avoid contact between the valve and the piston.

To replace a push rod, it will be necessary to remove the valve rocker arm shaft assembly.

Upon replacement of a valve push rod and/or valve rocker arm shaft assembly, the engine should not be cranked or rotated until the hydraulic lifters have had an opportunity to leak down to their normal operating position. The leak-down rate can be accelerated by using the tool shown in Fig. 14 on the valve rocker arm and applying pressure in a direction to collapse the lifter.

MANIFOLD VACUUM TEST

A manifold vacuum test aids in determining the condition of an engine and also in helping to locate the cause of poor engine performance. To test manifold vacuum:

1. Operate the engine for a minimum of 30 minutes at 1200 rpm.

2. Install an accurate, sensitive vacuum gauge in the fitting in the intake manifold.

3. Operate the engine at recommended idle rpm, with the transmission selector lever in neutral.

4. Check the vacuum reading on the gauge.

TEST CONCLUSIONS

Manifold vacuum is affected by carburetor adjustment, valve timing, the condition of the valves, cylinder

compression, and leakage of the manifold, carburetor, carburetor spacer, or cylinder head gaskets.

Because abnormal gauge readings may indicate that more than one of the above factors is at fault, exercise caution in analyzing an abnormal reading. For example, if the vacuum is low, the correction of one item may increase the vacuum enough to indicate that the trouble has been corrected. It is important, therefore, that each cause of an abnormal reading be investigated and further tests conducted where necessary in order to arrive at the correct diagnosis of the trouble.

Table 2 lists various types of readings and their possible causes.

Allowance should be made for the effect of altitude on the gauge reading. The engine vacuum will decrease with an increase in altitude.

TABLE 2—Manifold Vacuum Gauge Readings

Gauge Reading	Engine Condition
18 inches	Normal.
Low and steady.	Loss of power in all cylinders caused possibly by late ignition or valve timing, or loss of compression due to leakage around the piston rings.
Very low.	Manifold, carburetor, spacer, or cylinder head gasket leak.
Needle fluctuates steadily as speed increases.	A partial or complete loss of power in one or more cylinders caused by a leaking valve, cylinder head or intake manifold gasket leak, a defect in the ignition system, or a weak valve spring.
Gradual drop in reading at engine idle.	Excessive back pressure in the exhaust system.
Intermittent fluctuation.	An occasional loss of power possibly caused by a defect in the ignition system or a sticking valve.
Slow fluctuation or drifting of the needle.	Improper idle mixture adjustment, carburetor, spacer, or intake manifold gasket leak, or possibly late valve timing.

COMPRESSION TEST

1. Be sure the battery is properly charged. Operate the engine for a minimum of 30 minutes at 1200 rpm. Turn the ignition switch off, then remove all the spark plugs. Remove the coil high tension lead at the distributor cap.

2. Set the primary throttle plates and choke plate in the wide open position.

3. Install a compression gauge in No. 1 cylinder.

4. Using a remote starter switch, crank the engine several times and record the highest reading recorded. Note the number of compression strokes required to obtain the highest reading.

5. Repeat the test on each cylinder, cranking the engine the same number of times for each cylinder as was required to obtain the highest reading on the No. 1 cylinder.

TEST CONCLUSIONS

A variation of ± 20 pounds from specified pressure is satisfactory. However, the compression of all cylinders should be uniform within 10 pounds.

A reading of more than the allowable tolerance above normal indicates excessive deposits in the cylinder.

A reading of more than the allowable tolerance below normal indicates leakage at the cylinder head gasket, piston rings, or valves.

A low even compression in two adjacent cylinders indicates a cylinder head gasket leak. This should be checked before condemning the rings or valves.

To determine whether the rings or the valves are at fault, squirt the equivalent of a tablespoon of heavy oil into the combustion chamber. Crank the engine to distribute the oil and repeat the compression test. The oil will temporarily seal leakage past the rings. If approximately the same reading is obtained, the rings are satisfactory, but the valves are leaking. If the compression has increased 10 pounds or more over the original reading, there is leakage past the rings.

During a compression test, if the pressure fails to climb steadily and remains the same during the first two successive strokes, but climbs higher on the succeeding strokes, or fails to climb during the entire test, it indicates a sticking valve.

4 ENGINE REMOVAL AND INSTALLATION

The procedures given are for the engine without the transmission attached. If the engine and transmission are removed as an assembly, install standard eye bolts with ½ 14 threads in the bosses at the top rear of the exhaust manifolds. Then attach the engine lifting bracket and sling to the eye bolts. The engine installation is shown in Fig. 15.

REMOVAL

1. Drain the cooling system and the crankcase. Remove the hood and the air cleaner.

2. Disconnect the radiator upper hose at the radiator supply tank and the radiator lower hose at the water pump.

3. Disconnect the transmission oil cooler lines at the radiator. Remove the radiator and support as an assembly.

4. Disconnect the battery ground cable at the generator mounting bracket. Remove the oil level dipstick and the ignition coil.

5. Disconnect the oil pressure sending unit wire at the sending unit

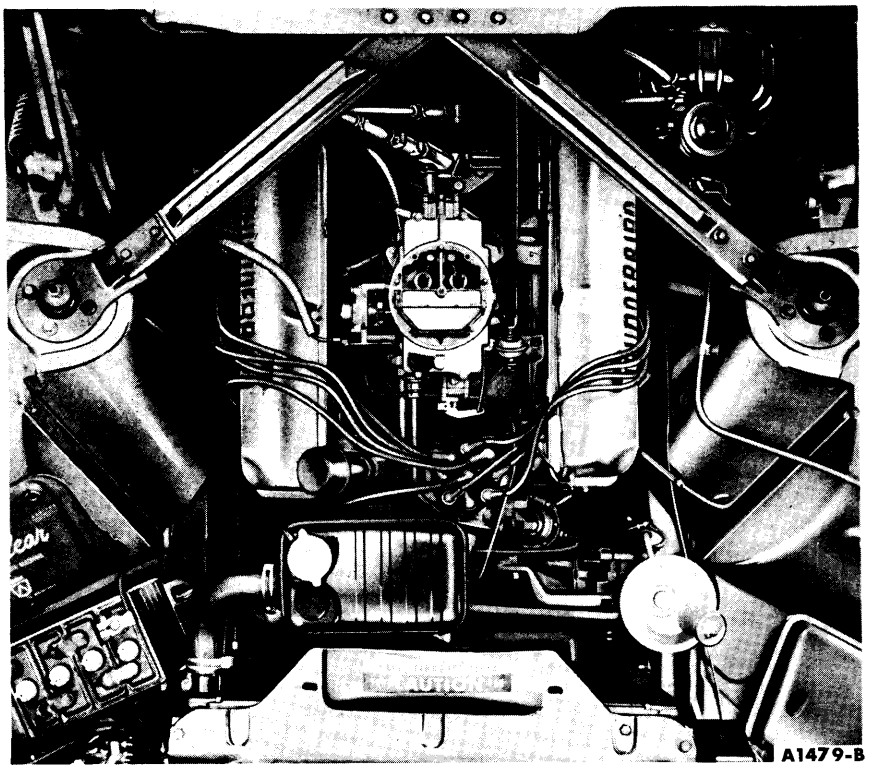

FIG. 15—Engine Installation

and the flexible fuel line at the fuel tank line.

6. Remove the wire loom from the clips on the left valve rocker arm cover and position the wires out of the way.

7. Disconnect the three windshield washer lines at the washer pump and position them out of the way.

8. Disconnect the accelerator rod at the carburetor. Remove the accelerator retracting spring. Remove the accelerator cross shaft bracket from the intake manifold and position it out of the way.

9. Disconnect the power steering pump bracket from the water pump, then wire the power steering pump to the hood left hinge in a position that will prevent the oil from draining out.

10. Disconnect the power brake line at the intake manifold and at the flexible line. Release the line from the brackets on the left valve rocker arm cover and remove the line.

On a car with an air conditioner, disconnect the magnetic clutch wire. Isolate the compressor.

11. Disconnect the heater hose at the water pump and at the intake manifold.

12. Disconnect the generator wires at the generator.

13. Disconnect the water temperature sending unit wire at the sending unit.

14. Remove the engine ground strap. Remove the starter cable retaining bracket from the generator mounting bracket.

15. Raise the front of the car.

16. Remove the starter and dust seal and the transmission fluid filler tube bracket.

17. Disconnect the muffler inlet pipes from the exhaust manifolds, and the engine right and left support insulators at the engine.

18. Remove the converter housing lower access cover and the cover assembly. Remove the flywheel to converter nuts. Secure the converter assembly in the housing. Remove the converter housing to engine lower bolts, and remove the oil cooler lines retaining clamp from the engine block.

19. Lower the car, then support the transmission. Remove the converter housing upper retaining bolts.

20. Install the engine left lifting bracket on the front of the left cylinder head where the coil mounts.

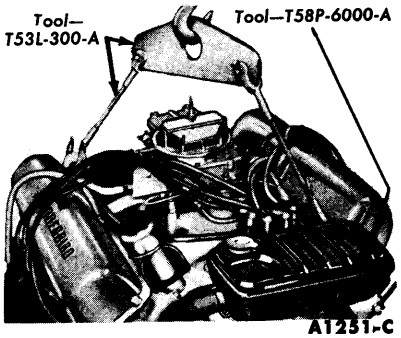

FIG. 16—Engine Lifting Brackets and Sling

Install the engine right lifting bracket at the rear of the right cylinder head. Attach the engine lifting sling (Fig. 16).

21. Raise the engine slightly and carefully pull it from the transmission.

22. Lift the engine out of the engine compartment and install it on a work stand (Fig. 17).

INSTALLATION

1. Place a new gasket over the studs of the exhaust manifolds.

2. Attach the engine lifting brackets and sling (Fig. 16). Remove the engine from the work stand.

3. Lower the engine carefully into the engine compartment. Make sure the exhaust manifolds are properly aligned with the muffler inlet pipes and the dowels in the block engage the holes in the converter housing. Start the converter pilot into the crankshaft.

4. Install the converter housing upper bolts. Torque the bolts to specifications.

5. Start the engine right and left support insulator to engine bolts.

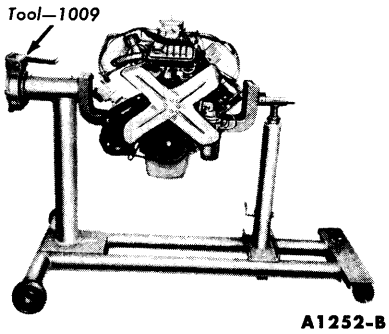

FIG. 17—Engine Work Stand

Disconnect the engine lifting sling and remove the lifting brackets.

6. Raise the front of the car. Install the converter housing lower retaining bolts. Torque the bolts to specifications.

7. Remove the retainer securing the converter in the housing. Install the flywheel to converter lock washers and nuts. Torque the nuts to specifications. Install the converter lower access plate and the housing cover assembly. Install the oil cooler lines retaining clamp.

8. Torque the engine front support insulator bolts to specifications.

9. Connect both exhaust manifolds to the muffler inlet pipes. Torque the nuts to specifications.

10. Position the dust seal and install the starter and the transmission fluid filler tube bracket.

11. Remove the support from the transmission and lower the car.

12. Connect the generator wires.

13. Connect the water temperature sending unit wire. Connect the heater hose at the intake manifold.

14. Connect the engine ground strap. Install the starter cable retaining clamp.

15. Connect the flexible fuel line, the oil pressure sending unit wire, and the windshield wiper vacuum line.

16. Install the ignition coil and connect the coil primary and high tension wires.

17. Install the oil level dipstick.

18. Position the wire loom in the retaining clips on the left valve rocker arm cover.

19. Connect the windshield washer pump lines.

20. Install the accelerator cross shaft bracket and the accelerator retracting spring. Connect the accelerator rod.

21. Connect the power steering pump bracket to the water pump.

22. Connect the power brake line to the intake manifold and to the flexible line. Install the line in the retaining clips on the left valve rocker arm cover.

On a car with an air conditioner, connect the magnetic clutch wire and the compressor lines.

23. Install the radiator and support as an assembly. Connect the radiator upper and lower hoses. Connect the transmission oil cooler lines.

24. Fill and bleed the cooling system. Connect the heater hose at the water pump.

25. Fill the crankcase with the proper grade and quantity of engine oil.

26. Operate the engine at fast idle and check all gaskets and hose connections for leaks.

27. Adjust the transmission control linkage. Install the air cleaner.

28. Install and adjust the hood.

5 IN-CHASSIS REPAIR OPERATIONS

ENGINE SUPPORTS

The front supports are located on each side of the crankcase and the rear support is located at the transmission extension housing.

ENGINE FRONT SUPPORT

The engine front support is shown in Fig. 18. The procedures given apply to either a right or left installation.

Removal

1. Remove the insulator assembly to engine retaining bolts, and insulator to underbody retaining nut.

If only one support is being removed, loosen the other support.

2. Raise the engine about 1 inch with a jack and a block of wood placed under the oil pan, then remove the insulator assembly.

Installation

1. Position the insulator assembly. Install, but do not tighten, the insulator to engine lock washers and bolts. If both supports have been removed, install the bolts on the opposite side before proceeding with step 2.

2. Lower the engine, then install the underbody to insulator nut. Torque the nut and bolts to specifications.

ENGINE REAR SUPPORT

The engine rear support is shown in Fig. 19.

Removal

1. Remove the support retainer bolts and washers and remove the retainer.

2. Raise the extension housing slightly to relieve the pressure on the support assembly. Remove the support assembly.

Installation

1. Raise the extension housing enough to position the support assembly and retainer. Install the support retainer to extension housing washers and bolts. Torque the support retainer bolts to specifications.

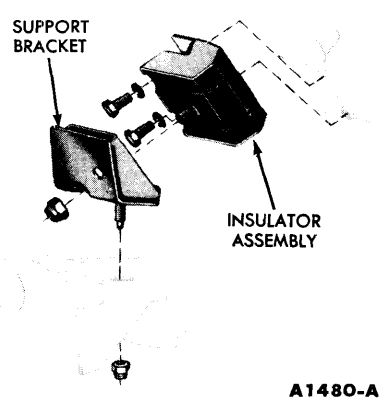

FIG. 18—Engine Front Support

VALVE ROCKER ARM SHAFT ASSEMBLY

REMOVAL

1. Remove the air cleaner.

2. Disconnect the spark plug wires at the spark plugs. Remove the wires from the bracket on the valve rocker arm cover(s) and position the wires out of the way.

To remove the right valve rocker arm cover, remove the carburetor choke heat tube.

To remove the left valve rocker arm cover, disconnect the brake booster line and position the line out of the way.

3. Remove the valve rocker arm cover(s).

If the left cover is removed, position the wire loom out of the way.

4. Crank the engine until the No. 1 piston is at TDC, at the end of the compression stroke. Rotate the crankshaft damper an additional 45° (identified by "XX" on the damper).

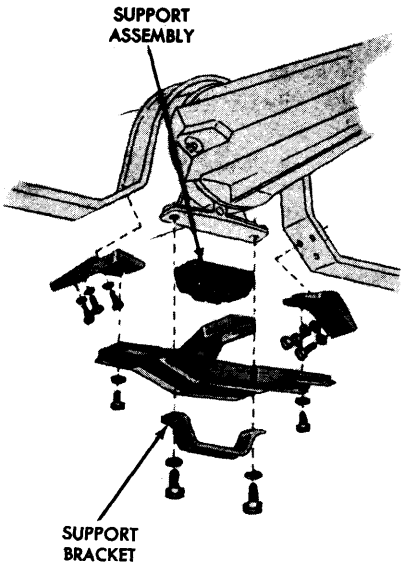

FIG. 19—Engine Rear Support

5. Starting at the No. 4 cylinder, loosen the right valve rocker arm shaft support bolts in sequence, two turns at a time. After the bolts are all loosened, remove the valve rocker arm shaft assembly and the oil baffle plate. Starting at the No. 5 cylinder, follow the same procedure on the left valve rocker arm shaft support bolts. **This procedure must be followed to avoid damage to the valve mechanism.**

INSTALLATION

1. Apply Lubriplate to the pad end of the rocker arms, to the tip of the valve stems, and to both ends of the push rods.

2. Crank the engine until the No. 1 piston is on TDC at the end of the compression stroke.

3. Rotate the crankshaft damper an additional 45° (identified by "XX" on the damper).

4. Position the baffle plate and the valve rocker arm shaft assembly on the cylinder heads with the valve push rods in place and the rocker shaft support bolts finger-tight. **Be sure the shaft is turned so that the oil holes are to the bottom.**

5. Starting at the No. 4 cylinder, tighten the bolts in sequence, two turns at a time, until the supports fully contact the cylinder head. Torque the bolts in sequence to specifications.

6. Starting at the No. 5 cylinder, follow the same procedure for the left valve rocker arm shaft support bolts. The additional time consumed in this procedure will permit the hydraulic lifters to leak down. This will minimize the possibility of bending the push rods, valves, or the rocker arms. **Be sure that the hydraulic lifters have leaked down to their normal operating position before cranking the engine. This is necessary in order to avoid possible damage to the valves, push rods, or valve rocker arms.**

7. Clean the valve rocker arm cover(s). Apply oil resistant sealer to one side of new cover gasket(s). Lay the cemented side of the gasket(s) in place in the cover(s).

8. Position the cover(s) on the cylinder head(s). Make sure the gasket seats evenly all around the head. Install the bolts (and the wire loom clamps on the left cover). The cover is tightened in two steps. First, torque the bolts to specifications. Two minutes later, torque the bolts to the same specifications.

If the left cover was removed, connect the brake booster vacuum line.

If the right cover was removed, install the carburetor choke heat tube.

9. Connect the spark plug wires. Install the air cleaner.

DISASSEMBLY

1. Remove the cotter pins from each end of the valve rocker arm shaft. Remove the flat washer and spring washer from each end of the shaft.

2. Slide the rocker arms, springs, and the supports off the shaft. Be sure to identify all the parts.

3. If it is necessary to remove the plugs from each end of the shaft, drill or pierce one plug. Insert a steel rod through the plug and knock out the plug on the opposite end. Working from the open end, knock out the remaining plug.

ASSEMBLY

1. Oil all the moving parts with engine oil. Apply Lubriplate to the pad of the valve rocker arms.

2. If the plugs were removed from the ends of the shaft, use a blunt tool or large diameter pin punch and install a plug, cup side out, in each end of the rocker arm shaft.

3. Install the rocker arms, supports, and springs in the order shown

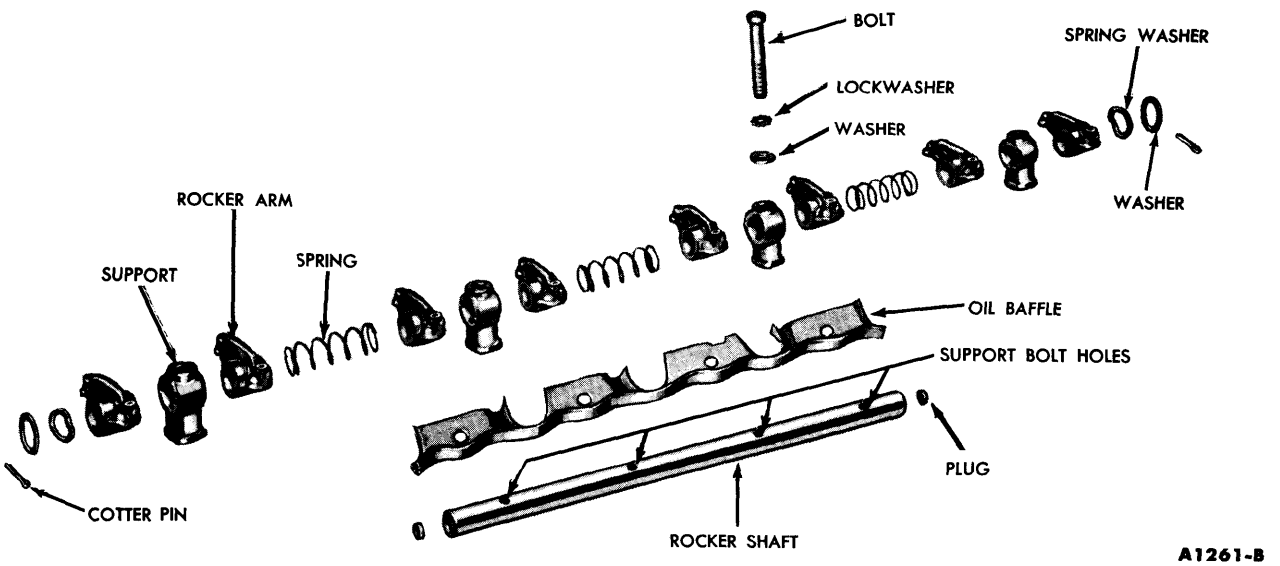

FIG. 20—Valve Rocker Arm Shaft Assembly

in Fig. 20. **Be sure the oil holes in the shaft are facing downward.** Complete the assembly by installing the remaining flat washer and the spring washer and install the cotter pin.

CLEANING AND INSPECTION

Clean all the parts thoroughly. Make sure that all oil passages are open.

Check the clearance between each rocker arm and the shaft by checking the ID of the rocker arm bore and the OD of the shaft. If the clearance between any rocker arm and the shaft exceeds the wear limit, replace the shaft and/or the rocker arm. Inspect the shaft and the rocker arm bore for nicks, scratches, scores, or scuffs. Dress up minor surface defects with a hone.

Inspect the pad at the valve end of the rocker arms for a grooved radius. If the pad is grooved, replace the rocker arm. **Do not attempt to true this surface by grinding.**

Check for broken locating springs.

INTAKE MANIFOLD

REMOVAL

1. Drain the cooling system. Remove the air cleaner.

2. Disconnect the accelerator rod at the carburetor. Remove the accelerator cross shaft bracket from the intake manifold and position it out of the way.

3. Remove the carburetor fuel inlet line and the automatic choke heat tube. Disconnect the brake vacuum booster line at the intake manifold and at the flexible hose. Remove the vacuum line.

4. Disconnect the coil high tension lead, and the coil wires at the coil. Disconnect the oil pressure sending unit wire at the sending unit. Remove the wire loom from the retaining clips on the left valve rocker arm cover and position it out of the way.

5. Disconnect the spark plug wires at the spark plugs and remove the wires from the ignition harness brackets on the valve rocker arm covers.

6. Remove the distributor cap and spark plug wire assembly. Disconnect the distributor vacuum line at the distributor.

7. Remove the distributor hold-down bolt and clamp. Remove the distributor.

8. Disconnect the radiator upper hose at the radiator supply tank, then remove the supply tank. Remove the heater hose at the intake manifold, and the water temperature sending unit wire at the sending unit.

9. Slide the clamp on the water pump by-pass hose toward the water pump.

10. Clean the outside of the valve rocker arm covers and remove the covers.

11. Refer to "Valve Rocker Arm Shaft Assembly Removal" and remove the valve rocker arm shaft assembly by following steps 4 and 5.

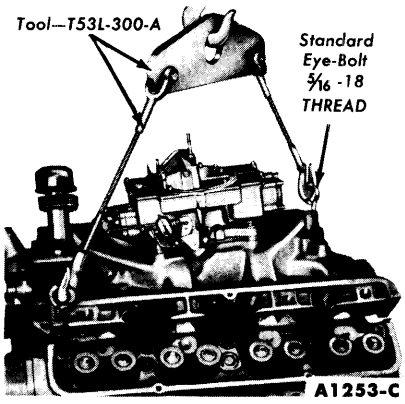

FIG. 21—Intake Manifold Removal or Installation

12. Remove the valve push rods in sequence.

13. Remove the intake manifold retaining bolts.

14. Install standard eye bolts with 5/16-18 threads in the left front and right rear rocker arm cover screw holes. Attach the engine lifting sling (Fig. 21).

15. Raise the manifold and carefully remove the intake manifold and radiator supply tank as an assembly. Remove the intake manifold gaskets and seals.

16. If the manifold is to be disassembled, remove the radiator supply tank, thermostat, and gasket. Remove the carburetor, spacer, and gasket.

On an engine with positive crankcase ventilation, remove the crankcase ventilation regulator valve and exhaust tube.

INSTALLATION

The intake manifold assembly is shown in Fig. 22.

1. If the intake manifold was disassembled, install the carburetor, spacer, and gasket. Coat the thermostat gasket with water resistant sealer and place it in position on the intake

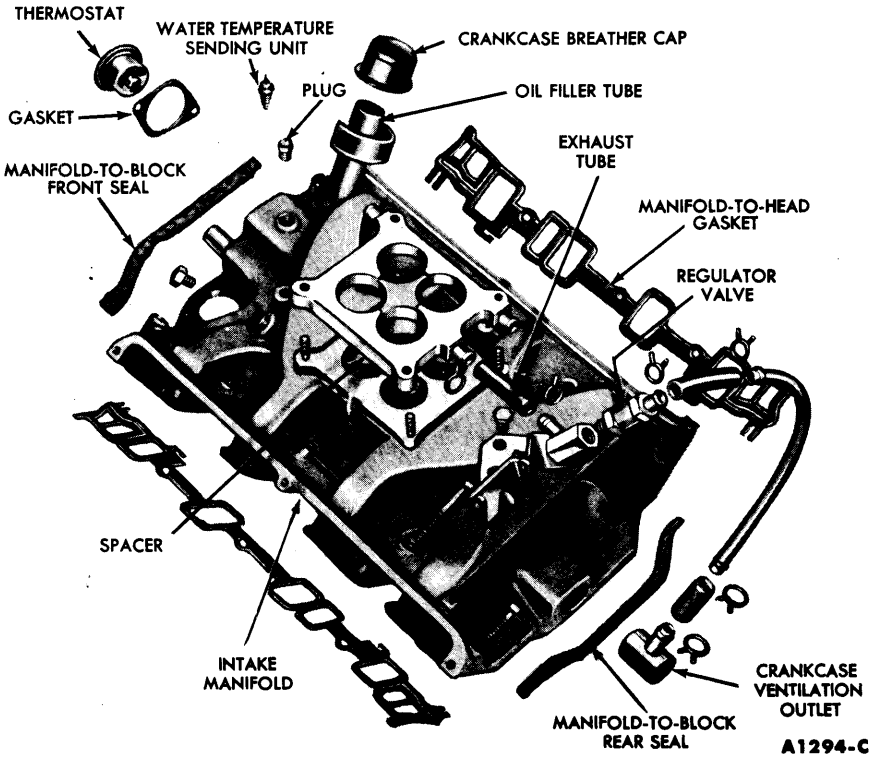

FIG. 22—Typical Intake Manifold Assembly

manifold. Install the thermostat and radiator supply tank.

2. Clean the mating surfaces of the intake manifold, cylinder heads, and cylinder block.

3. Coat the intake manifold and cylinder block seal surfaces with oil resistant sealer.

4. Position new seals on the cylinder block and new gaskets on the cylinder heads. Position the gasket slots in the end tabs over the ribs on the seals. Be sure the holes in the gaskets are aligned with the holes in the cylinder heads. The correct installation of the gaskets and seals is shown in Fig. 23.

5. Install the eye bolts in the intake manifold and attach the engine lifting sling and carefully lower the intake manifold on the engine (Fig. 21).

6. Position the intake manifold by inserting the distributor in place. **After the intake manifold is in place, run a finger around the seal area to make sure the seals are in place. If the seals are not in place, remove the intake manifold and reposition the seals.**

7. Start the water pump by-pass hose on the intake manifold.

8. Be sure the holes in the manifold gaskets and manifold are in alignment. Install the manifold retaining bolts and torque them to specifications, working from the center to the ends.

9. Remove the distributor and the engine lifting sling and eye bolts.

10. Slide the water pump by-pass hose clamp into position. Connect the water temperature sending unit, the heater hose, and the radiator upper hose.

On an engine with positive crankcase ventilation, install the crankcase ventilation regulator valve and exhaust tube.

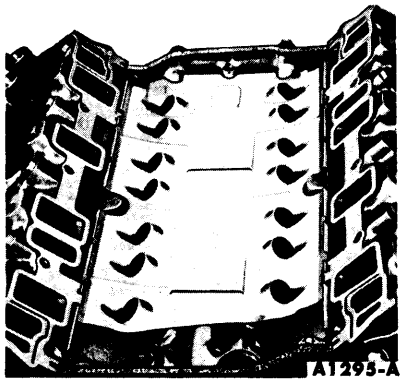

FIG. 23—Intake Manifold Gaskets and Seals Installation

11. Apply Lubriplate to both ends of the push rods. Install the push rods in their original bores, positioning the lower ends of the rods in the lifter cups. Refer to "Valve Rocker Arm Shaft Assembly Installation" and install the valve rocker arm shaft assembly by following steps 1 thru 6.

12. Rotate the crankshaft damper until the No. 1 piston is on TDC at the end of the compression stroke. Position the distributor in the block with the rotor at the No. 1 firing position and the points open. Install the hold down clamp.

13. Clean the valve rocker arm covers. Apply oil resistant sealer to one side of new cover gaskets. Lay the cemented side of the gaskets in place in the covers. Install the valve rocker arm covers.

14. Connect the brake vacuum booster line and connect the flexible hose.

15. Install the carburetor fuel inlet line and connect the distributor vacuum line. Install the automatic choke heat tube.

16. Install the distributor cap. Connect the spark plug wires. Install the wire loom in the retaining clips on the left valve rocker arm cover.

17. Connect the oil pressure sending unit wire, the coil high tension lead, and the coil primary wire.

18. Install the accelerator cross shaft bracket. Connect the accelerator rod.

19. Fill and bleed the cooling system.

20. Start the engine and check and adjust the ignition timing. Operate the engine until engine temperatures have stabilized and adjust the engine idle speed and idle fuel mixture.

21. Adjust the transmission control linkage. Install the air cleaner.

CLEANING AND INSPECTION

Clean the manifold in a suitable solvent, then dry it with compressed air.

Inspect the manifold for cracks, leaks, or other defects that would make it unfit for further service. Replace all studs that are stripped or otherwise damaged. **Remove all filings and foreign matter that may have entered the manifold as a result of repairs.**

Check the baffle plate on the underside of the manifold for looseness and be sure the maze screen is in place. Clean off any varnish accumulation.

EXHAUST MANIFOLD

REMOVAL

1. Remove the air cleaner. Disconnect the exhaust manifold at the muffler inlet pipe.

2. Remove the automatic choke heat tube from the right exhaust manifold.

3. Disconnect the power steering pump bracket from the cylinder block and move it out of the way. Position the pump so that the oil will not drain out. Disconnect the power steering hose bracket and position the hoses out of the way.

4. Remove the dipstick and tube assembly.

5. Remove the retaining bolts and tab washers and remove the exhaust manifolds.

INSTALLATION

1. Clean the mating surfaces of the exhaust manifold and cylinder head. Scrape the gasket material from the mounting flange of the exhaust manifold and muffler inlet pipe.

2. Apply graphite grease to the mating surface of the exhaust manifold.

3. Install a new gasket on the studs of the exhaust manifold.

4. Position the exhaust manifold on the cylinder head and install the retaining bolts and tab washers. Working from the center to the ends torque the retaining bolts to specifications. Lock the bolts by bending one tab of the washer over a flat on the bolt.

5. Install the dipstick and tube assembly.

6. Position the power steering pump bracket on the cylinder block and install the retaining bolts. Adjust the belt tension. Position the hoses and install the power steering hose bracket.

7. Install the automatic choke heat tube on the right exhaust manifold.

8. Connect the exhaust manifold at the muffler inlet pipe. Install the air cleaner.

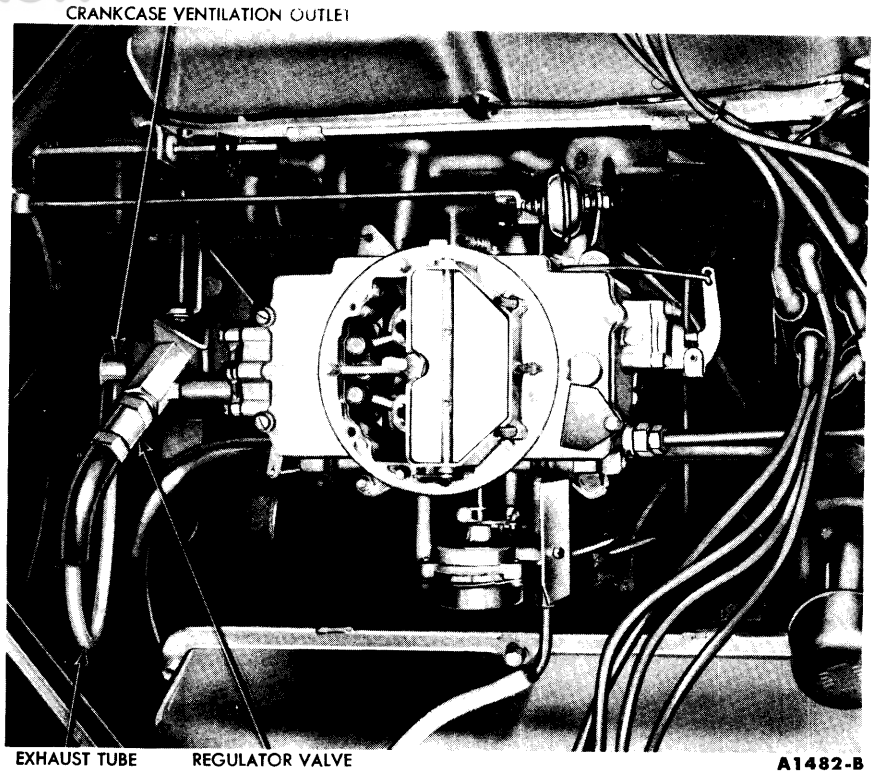

FIG. 24—Regulator Valve and Exhaust Tube

CLEANING AND INSPECTION

Inspect the manifolds for cracks, leaks, or other defects that would make them unfit for further service.

On the right exhaust manifold, clean out the automatic choke air heat chamber (Fig. 5). Make sure the air inlet and outlet holes are completely open and the cover does not leak. Blow out the automatic choke air heat tube with compressed air.

POSITIVE CRANKCASE VENTILATION SYSTEM

REMOVAL

1. Disconnect the exhaust tube at the crankcase ventilation outlet and regulator valve and remove the tube. Remove the exhaust tube that connects to the spacer (Fig. 24).

2. Remove the regulator valve assembly from the Tee-fitting.

3. Remove the outlet adapter from the intake manifold.

INSTALLATION

1. Install the outlet adapter. If the adapter enters the intake manifold more than ½ inch, replace the adapter.

2. Install the regulator valve in the Tee-fitting.

3. Install the exhaust tubes.

REGULATOR VALVE DISASSEMBLY

Place the hex on the regulator valve body in a vise. Remove the connector, valve, and spring (Fig. 25).

CLEANING

Clean the valve parts and exhaust tube in clean carburetor solvent and dry them with compressed air. Clean the rubber hose connections with a low volatility petroleum base solvent and dry with compressed air.

REGULATOR VALVE ASSEMBLY

Position the spring and valve inside the regulator valve body. Install the regulator valve connector.

CYLINDER HEADS AND VALVES

CYLINDER HEAD REMOVAL

1. Remove the intake manifold, carburetor, and radiator supply tank as an assembly following the procedure under "Intake Manifold Removal."

2. Disconnect the exhaust manifolds at the muffler inlet pipes.

If the left cylinder head is to be removed, remove the ignition coil.

3. Remove the cylinder head bolts. Install the cylinder head holding fixtures (Fig. 26).

4. Lift the cylinder heads off the block. **Do not pry between the head and the block.** Remove and discard the cylinder head gasket.

CYLINDER HEAD INSTALLATION

1. Clean the cylinder head and cylinder block gasket surfaces.

2. If the cylinder head was removed for a cylinder head gasket replacement, check the flatness of the cylinder head and block gasket surfaces (Fig. 29).

3. Apply cylinder head gasket sealer to both sides of a new gasket. Guided by the word "FRONT" on the gasket, install the gasket over the cylinder head dowels.

4. Place the cylinder head on the engine, then remove the holding fixtures.

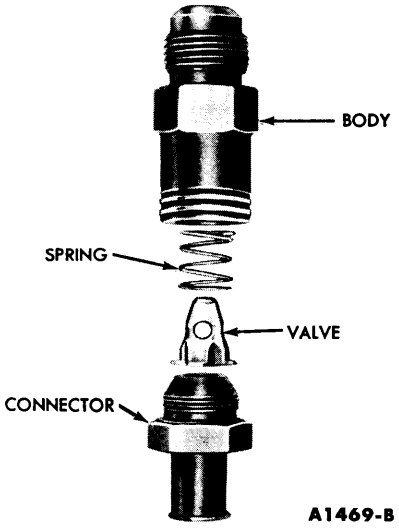

FIG. 25—Regulator Valve Assembly

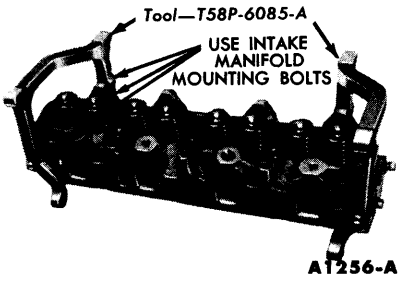

FIG. 26—Cylinder Head Holding Fixtures

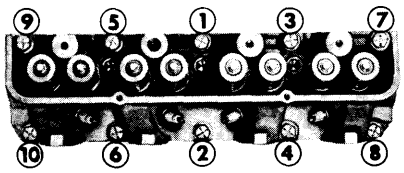

USE Tool—S-8683 A1292-A

FIG. 27—Cylinder Head Bolt Tightening Sequence

5. Install the cylinder head bolts. The cylinder head bolts are tightened in three progressive steps. Torque all the bolts in sequence (Fig. 27) to 70 ft-lbs, then torque them to 80 ft-lbs, and finally to 90 ft-lbs. **After the cylinder head bolts have been torqued to specifications, the bolts should not be disturbed.**

6. Connect the exhaust manifolds to the muffler inlet pipes.

7. Install the intake manifold and related parts following the procedure under "Intake Manifold Installation."

CYLINDER HEAD DISASSEMBLY

1. Install the cylinder head holding fixtures (Fig. 26). Remove the deposits from the cylinder head combustion chambers and valve heads with a scraper and a wire brush before removing the valves. **Be careful not to scratch the cylinder head gasket surface.**

2. Compress the valve spring (Fig. 28). Remove the valve retainer locks and release the spring.

3. Remove the sleeve, spring retainer, spring, damper spring, stem seal, and valve. Discard the valve stem seals. Identify all valve parts.

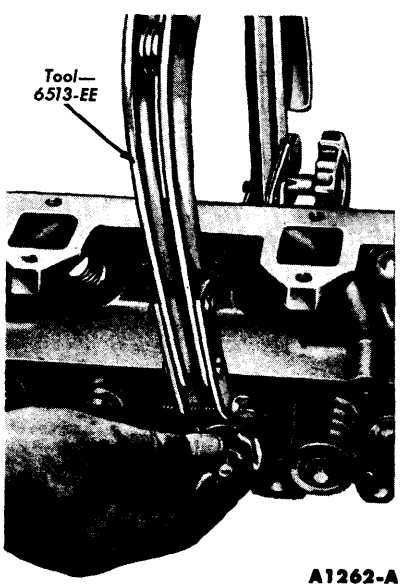

A1262-A

FIG. 28—Compressing Valve Spring

CYLINDER HEAD CLEANING

After the valves are removed, clean the valve guide bores with a valve guide cleaning tool. Use cleaning solvent to remove dirt, grease, and other deposits.

CYLINDER HEAD INSPECTION

Check the cylinder head for cracks, and the gasket surface for burrs and nicks. Replace the head if it is cracked. **Do not plane or grind more than 0.010 inch from the cylinder head gasket surface.** Remove all burrs or scratches with an oil stone.

Cylinder Head Flatness. Check the flatness of the cylinder head gasket surface (Fig. 29).

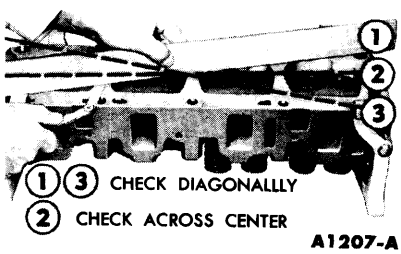

A1207-A

FIG. 29—Cylinder Head Flatness

Valve Seat Runout. Check the valve seat runout with an accurate gauge (Fig. 30). Follow the instructions of the gauge manufacturer. If the runout exceeds the wear limit, reface the valve and valve seat.

Valve Seat Width. Measure the valve seat width (Fig. 31).

Reaming Valve Guides. If it becomes necessary to ream a valve guide (Fig. 32) to install a valve with an oversize stem, a reaming kit is available which contains the following reamer and pilot combinations: a 0.003-inch OS reamer with a standard diameter pilot, a 0.015-inch OS reamer with a 0.003-inch OS pilot, and a 0.030-inch reamer with a 0.015-inch OS pilot.

When going from a standard size valve to an oversize valve, always use the reamers in sequence. **Always reface the valve seat after the valve guide has been reamed.**

Refacing Valve Seats. Refacing of the valve seats should be closely coordinated with the refacing of the valve face so that the finished seat will match the valve face and be centered. This is important so that the valve and seat will have a good compres-

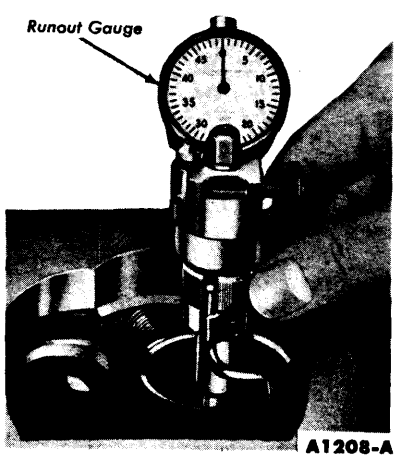

A1208-A

FIG. 30—Valve Seat Runout

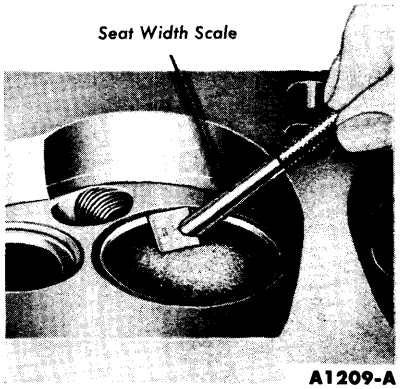

A1209-A

FIG. 31—Valve Seat Width

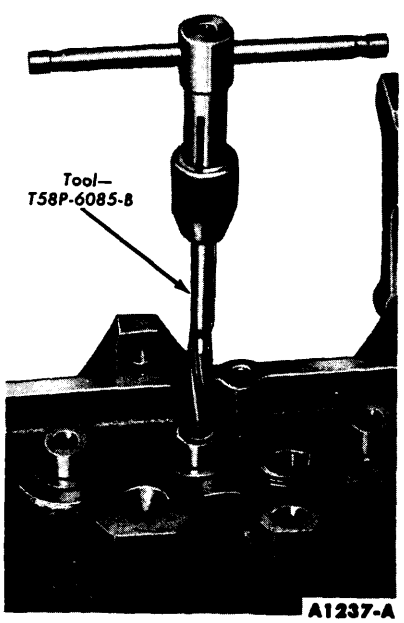

A1237-A

FIG. 32—Reaming Valve Guides

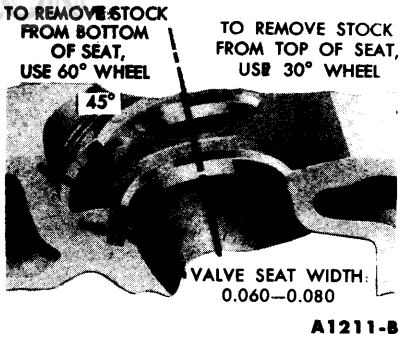

FIG. 33—Intake Valve Seat Refacing

sion tight fit. Be sure that the refacer grinding wheels are properly dressed.

Grind the valve seats to a true 45° angle (Fig. 33). Remove only enough stock to clean up pits, grooves, or to correct the valve seat runout. After the seat has been refaced, measure the seat width (Fig. 31). Narrow the seat, if necessary, to bring it within limits.

If the valve seat width exceeds the maximum limit, remove enough stock from the top edge and/or bottom edge of the seat to reduce the width to specifications (Fig. 33).

Use a 60° angle grinding wheel to remove stock from the bottom of the seat (raise the seat) and use a 30° angle wheel to remove stock from the top of the seat (lower the seat).

The finished valve seat should contact the approximate center of the valve face. It is good practice to determine where the valve seat contacts the face. To do this, coat the seat with Prussian blue, then set the valve in place. Rotate the valve with light pressure. If the blue is transferred to the center of the valve face, the contact is satisfactory. If the blue is transferred to the top edge of the valve face, lower the valve seat. If the blue is transferred to the bottom edge of the valve face, raise the valve seat.

VALVES

Cleaning. Remove all deposits from the valve with a fine wire brush or buffing wheel.

INSPECTION

The critical inspection points and tolerances of the valves are illustrated in Fig. 34.

Inspect the valve face and the edge of the valve head for pits, grooves, scores, or other defects. Inspect the stem for a bent condition and the end of the stem for grooves

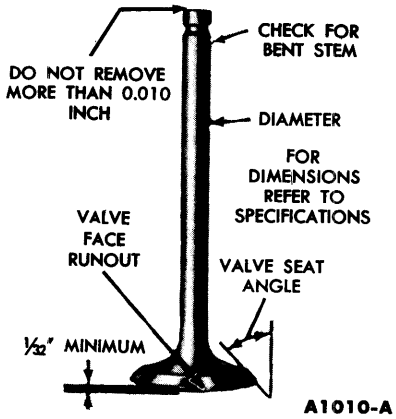

FIG. 34—Critical Valve Tolerances

or scores. Check the valve head for signs of burning, erosion, warpage, and cracking. Defects, such as minor pits, grooves, etc., may be removed. Discard valves that are severely damaged.

Inspect the valve springs, valve spring retainers, locks, and sleeves for defects. Discard any visually defective parts.

Valve Face Runout. Check the valve face runout (Fig. 35). It should not exceed the wear limit.

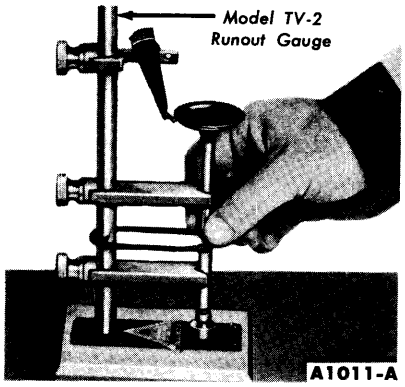

FIG. 35—Valve Face Runout

Valve Stem Clearance. Check the valve stem to valve guide clearance of each valve in its respective valve guide with the tool shown in Fig. 36 or its equivalent. Use a flat-end indicator point.

Valve Spring Pressure. Check the spring for proper pressure (Fig. 37). Do not remove the damper spring when checking the pressure. Weak valve springs cause poor engine performance; therefore, if the pressure of any spring exceeds the wear limit, replace the spring.

Valve Spring Squareness. Check each spring for squareness, using a

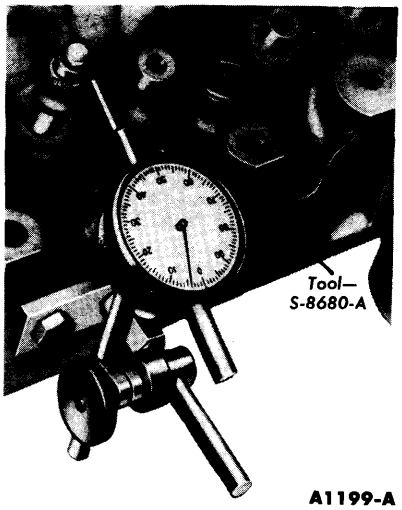

FIG. 36—Valve Stem Clearance

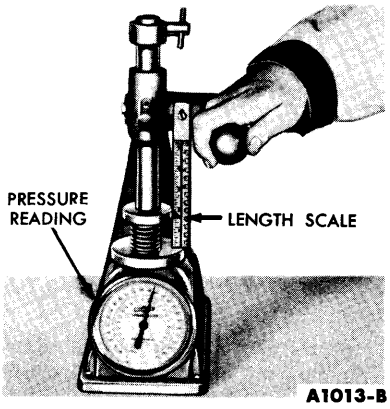

FIG. 37—Valve Spring Pressure

steel square and a surface plate (Fig. 38). Stand the spring and square on end on the surface plate. Slide the spring up to the square. Revolve the spring slowly and observe the space between the top coil of the spring and the square. If the spring is out of square more than 1/16 inch, replace it.

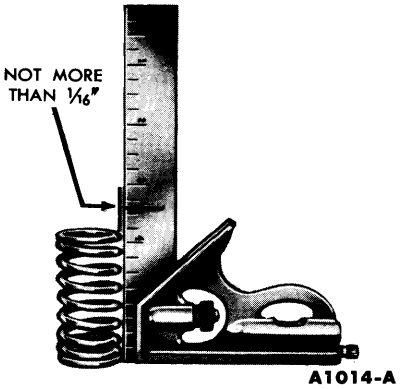

FIG. 38—Valve Spring Squareness

Valve Push Rods. Check the ends of the push rods for nicks, grooves, roughness, or excessive wear.

The push rods can be visually checked for straightness while they are installed in the engine by rotating them with the valve closed. They also can be checked with a dial indicator (Fig. 39). If the runout exceeds the maximum limit at any point, discard the rod. **Do not attempt to straighten push rods.**

Refacing Valves. The valve refacing operation should be closely coordinated with the valve seat refacing operation so that the finished angle of the valve face will match the valve seat. This is important so that the valve and seat will have a good compression tight fit. Be sure that the refacer grinding wheels are properly dressed.

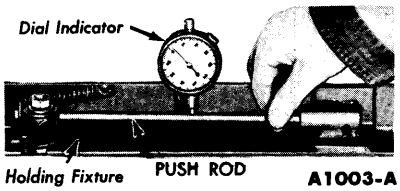

FIG. 39—Push Rod Runout

If the valve face runout is excessive and/or to remove pits and grooves, reface the valves to a true 44° angle. Remove only enough stock to correct the runout or to clean up the pits and grooves. If the edge of the valve head is less than 1/32 inch after grinding, replace the valve as the valve will run too hot in the engine.

Remove all grooves or score marks from the end of the valve stem, then chamfer as necessary. Do not remove more than 0.010 inch from the stem.

After refacing the valves, it is good practice to lightly lap in the valves with a medium grade lapping compound to match the seats. Be sure to remove all the compound from the valve and seat after the lapping operation.

Select Fitting Valves. If the valve stem to valve guide clearance exceeds the wear limit, ream the valve guide for the next oversize valve stem. Valves with oversize stem diameters of 0.003, 0.015, and 0.030 inch are available for service. **Always reface the valve seat after the valve guide has been reamed.**

CYLINDER HEAD ASSEMBLY

1. Install each valve (Fig. 40) in the port from which it was removed or to which it was fitted. Install a new stem seal on the valve.

2. Install the valve springs over the valve, and then install the spring retainer and sleeve. **Make sure the valve damper spring is installed in the valve spring so that the coil end of the damper spring is 135° counterclockwise from the coil end of the valve spring.**

3. Compress the spring and install the retainer locks (Fig. 28).

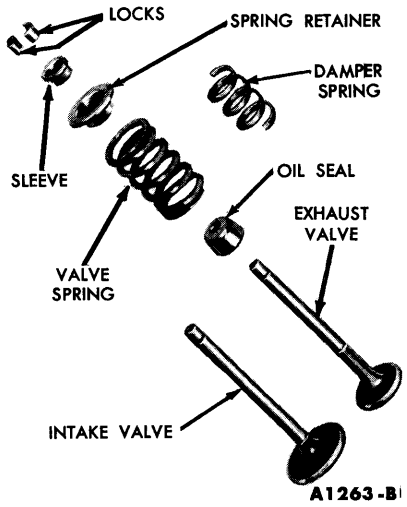

FIG. 40—Valve Assembly

4. Measure the assembled height of the valve spring from the surface of the cylinder head spring pad to the underside of the spring retainer with dividers (Fig. 41). Check the dividers against a scale. If the assembled height is greater than specifications, install the necessary 0.030-inch thick spacer(s) between the cylinder head spring pad and the valve spring to bring the assembled height to the recommended height. **Do not install spacers unless necessary. Use of spacers in excess of recommendations will result in overstressing the valve springs and overloading the camshaft lobes which could lead to spring breakage and worn camshaft lobes.**

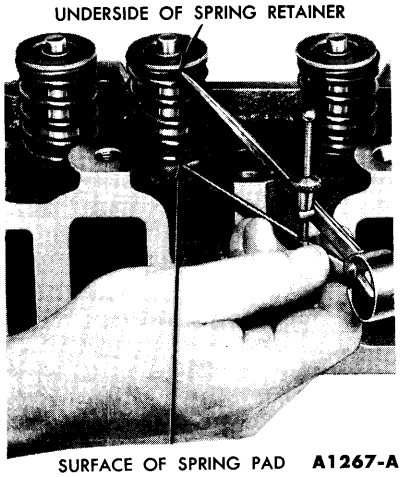

FIG. 41—Valve Spring Assembled Height

VALVE STEM SEAL REPLACEMENT

1. Remove the air cleaner and the valve rocker arm cover. Remove the applicable spark plug.

2. Crank the engine until the applicable piston is on TDC after the compression stroke. Be sure that both valves are closed. **Be sure that the piston is on TDC to prevent the crankshaft from turning when the air is applied.**

3. Install an air line with an adapter in the spark plug hole and turn on the air supply.

4. Position the hydraulic lifter compressor tool on the applicable rocker arm and slowly apply pressure to bleed down the hydraulic lifter until the plunger is completely bottomed (Fig. 42). Remove the push rod.

5. Push the rocker arm to one side and secure it in this position

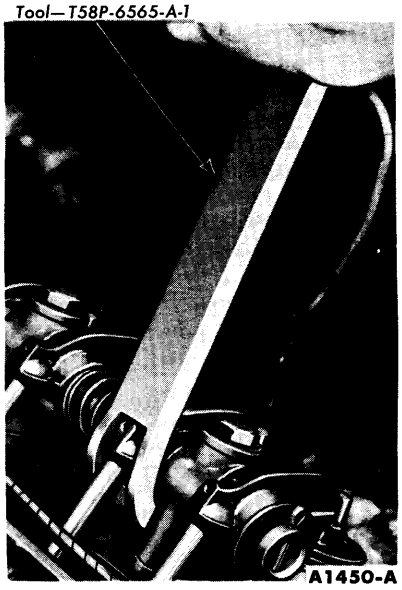

FIG. 42—Bleeding Down Hydraulic Valve Lifter

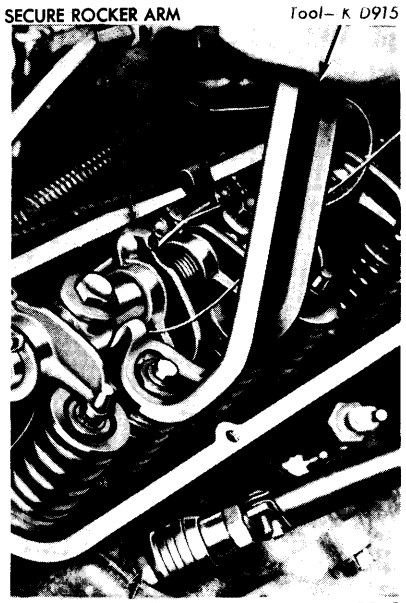

FIG. 43—Compressing Valve Spring

(Fig. 43). Using the valve spring compression tool shown in Fig. 43, compress the valve spring. Remove the valve spring retainer locks, the sleeve, spring retainer, and the valve spring. If an end rocker arm is to be worked on, it will be necessary to remove the rocker arm from the shaft.

6. Remove the valve stem seal (Fig. 44).

7. Install a new valve stem seal. Place the spring in position over the valve. Install the spring retainer and sleeve. Compress the valve spring and install the valve spring retainer locks.

Be sure the damper spring is installed in the valve spring so that the coil end of the damper spring is 135° counterclockwise from the coil end of the valve spring.

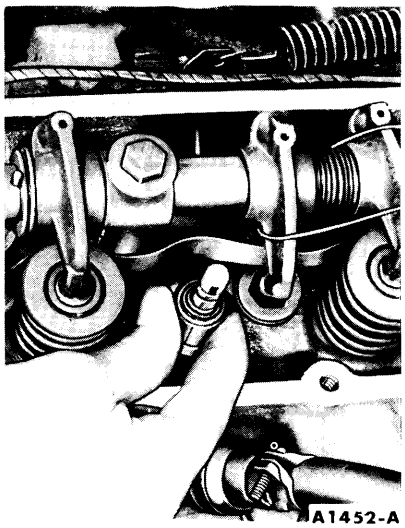

FIG. 44—Valve Stem Seal Removal

8. Apply Lubriplate to both ends of the push rod. Install the push rod making sure the lower end of the rod is positioned in the lifter push rod cup.

9. Remove the wire securing the valve rocker arm and slide the rocker arm into position. Turn off the air and remove the air line and adapter. Install the spark plug.

10. Install the valve rocker arm cover and connect the spark plug wires. Install the air cleaner.

CYLINDER FRONT COVER AND TIMING CHAIN

REMOVAL

1. Drain the cooling system and the crankcase. Remove the air cleaner. Disconnect the battery ground cable.

2. Disconnect the radiator upper hose at the radiator supply tank. Disconnect the radiator lower hose at the water pump.

3. Disconnect the transmission oil cooler lines at the radiator. Remove the radiator and support as an assembly.

4. Disconnect the heater hose at the water pump. Slide the water pump by-pass hose clamp toward the engine.

5. Disconnect the power steering pump bracket from the water pump and remove the drive belt. Wire the power steering pump assembly to the left side of the car in a position that will prevent the oil from draining out.

On a car with an air conditioner, remove the compressor drive belt.

6. Loosen the generator mounting bolts at the generator. Remove the drive belt. Remove the generator support bolt at the water pump. Remove the water pump, drive belt adjusting arm, pulley, and fan as an assembly. Remove the power steering pulley from the crankshaft damper.

7. Remove the cap screw and washer from the end of the crankshaft. Install the puller on the crankshaft damper (Fig. 45) and remove the damper.

8. Disconnect the carburetor fuel inlet line at the fuel pump.

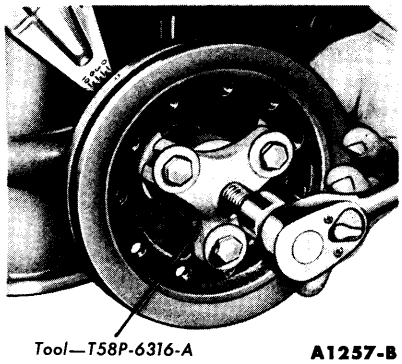

FIG. 45—Crankshaft Damper Removal

9. Remove the fuel pump retaining bolts and lay the pump to one side with the flexible fuel line still attached.

10. If the crankshaft sleeve is not stepped down (the same OD on both ends), remove it as shown in Fig. 46. If the sleeve is stepped down, remove it with a three jawed puller (tool 7675-N).

11. Remove the screws fastening the cylinder front cover to the block. Remove the cylinder front cover. On a car with an air conditioner, the compressor brackets are retained by cylinder front cover screws.

12. Discard the cylinder front cover gasket. Remove the oil slinger.

13. Rotate the crankshaft in a clockwise direction (as viewed from the front) to take up the slack on the left side of the chain.

14. Establish a reference point on the block and measure from this point to the chain (Fig. 47).

15. Rotate the crankshaft in the opposite direction to take up the slack on the right side of the chain. Force the left side of the chain

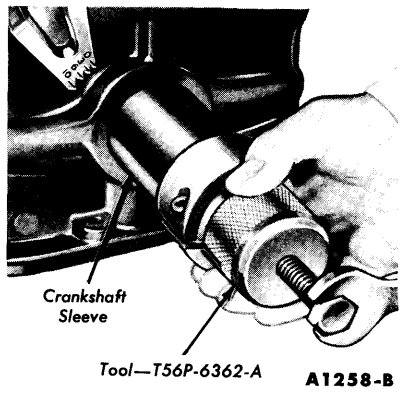

FIG. 46—Crankshaft Sleeve Removal

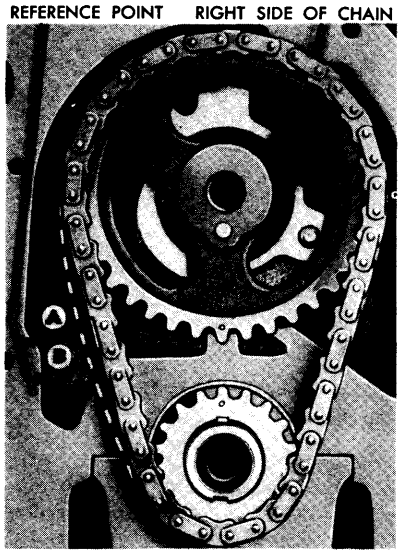

TAKE UP SLACK ON LEFT SIDE, ESTABLISH REFERENCE POINT. MEASURE DISTANCE **A**. TAKE UP SLACK ON RIGHT SIDE. FORCE LEFT SIDE OUT. MEASURE DISTANCE **B**. DEFLECTION IS **A** MINUS **B**. A1284-A

FIG. 47—Timing Chain Deflection

out with the fingers and measure the distance between the reference point and the chain. The deflection is the difference between the two measurements.

If the deflection exceeds ½ inch, replace the timing chain and/or sprockets.

16. Crank the engine until the timing marks on the sprockets are positioned as shown in Fig. 48.

17. Remove the camshaft thrust

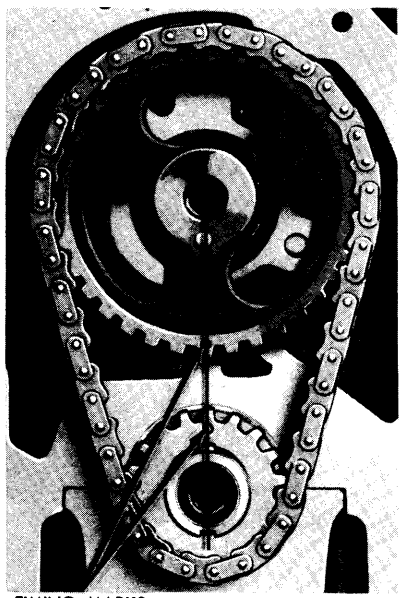

TIMING MARKS A1283-A

FIG. 48—Aligning Timing Marks

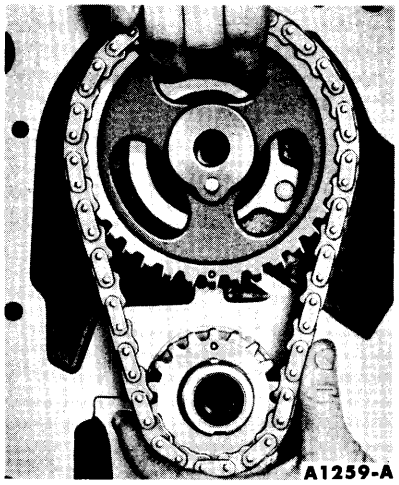

A1259-A

FIG. 49—Timing Chain Removal or Installation

button and spring, the sprocket cap screw, the thrust button spring retainer, and the fuel pump eccentric.

18. Slide both sprockets and the timing chain forward, and remove the sprockets and timing chain as an assembly (Fig. 49).

19. Remove the oil pan and oil pump screen, following the procedure under "Oil Pan Removal."

INSTALLATION

1. Position the sprockets and timing chain on the camshaft and crankshaft (Fig. 49). Be sure the timing marks on the sprockets are positioned as shown in Fig. 48.

2. Install the fuel pump eccentric, the camshaft sprocket cap screw, and

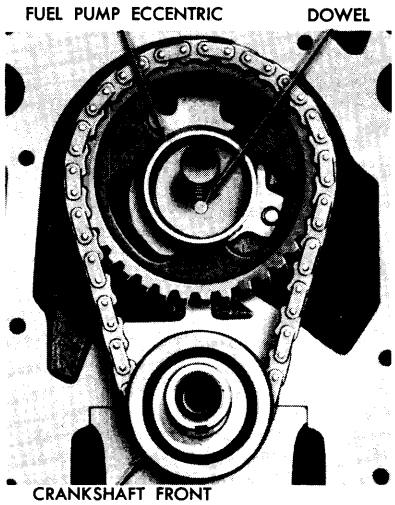

A1285-A

FIG. 50—Fuel Pump Eccentric and Front Oil Slinger Installed

the thrust button spring retainer. Torque the sprocket cap screw to specifications. Install the camshaft thrust button spring and thrust button (Fig. 50). Install the crankshaft front oil slinger.

3. Clean the cylinder front cover, oil pan, and the block gasket surfaces.

4. Coat the gasket surface of the block and cover and the cover bolt threads with sealer. Position a new gasket on the block.

5. Install the alignment pilot tool on the cylinder front cover so that the keyway in the pilot aligns with the key in the crankshaft. Position the cover and pilot over the end of the crankshaft and against the block (Fig. 51). Install the retaining screws.

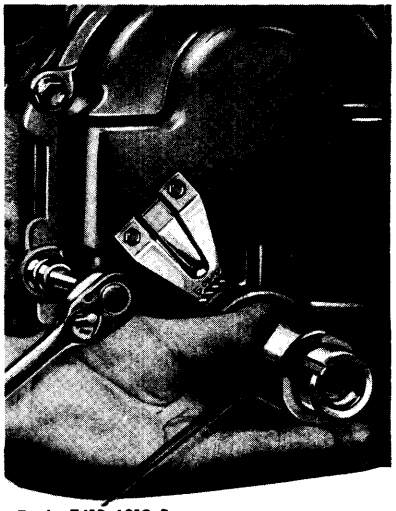

Tool—T61P-6019-B A1287-B

FIG. 51—Cylinder Front Cover Alignment

On a car with an air conditioner, position the compressor bracket in place on the cylinder front cover and install the retaining screws finger-tight.

While pushing in on the pilot, torque the screws to specifications. Remove the pilot.

6. Install the crankshaft sleeve.

7. Line up the damper keyway with the key on the crankshaft. Install the damper on the crankshaft (Fig. 52).

8. Install the damper cap screw and washer, and torque the screw to specifications.

9. Install the power steering pump pulley on the damper. Torque the screws to specifications.

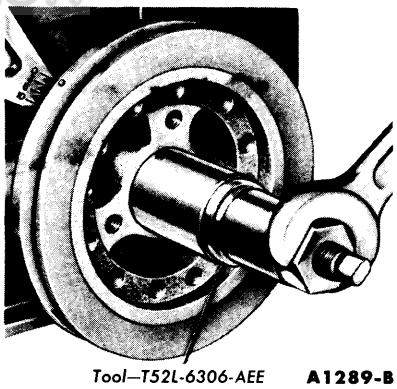

FIG. 52—Crankshaft Damper Installation

10. Clean the oil pan and the oil pump screen. Install the oil pump screen and oil pan.

11. Clean the water pump gasket surfaces. Coat new gaskets with sealer and position the gaskets on the block. Install the water pump, pulley, fan, and generator adjusting arm as an assembly.

12. Install and adjust the generator drive belt(s).

On a car with an air conditioner, install and adjust the drive belt.

13. Install the power steering pump drive belt and attach the pump bracket to the water pump. Adjust the drive belt tension.

14. Install the fuel pump using a new gasket.

15. Connect the carburetor fuel inlet line. Connect the heater hoses. Slide the water pump by-pass tube clamp forward on the tube.

16. Install the radiator and support as an assembly. Connect the radiator lower hose at the water pump and the radiator upper hose at the radiator supply tank. Connect the battery ground cable. Connect the transmission oil cooler lines.

17. Fill and bleed the cooling system. Fill the crankcase with the proper grade and quantity of engine oil. Connect the heater hose to the intake manifold.

18. Operate the engine at fast idle and check for coolant and oil leaks. Adjust the ignition timing. Install the air cleaner.

CLEANING AND INSPECTION

Clean all parts in solvent and dry them with compressed air. Inspect the chain for broken links and the sprockets for cracks, and worn or damaged teeth. Replace all the components of the timing chain and sprocket assembly if any one item needs replacement.

FRONT OIL SEAL REPLACEMENT

It is good practice to replace the oil seal each time the cylinder front cover is removed.

1. Drive out the old seal with a pin punch. Clean out the recess in the cover.

2. Coat a new seal with grease, then install the seal (Fig. 53). Drive the seal in until it is fully seated in the recess. Check the seal after installation to be sure the spring is properly positioned in the seal.

CAMSHAFT

The camshaft and related parts are shown in Fig. 54.

REMOVAL

1. Remove the cylinder front cover and the timing chain and sprockets following steps 1 thru 18 under "Cylinder Front Cover and Timing Chain Removal."

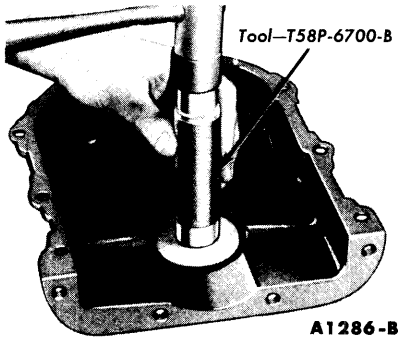

FIG. 53—Oil Seal Installation

2. Disconnect the spark plug wires at the spark plugs and remove the wires from the ignition harness brackets on the valve rocker arm covers. Disconnect the coil high tension lead at the coil. Remove the distributor cap and spark plug wire assembly. Disconnect the distributor vacuum line at the distributor. Remove the distributor hold down bolt and clamp and remove the distributor.

3. Remove the valve rocker arm covers. Refer to "Valve Rocker Arm Shaft Assembly Removal" and remove the valve rocker arm shaft assemblies by following steps 4 and 5.

4. Remove the valve push rods in sequence and place them in a rack so that they can be installed in their original positions.

5. Position an inspection light through a push rod opening and into the valve push rod valley (Fig. 55). Remove the valve lifters with a magnet through the push rod openings. In some cases, it will be necessary to transfer the lifter over to an adjoining push rod opening in order to remove it. Place the lifters in a rack so that they can be installed in their original positions.

6. Remove the oil pan and oil pump screen by following the pro-

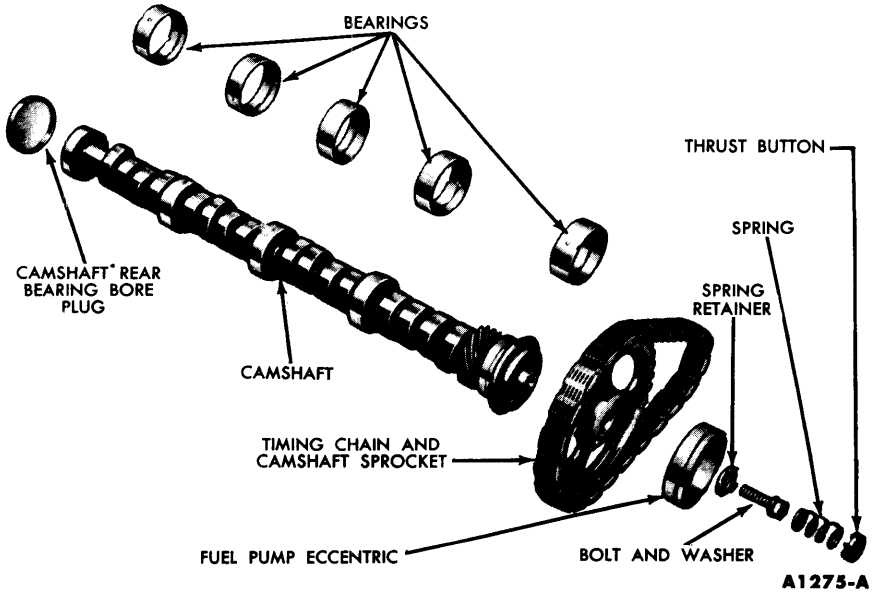

FIG. 54—Camshaft and Related Parts

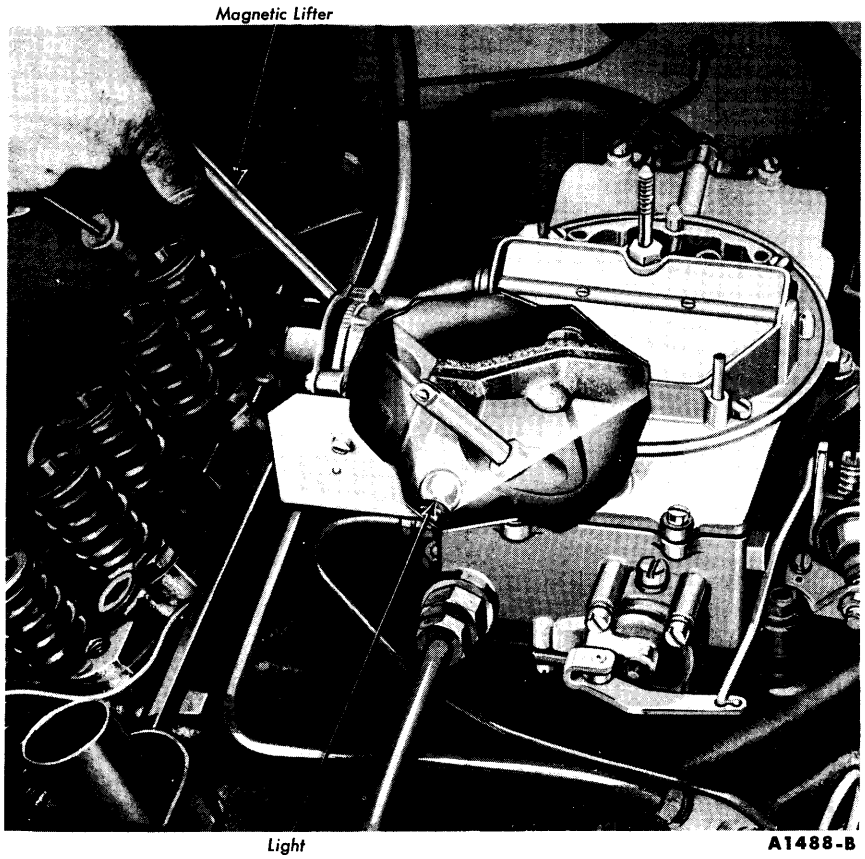

FIG. 55—Valve Lifter Replacement—Intake Manifold Installed

cedure under "Oil Pan Removal."

7. Carefully remove the camshaft by pulling it toward the front of the engine. **Use caution to avoid damaging the camshaft bearings.**

INSTALLATION

1. Oil the camshaft and apply Lubriplate to the lobes. Carefully slide the camshaft through the bearings.

2. Position the sprockets and timing chain on the camshaft and crankshaft (Fig. 49) with the timing marks on the sprockets aligned as shown in Fig. 48.

3. Install the fuel pump eccentric, the camshaft sprocket cap screw, and thrust button spring retainer. Torque the sprocket cap screw to specifications. Install the camshaft thrust button (Fig. 50). Install the front oil slinger.

4. Replace the crankshaft front oil seal. Install the cylinder front cover, the crankshaft damper, and related parts following steps 3 thru 16 under "Cylinder Front Cover and Timing Chain Installation."

5. With No. 1 piston on TDC at the end of the compression stroke, position the distributor in the block with the rotor at the No. 1 firing position and the points open. Install the hold down clamp.

6. Connect the distributor vacuum line. Install the distributor cap. Connect the coil high tension lead.

7. Install the valve lifters in the bores from which they were removed.

8. Refer to "Valve Rocker Arm Shaft Assembly Installation" and install the valve rocker arm shaft assembly following steps 1 thru 9.

9. Fill and bleed the cooling system. Fill the crankcase with the proper grade and quantity of engine oil.

10. Start the engine and check and adjust the ignition timing. Operate the engine at fast idle and check all hose connections and gaskets for leaks.

CLEANING AND INSPECTION

Clean the camshaft in solvent and wipe it dry. Inspect the camshaft lobes for scoring, and signs of abnormal wear. Lobe wear characteristics may result in pitting in the general area of the nose portion of the lobe. This pitting is not detrimental to the operation of the camshaft, therefore, the camshaft should not be replaced until the lobe lift loss has exceeded 0.005 inch.

The lift of camshaft lobes can only be accurately checked with the camshaft installed in the engine. Refer to "Camshaft Lobe Lift."

Check the distributor drive gear for broken or chipped teeth.

Remove light scuffs, scores, or nicks from the camshaft machined surfaces with a smooth oilstone.

CAMSHAFT REAR BEARING BORE PLUG REPLACEMENT

1. Remove the transmission and converter housing by following the procedure in Part 5-4.

2. Remove the flywheel retaining bolts and remove the flywheel.

3. Drill a ½-inch hole in the camshaft rear bearing bore plug and use tool T-7600-E to remove the plug.

4. Clean out the plug bore recess thoroughly.

5. Coat the flange of a new plug with water resistant sealer and install it with the flange facing out (Fig. 83).

6. Install the flywheel.

7. Install the transmission and converter housing by following the procedure in Part 5-4.

HYDRAULIC VALVE LIFTER REPLACEMENT

The following procedure is applicable for removing one or all of the valve lifters. This procedure can not be used if the valve lifters are stuck in their bores by excessive varnish, etc. In this case it will be necessary to remove the intake manifold. After the intake manifold has been removed, remove the valve lifters.

1. Refer to "Valve Rocker Arm Shaft Assembly Removal" and remove the valve rocker arm covers and the valve rocker arm shaft assemblies by following steps 1 thru 5.

2. Position an inspection light through a push rod opening and into the valve push rod valley (Fig. 55). Remove the valve lifters with a magnet through the push rod openings. In some cases, it will be necessary to transfer the lifter over to an adjoining push rod opening in order to re-

move it. Place the lifters in a rack so that they can be installed in their original positions.

The internal parts of each hydraulic valve lifter assembly are matched sets. Do not intermix the parts. Keep the assemblies intact until they are to be cleaned.

3. Install the new (or cleaned) hydraulic valve lifters through the push rod openings with a magnet (Fig. 55).

4. Refer to "Valve Rocker Arm Shaft Assembly Installation" and install the valve rocker arm shaft assemblies and the covers by following steps 1 thru 9.

CLEANING AND INSPECTION

The lifter assemblies should be kept in proper sequence so that they can be installed in their original position. Inspect and test each lifter separately so as not to intermix the internal parts. **If any part of the lifter assembly needs replacing, replace the entire assembly.**

Thoroughly clean all the parts in clean solvent and wipe them with a clean, lint-free cloth.

Inspect the parts and discard the entire lifter assembly if any part shows signs of pitting, scoring, galling, or evidence of non-rotation. Replace the entire assembly if the plunger is not free in the body. The plunger should drop to the bottom of the body by its own weight.

Assemble the lifter assembly and check the assembly for freeness of operation by pressing down on the push rod cup. The lifter can also be checked with a hydraulic valve lifter tester to test the leak-down rate. Follow the instructions of the test unit manufacturer.

DISASSEMBLY

Each valve lifter is a matched assembly. If the parts of one lifter are inter-mixed with those of another, improper valve operation may result. Disassemble and assemble each lifter separately. Keep the lifter assemblies in proper sequence so that they can be installed in their original bores.

1. Grasp the lock ring with needle-nose pliers to release it from the groove. If necessary, depress the plunger to fully release the lock ring.

2. Remove the push rod cup, plunger, and spring.

3. Invert the plunger assembly and remove the disc valve retainer by carefully prying up on it with a screw driver. Remove the disc valve and spring.

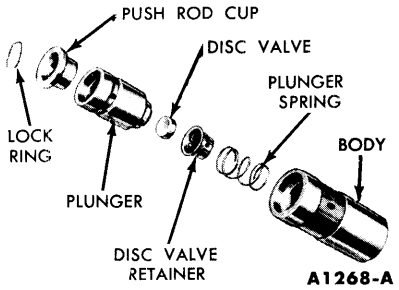

FIG. 56—Typical Hydraulic Valve Lifter Assembly

ASSEMBLY

A typical hydraulic valve lifter is shown in Fig. 56.

1. Place the plunger upside down on a clean work bench.

2. Place the disc valve in position over the oil hole on the bottom of the plunger. Set the disc valve spring on top of the disc.

3. Position the disc valve retainer over the disc and spring and push the retainer down into place on the plunger.

4. Place the plunger spring, and then the plunger (open end up) into the lifter body.

5. Place the push rod seat in the plunger.

6. Depress the plunger, and position the closed end of the lock ring in the groove of the lifter body. With the plunger still depressed, position the open ends of the lock ring in the groove. Release the plunger, then depress it again to fully seat the lock ring.

CRANKSHAFT LOWER REAR OIL SEAL REPLACEMENT

The upper oil seal in the block cannot be replaced with the crankshaft installed. To replace the lower rear oil seal in the rear main bearing cap and the side seals:

1. Remove the oil pan and related parts.

2. Remove the rear main bearing cap. Remove and discard the rear seal and side seals.

3. Clean the rear journal oil seal groove.

4. Install a new rear journal oil seal in the rear main bearing cap (Fig. 57). After installation, cut the ends of the seals flush.

5. Apply a thin coating of oil resistant sealer to the rear main bearing cap at the rear of the top mating surface (Fig. 57). **Do not apply sealer to the area forward of the side seal groove.** Install the rear main bearing cap. Torque the cap bolts to specifications.

6. Dip the side seals in light engine oil, then immediately install them in the grooves. **Do not use sealer on the side seals. The seals are designed to expand when dipped in oil. Using sealer may retard this expansion.** It may be necessary to tap the seals into place for the last ½ inch of travel. Do not cut the seal projecting ends.

7. Check the retainer side seals for leaks by squirting a few drops of oil into the parting lines between the rear main bearing cap and the cylinder block from the outside. Blow compressed air against the seals from the inside of the block. If air bubbles appear in the oil, it indicates possible oil leakage. **This test should not be performed on newly installed seals until sufficient time has been allowed for the seals to expand into the seal grooves.**

8. Install the oil pan and related parts.

9. Fill the crankcase. Start the engine and check for oil pressure. Operate the engine at fast idle and check for oil leaks.

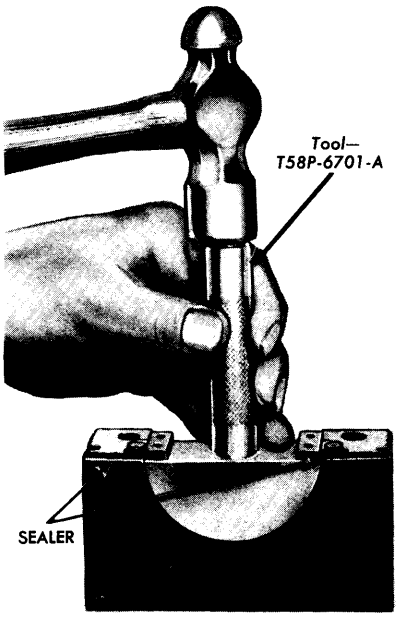

FIG. 57—Seal To Rear Bearing Cap Installation

MAIN AND CONNECTING ROD BEARING REPLACEMENT

The main and connecting rod bearing inserts are selective fit. **Do not file or lap bearing caps or use shims to obtain the proper bearing clearance.**

Selective fit bearings are available for service in standard sizes only. Standard bearings are divided into two sizes and are identified by a daub of red or blue paint. Refer to the Parts Catalog for the available sizes. **Red marked bearings increase the clearance; blue marked bearings decrease the clearance.** Undersized bearings, which are not selective fit, are available for use on journals that have been refinished.

MAIN BEARING REPLACEMENT

1. Drain the crankcase. Remove the oil level dipstick. Remove the oil pan and oil pump. Remove the spark plugs to allow easy rotation of the crankshaft.

2. **Replace one bearing at a time leaving the other bearing securely fastened.** Remove the main bearing cap to which new bearings are to be installed.

3. Insert the upper bearing removal tool (tool 6331) in the oil hole in the crankshaft.

4. Rotate the crankshaft in the direction of engine rotation to force the bearing out of the block.

5. Clean the crankshaft journal and bearing inserts. **When replacing standard bearings with new bearings, it is good practice to first try to obtain the proper clearance with two blue bearing halves.**

6. To install the upper main bearing, place the plain end of the bearing over the shaft on the locking tang side of the block. Using tool 6331 in the oil hole in the crankshaft, rotate the crankshaft in the opposite direction of engine rotation until the bearing seats itself. Remove the tool.

7. Replace the cap bearing.

8. Support the crankshaft so its weight will not compress the Plastigage and provide an erroneous reading. Position a small jack so it will bear against the counterweight adjoining the bearing which is being checked.

9. Place a piece of Plastigage on the bearing surface the full width of the bearing cap and about ¼ inch off center (Fig. 58).

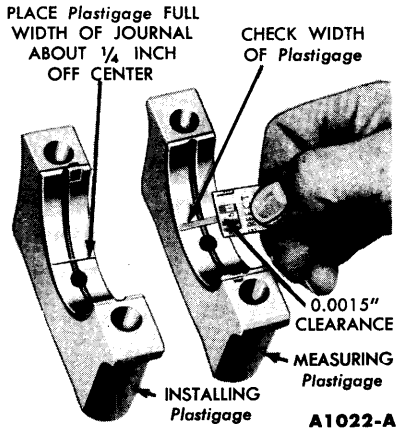

FIG. 58—Installing and Measuring Plastigage—Engine In Chassis

10. Install the cap and torque the bolts to specifications. **Do not turn the crankshaft while the Plastigage is in place. When checking the width of the Plastigage, check at the widest point in order to get the minimum clearance. Check at the narrowest point in order to get the maximum clearance. The difference between the two readings is the taper.**

If the clearance is less than the specified limits, try two red bearing halves or a combination of red and blue depending upon the condition. If the standard bearings do not bring the clearance within the desired limits, refinish the crankshaft journal, then install undersize bearings.

11. After the bearing has been checked and found to be satisfactory, apply a light coat of engine oil to the journal and bearings, then install the bearing cap. Torque the cap bolts to specifications.

12. Repeat the procedure for the remaining bearings that require replacement.

13. If the rear main bearing is replaced, replace the lower oil seal in the rear main bearing cap and the side seals and check the side seals for leaks by following steps 3 thru 7 under "Crankshaft Lower Rear Oil Seal Replacement."

14. Disassemble, clean, and assemble the oil pump.

15. Install the oil pump and oil pan. Install the oil level dipstick. Fill the crankcase with the proper amount and viscosity oil. Install the spark plugs.

16. Operate the engine and check for oil leaks.

CONNECTING ROD BEARING REPLACEMENT

1. Follow step 1 under "Main Bearing Replacement."

2. Turn the crankshaft until the connecting rod to which new bearings are to be fitted is down.

3. Remove the connecting rod cap. Push the connecting rod up into the cylinder and remove the bearing insert from the rod and cap.

4. Follow step 5 under "Main Bearing Replacement."

5. Install the new bearings in the connecting rod and cap. Pull the connecting rod assembly down firmly on the crankshaft journal.

6. Place a piece of Plastigage on the lower bearing surface, the full width of the cap and about ¼ inch off center.

7. Install the cap and torque the connecting rod nuts to specifications. **Do not turn the crankshaft while the Plastigage is in place.**

8. Remove the cap. Using the Plastigage scale, check the width of the Plastigage by following step 11 under "Main Bearing Replacement."

9. After the bearing clearance has been checked and found to be satisfactory, apply a light coat of engine oil to the journal and bearings. Install the connecting rod cap.

10. Repeat the procedure for the remaining connecting rods that require new bearings.

11. Follow steps 14, 15, and 16 under "Main Bearing Replacement."

CLEANING AND INSPECTION

Clean the bearing inserts and caps thoroughly. Inspect each bearing carefully. Bearings that have a scored, chipped, or worn surface should be replaced. Typical examples of bearing failures and their causes are shown in Fig. 59. Check the clearance of bearings that appear to be satisfactory with Plastigage. Fit new bearings following the recommended procedure. The copper lead bearing base may be visible through the bearing overlay. This does not mean that the bearing is worn. Do not replace the bearing if the bearing clearance is within recommended limits.

PISTON AND CONNECTING ROD ASSEMBLY

REMOVAL

1. Drain the cooling system and the crankcase. Remove the intake

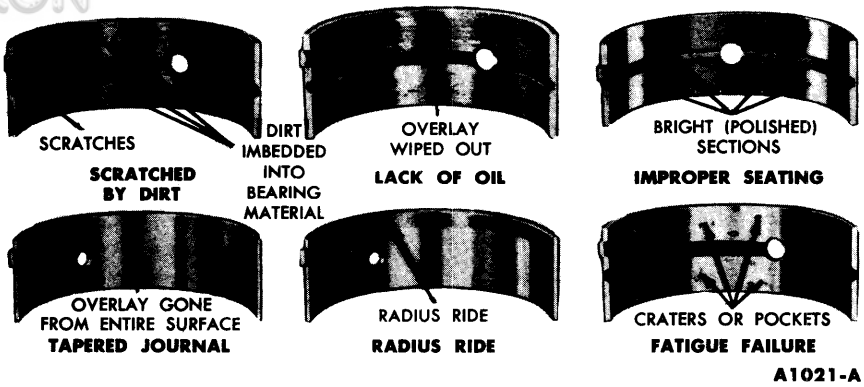

FIG. 59—Typical Bearing Failures

manifold, cylinder heads, oil pan and oil pump following the procedures in this section.

2. Remove any ridge and/or deposits from the upper end of the cylinder bores as follows:

Turn the crankshaft until the piston to be removed is at the bottom of its travel and place a cloth on the piston head to collect the cuttings. Remove any ridge and/or deposits from the upper end of the cylinder bores. Remove the cylinder ridge with a ridge cutter. Follow the instructions furnished by the tool manufacturer. **Never cut into the ring travel area in excess of 1/32 inch when removing ridges.**

3. Make sure all connecting rod caps are marked so that they can be installed in their original locations.

4. Turn the crankshaft until the connecting rod being removed is down.

5. Remove the connecting rod cap.

6. Push the connecting rod and piston assembly out the top of the cylinder with the handle end of a hammer. **Avoid damage to the crankshaft journal or the cylinder wall when removing the piston and rod.**

7. Remove the bearing inserts from the connecting rod and cap.

8. Install the cap on the connecting rod from which it was removed.

INSTALLATION

1. If new piston rings are to be installed, remove the cylinder wall glaze. Follow the instructions of the tool manufacturer.

2. Oil the piston rings, pistons, and cylinder walls with light engine oil. **Be sure to install the pistons in the same cylinders from which they were removed, or to which they were fitted. The connecting rods and bearing caps are numbered from 1 to 4 in the right bank and from 5 to 8 in the left bank beginning at the front of the engine. The numbers on the connecting rod and bearing cap must be on the same side when installed in the cylinder bore. If a connecting rod is ever transposed from one block or cylinder to another, new bearings should be fitted and the connecting rod should be numbered to correspond with the new cylinder number.**

3. Make sure the ring gaps are properly spaced around the circumference of the piston.

4. Install a piston ring compressor on the piston and push the piston in with a hammer handle until it is slightly below the top of the cylinder (Fig. 60). Be sure to guide the connecting rods to avoid damaging the crankshaft journals. **Install the piston with the indentation in the piston head toward the front of the engine.**

5. Check the clearance of each bearing by following the procedure under "Connecting Rod Bearing Replacement."

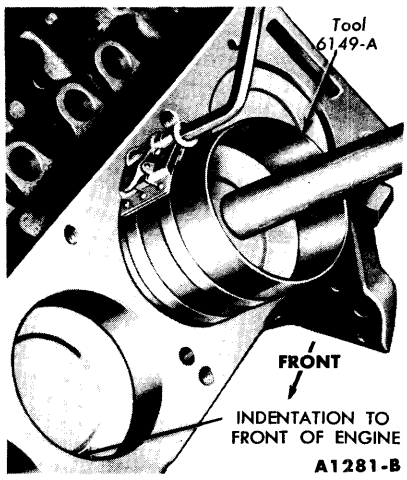

FIG. 60—Piston Installation

6. After the bearings have been fitted, apply a light coat of engine oil to the journals and bearings.

7. Turn the crankshaft throw to the bottom of its stroke. Push the piston all the way down until the connecting rod bearing seats on the crankshaft journal.

8. Install the connecting rod cap. Torque the nuts to specifications.

9. After the piston and connecting rod assemblies have been installed, check the side clearance between the connecting rods on each crankshaft journal (Fig. 61).

10. Disassemble, clean, and assemble the oil pump. Clean the oil pump inlet tube screen, and the oil pan and block gasket surfaces.

11. Install the oil pump and the oil pan.

12. Install the cylinder heads by following steps 1 thru 5 under "Cylinder Head Installation."

13. Refer to "Intake Manifold Installation" and install the intake manifold by following steps 2 through 19.

14. Fill and bleed the cooling system. Fill the crankcase with the proper grade and quantity of engine oil.

15. Operate the engine and check for oil and coolant leaks. Check and

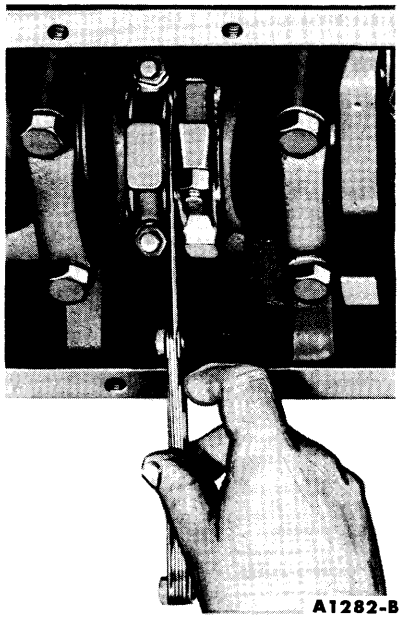

FIG. 61—Connecting Rod Side Clearance

adjust the ignition timing. Adjust the engine idle speed and fuel mixture.

16. Install the air cleaner.

DISASSEMBLY

1. Mark the pistons and pins to assure assembly with the same rod and installation in the same cylinder from which they were removed.

2. Remove the piston rings. Remove the piston pin retainers. Drive the pin out of the piston and connecting rod (Fig. 62). Discard the retainers.

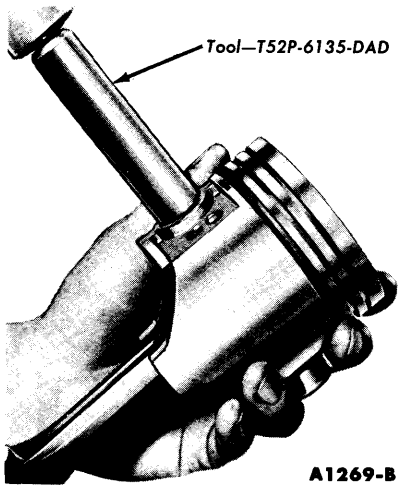

FIG. 62—Piston Pin Removal

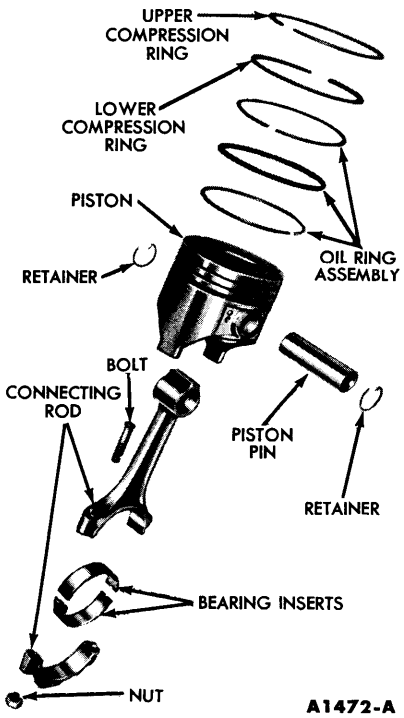

FIG. 63—Piston, Connecting Rod, and Related Parts

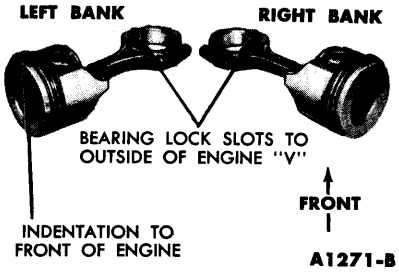

FIG. 64—Connecting Rod and Piston Assembly

ASSEMBLY

The piston, connecting rod, and related parts are shown in Fig. 63.

1. Lubricate all parts with light engine oil. Position the connecting rod in the piston and push the pin into place. Assemble the piston and connecting rod as shown in Fig. 64.

2. Insert new piston pin retainers by spiraling them into the piston with the fingers. Do not use pliers. Follow the instructions contained on the piston ring package and install the piston rings.

3. Check the ring side clearance of the compression rings with a feeler gauge inserted between the ring and its lower land (step 6 under "Fitting Piston Rings").

4. Be sure the bearing inserts and the bearing bore in the connecting rod and cap are clean. Foreign material under the inserts may distort the bearing and cause a failure. Install the bearing inserts in the connecting rod and cap with the tangs fitting in the slots provided.

CONNECTING ROD CLEANING AND INSPECTION

The connecting rods and related parts should be carefully inspected and checked for conformance to specifications. Various forms of engine wear caused by these parts can be readily identified.

A shiny surface on the pin boss side of the piston usually indicates that a connecting rod is bent or the piston pin hole is not in proper relation to the piston skirt and ring grooves. Abnormal connecting rod bearing wear can be caused by either a bent connecting rod, an improperly machined crankshaft journal, or a tapered connecting rod bore.

Twisted connecting rods will not create an easily identifiable wear pattern, but badly twisted rods will disturb the action of the entire piston, rings, and connecting rod assembly and may be the cause of excessive oil consumption.

Clean the connecting rod in solvent, including the rod bore and the back of the inserts. **Do not use a caustic cleaning solution.** Blow out all passages with compressed air.

Inspect the connecting rods for signs of fractures and the bearing bores for out-of-round and taper. If the bore exceeds the recommended limits and/or if the connecting rod is fractured, it should be replaced.

Check the piston pin to connecting rod bushing clearance. Replace the connecting rod if the bushing is so worn that it cannot be reamed or honed for an oversize pin.

Replace defective connecting rod nuts and bolts.

After the connecting rods are assembled to the piston, check the connecting rods for bend or twist on a suitable alignment fixture. Follow the instructions of the fixture manufacturer. If the bend and/or twist is excessive, the connecting rod should be straightened or replaced.

PISTONS, PINS, AND RINGS CLEANING AND INSPECTION

Remove deposits from the piston surfaces. Clean gum or varnish from the piston skirt, piston pins, and rings with solvent. **Do not use a caustic cleaning solution or a wire brush to clean pistons.** Clean the ring grooves with a ring groove cleaner (Fig. 65). Make sure the oil ring slots (or holes) are clean.

Carefully inspect the pistons for fractures at the ring lands, skirts, and pin bosses, and for scuffed, rough, or scored skirts. If the lower inner portion of the ring grooves have high steps, replace the piston. The step will interfere with ring operation and cause excessive ring side clearance.

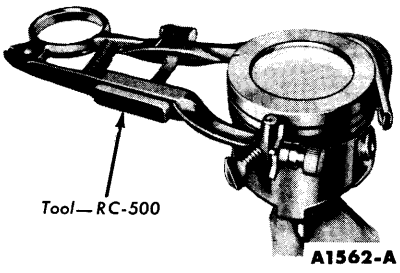

FIG. 65—Cleaning Ring Grooves

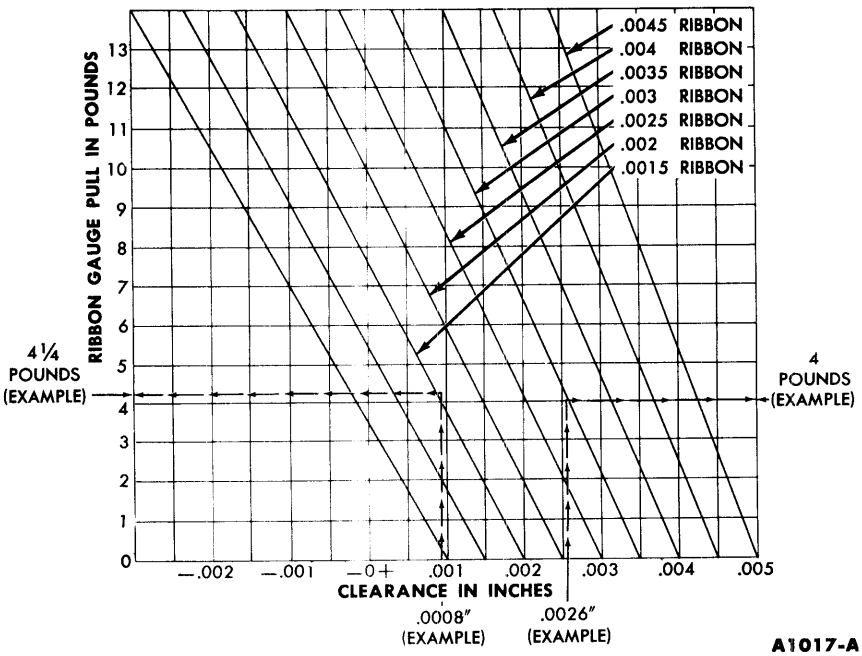

FIG. 66—Piston Clearance Chart

Spongy, eroded areas near the edge of the top of the piston are usually caused by detonation, or pre-ignition. A shiny surface on the thrust surface of the piston, offset from the centerline between the piston pin holes, can be caused by a bent connecting rod. Replace pistons that show signs of excessive wear, wavy ring lands, fractures, and/or damage from detonation or pre-ignition.

Check the piston to cylinder bore clearance with a tension scale and ribbon by following the procedure under "Fitting Pistons." Check the ring side clearance by following the procedure under "Fitting Piston Rings."

Replace piston pins showing signs of fracture or etching and/or wear. Check the piston pin fit in the piston and rod.

Replace all rings that are scored, chipped, or cracked. It is good practice to always install new rings when overhauling the engine. **Rings should not be transferred from one piston to another regardless of mileage.**

FITTING PISTONS

Pistons are available for service in standard sizes and 0.020, 0.030, 0.040, and 0.060-inch oversize.

If the clearance is greater than the maximum specified limit, recheck calculations to be sure that the proper size piston has been selected, check for a damaged piston, then try a new piston.

If the clearance is less than the minimum limit, recheck calculations before trying another piston. If none can be fitted, refinish the cylinder for the next size piston. **When a piston has been fitted, mark it for assembly in the cylinder to which it was fitted.**

If the taper and out-of-round conditions of the cylinder bore are within limits, new piston rings will give satisfactory service provided the piston clearance in the cylinder bore is within limits. If the new rings are to be installed in a used cylinder that has not been refinished, remove the cylinder wall "glaze."

To fit a piston:

1. Calculate the size piston to be used by taking a cylinder bore check (Fig. 86).

2. Select the proper size piston to provide the desired clearance.

3. Make sure the piston and cylinder bore are at room temperature (70°F). **After any refinishing operation, allow the cylinder bore to cool and make sure the piston and bore are clean and dry before the piston fit is checked.**

4. Attach a tension scale to the end of a feeler gauge ribbon that is free of dents or burrs. The feeler ribbon should be ½-inch wide and of one of the thicknesses shown in Fig. 66.

5. Position the ribbon in the cylinder bore so that it extends the entire length of the piston at 90° from the piston pin location. Invert the piston and install it in the bore so that the end of the piston is about 1½ inches below the top of the cylinder block and the piston pin is parallel to the crankshaft axis. Hold the piston and slowly pull the scale in a straight line with the ribbon, noting the pull required to remove the feeler ribbon (Fig. 67).

In Fig. 66 the diagonal lines represent feeler ribbons of various thicknesses, the horizontal lines represent the pounds pull, and the vertical lines represent the clearances. To determine the clearance, locate the line representing the pounds pull required to remove the feeler ribbon from the cylinder bore. Follow the horizontal line to the right until it intersects the diagonal line representing the feeler ribbon. Read down the vertical line for the clearance.

Example 1. If a 0.0015-inch feeler ribbon is used and it takes approximately 4¼-pounds pull to remove the feeler ribbon, the clearance is approximately 0.0008 inch. This is determined by locating the pounds pull (4¼) in Fig. 66 and following the line to the right until it intersects with the diagonal line representing the 0.0015-inch feeler ribbon. Read down the vertical line for the clear-

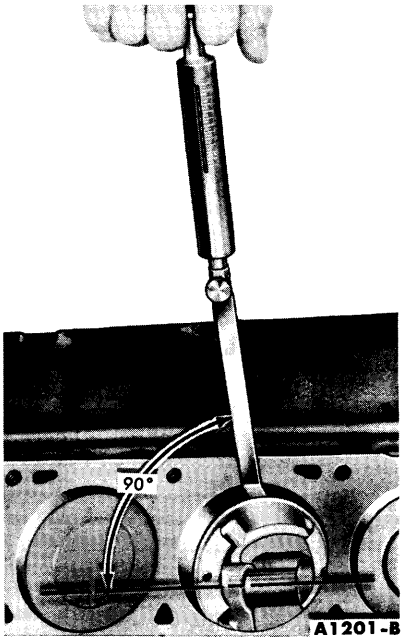

FIG. 67—Checking Piston Fit

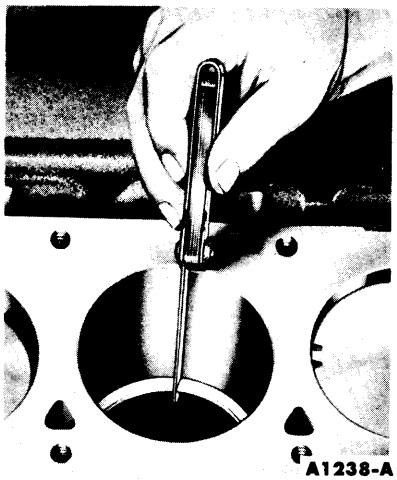

FIG. 68—Piston Ring Gap

ance (approximately 0.0008 inch).

Example 2. If a 0.003-inch feeler ribbon is used and it takes approximately 9-pounds pull to remove the ribbon, the resultant clearance is approximately 0.0015 inch.

FITTING PISTON RINGS

1. Select the proper ring set for the size piston to be used.

2. Position the ring in the cylinder bore in which it is going to be used.

3. Push the ring down into the cylinder bore area where normal ring wear is not encountered.

4. Use the head of a piston to position the ring so that the ring is square with the cylinder wall. **Use caution to avoid damage to the ring or cylinder bore.**

5. Measure the gap between the ends of the ring with a feeler gauge (Fig. 68). If the gap is less than the recommended lower limit, try another ring set.

6. Check the ring side clearance of the compression rings with a feeler gauge inserted between the ring and its lower land (Fig. 69). The gauge should slide freely around the entire ring circumference without binding. Any wear that occurs will form a step at the inner portion of the lower land. **If the lower lands have high steps, the piston should be replaced.**

FIG. 69—Ring Side Clearance

FITTING PISTON PINS

The piston pin fit should be a light thumb press fit at normal temperature (70°F). Standard piston pins are coded green.

Pins of 0.001-inch oversize (color coded blue) and 0.002-inch oversize (color coded yellow) are available.

If the pin hole in the piston must be reamed, use an expansion-type piloted reamer. Place the reamer in a vise and revolve the piston around the reamer. Set the reamer to the size of the pin bore, then expand the reamer slightly and trial ream the pin bore. Take a light cut. Use a pilot sleeve of the nearest size to maintain alignment of the bores.

Check the hole size, using the new piston pin. If the bore is small, expand the reamer slightly and make another cut. Repeat the procedure until the proper fit is obtained. Check the piston pin for fit in the respective rod bushing. If necessary, ream or hone the bushing to fit the pin.

FLYWHEEL

REMOVAL

1. Disconnect the transmission from the engine and slide it to the rear as outlined in Part 5-4.

2. Remove the flywheel retaining bolts and remove the flywheel.

INSTALLATION

1. Install the flywheel on the crankshaft flange and install the retaining bolts. Torque the bolts in sequence across from each other to specifications.

2. Connect the transmission to the engine as outlined in Part 5-4.

OIL FILTER REPLACEMENT

1. Place a drip pan under the filter. Unscrew the filter from the adapter fitting. Clean the filter adapter recess.

2. Coat the gasket on the new filter with oil, and place the filter in position on the adapter (Fig. 70). Hand tighten the filter until the gasket contacts the adapter face, then advance it ½ turn.

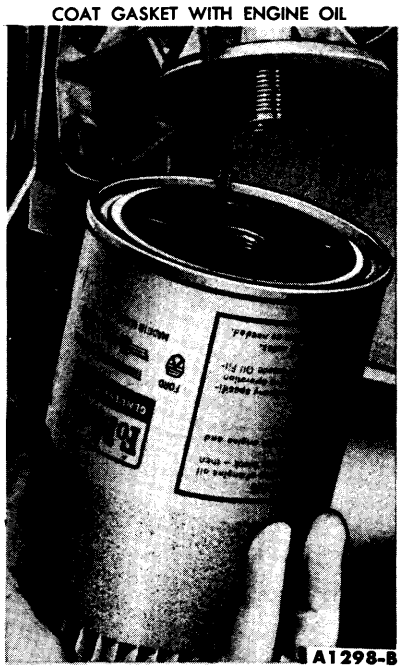

FIG. 70—Oil Filter Replacement

3. Operate the engine at fast idle and check for leaks. If oil leaks are evident, perform the necessary repairs to correct the leakage. Check the oil level and fill the crankcase if necessary.

OIL PAN AND OIL PUMP

REMOVAL

1. Drain the cooling system and the crankcase. Disconnect the radiator upper hose at the radiator supply tank.

2. Remove the oil pan retaining screws and lower the oil pan to the underbody cross member. Position the crankshaft so that the counterweight will clear the oil pan and move the pan forward.

3. Install the engine lifting brackets and sling. Raise the engine high enough to place tension on the engine mounts.

4. Remove the engine front insulator to engine retaining bolts. Raise the engine high enough to permit removal of the oil pump retaining bolts, then remove the bolts. Remove the oil pan and the oil pump.

INSTALLATION

1. Clean the oil pan and block gasket surfaces. Position a new gasket on the oil pan.

2. Clean the oil pump and inlet

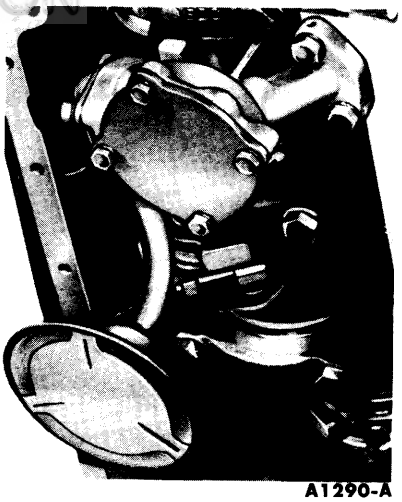

FIG. 71—Oil Pump and Inlet Tube Installed

tube screen. Position a new oil pump inlet tube gasket on the oil pump and install the tube. Prime the oil pump by filling either the inlet or outlet port with engine oil. Rotate the pump shaft to distribute the oil within the pump body.

3. Raise the engine high enough to allow installation of the oil pump and the oil pan. Place the oil pump in the oil pan and position the oil pan on the underbody cross member. Insert the oil pump drive shaft into the oil pump housing and install the oil pump and shaft as an assembly (Fig. 71). **Do not attempt to force the pump into position if it will not seat readily. The drive shaft hex may be misaligned with the distributor shaft. To align, rotate the intermediate shaft into a new position.** Torque the oil pump retaining screws to specifications.

4. Hold the oil pan in place against the cylinder block and install a retaining screw on each side of the oil pan. Install the remaining screws and torque them, from the center outward, to specifications.

5. Lower the engine, then install the engine right and left front support retaining bolts. Torque the bolts to specifications. Remove the engine lifting bracket and sling. Connect the radiator upper hose. Fill and bleed the cooling system. Fill the crankcase with the proper grade and quantity of engine oil. Operate the engine and check for leaks.

OIL PUMP DISASSEMBLY

1. Remove the oil inlet tube from the oil pump and remove the gasket.

2. Remove the cover retaining

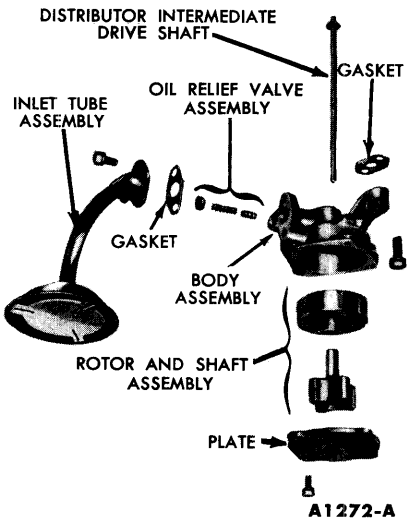

FIG. 72—Oil Pump Assembly

screws, then remove the cover. Remove the inner rotor and shaft assembly, then remove the outer race.

3. Insert a self-threading sheet metal screw of the proper diameter into the oil pressure relief valve chamber cap and pull the cap out of the chamber. Remove the spring and plunger.

OIL PUMP ASSEMBLY

The oil pump assembly is shown in Fig. 72.

1. Oil all parts thoroughly.

2. Install the oil pressure relief valve plunger, spring, and a new cap.

3. Install the outer race, and the inner rotor and shaft assembly. **The inner rotor and shaft, and the outer race are serviced as an assembly. One part should not be replaced without replacing the other.** Install the cover. Torque the cover retaining screws to specifications.

4. Position a new gasket and the oil inlet tube on the oil pump and install the retaining bolts.

OIL PAN
CLEANING AND INSPECTION

Scrape any dirt or metal particles from the inside of the pan. Scrape all old gasket material from the gasket surface. Wash the pan in a solvent and dry it thoroughly. Be sure all foreign matter is removed from below the baffle plate.

Check the pan for cracks, holes, damaged drain plug threads, a loose baffle, and a nicked or warped gasket surface.

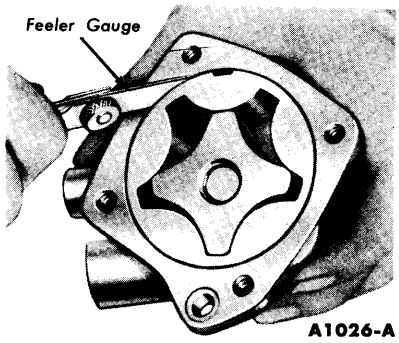

FIG. 73—Outer Race To Housing Clearance

Repair any damage, or replace the pan if repairs can not be made.

OIL PUMP
CLEANING AND INSPECTION

Wash all parts in a solvent and dry them thoroughly. Use a brush to clean the inside of the pump housing and the pressure relief valve chamber. Be sure all dirt and chips are removed.

Check the inside of the pump housing and the outer race and rotor for damage or excessive wear.

Check the mating surface of the pump cover for wear. If the cover mating surface is worn, scored, or grooved, replace the cover.

Measure the outer race to housing clearance (Fig. 73).

With the rotor assembly installed in the housing, place a straight edge over the rotor assembly and the housing. Measure the rotor end play clearance between the straight edge and the rotor and outer race (Fig. 74).

The outer race, shaft and rotor are replaceable only as an assembly,

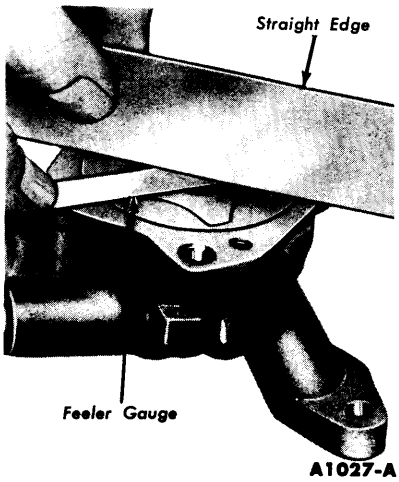

FIG. 74—Rotor End Play

Check the drive shaft to housing bearing clearance by measuring the OD of the shaft and the ID of the housing bearing.

Inspect the relief valve spring for a collapsed or worn condition.

Check the relief valve spring tension. If the spring tension is not within specifications and/or the spring is defective, replace the spring.

Check the relief valve piston for scores and free operation in the bore.

6 WORK STAND REPAIR OPERATIONS

To perform the operations in this section, it will be necessary to remove the engine from the car and install it on a work stand.

CRANKSHAFT

REMOVAL

The crankshaft and related parts are shown in Fig. 75.

1. Remove the generator adjusting arm bracket bolt from the generator and the upper support bracket bolt at the water pump. Remove the spark plugs to allow easy rotation of the crankshaft.

2. Remove the fuel pump. Slide the water pump by-pass hose clamp toward the rear of the engine. Remove the water pump and fan as an assembly.

3. Remove the crankshaft damper, cap screw and washer. Install the puller on the damper (Fig. 45) and remove the damper.

4. If the crankshaft sleeve is not stepped down (the same OD on both ends), remove it as shown in Fig. 46. If the sleeve is stepped down, remove it with a three-jawed puller (tool 7675-N).

5. Remove the cylinder front cover.

6. Remove the oil slinger. Check the timing chain deflection, then remove the timing chain and sprockets by following steps 13 thru 18 under "Cylinder Front Cover Removal."

7. Invert the engine on the work stand. Remove the flywheel. Remove the oil pan and gasket. Remove the oil pump.

8. **Make sure all bearing caps (main and connecting rod) are marked so that they can be installed in their original locations.** Remove the connecting rod bearing caps. Turn the crankshaft until the connecting rod from which the cap is being removed is down and remove the cap. Push the connecting rod and piston assembly up into the cylinder.

9. Remove the main bearing caps.

10. Carefully lift the crankshaft out of the block so that the thrust bearing surfaces are not damaged. **Handle the crankshaft with care to avoid possible fracture or damage to the finished surfaces.**

INSTALLATION

1. Remove the rear journal oil seal from the block and rear main bearing cap. Remove the rear main bearing cap to block side seals.

2. Remove the main bearing inserts from the block and bearing caps.

3. Remove the connecting rod bearing inserts from the connecting rods and caps.

4. If the crankshaft main bearing journals have been refinished to a definite undersize, install the correct undersize bearings. Be sure the bearing inserts and bearing bores are clean. Foreign material under the in-

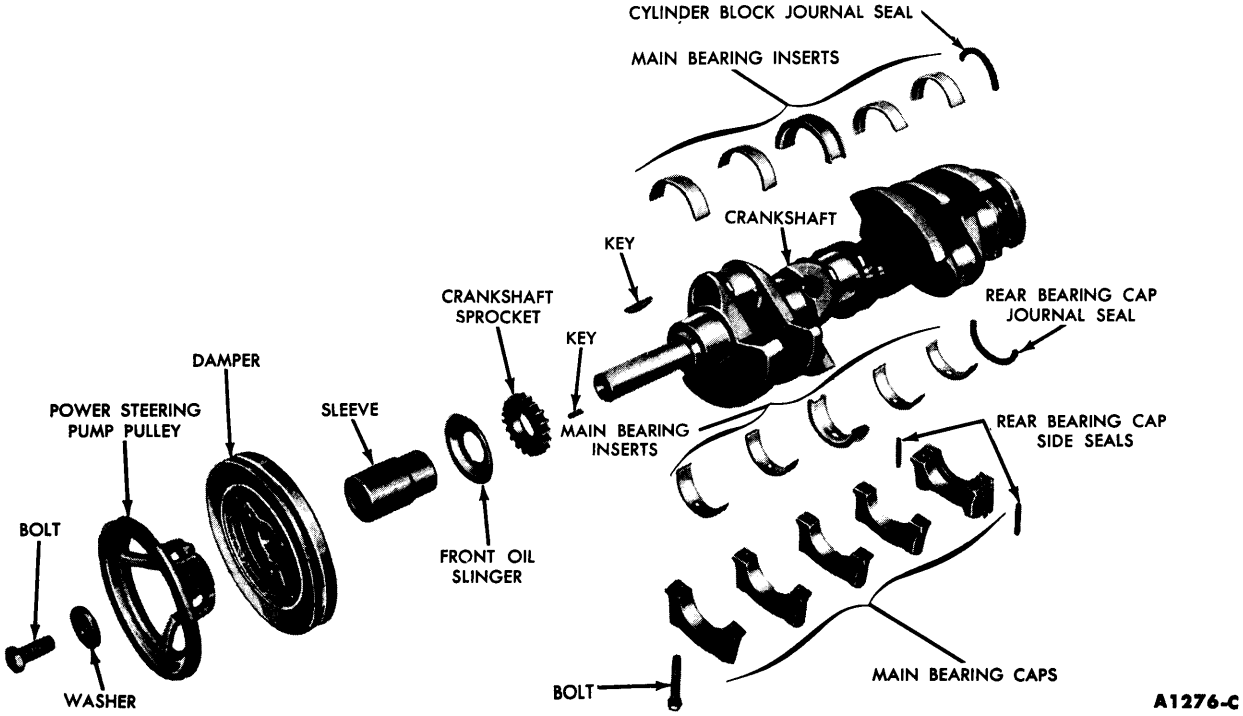

FIG. 75—Crankshaft and Related Parts

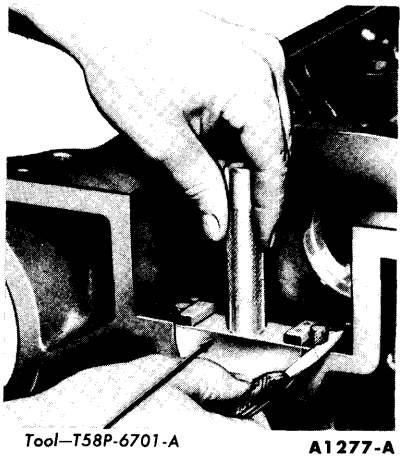

FIG. 76—Seal To Block Installation

serts may distort the bearing and cause a failure.

5. Place the upper main bearing inserts in position in the bores with the tang fitting in the slot provided.

6. Install the lower main bearing inserts in the bearing caps.

7. Install a new rear journal oil seal in the block (Fig. 76). After installation, cut the ends of the seals flush.

8. Carefully lower the crankshaft into place. **Be careful not to damage the bearing surfaces.**

9. Check the clearance of each main bearing as follows:

Place a piece of Plastigage on the crankshaft journal the full width of the journal and about ¼ inch off center (Fig. 77). Follow steps 10 thru 12 under "Main Bearing Replacement."

10. After the bearings have been fitted, apply a light coat of engine

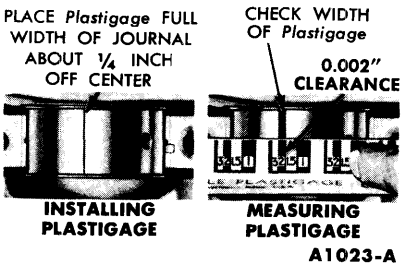

FIG. 77—Installing & Measuring Plastigage—Engine Removed

oil to the journals and bearings. Install a new seal in the rear main bearing cap and install the rear main bearing cap by following steps 3 thru 7 under "Crankshaft Lower Rear Oil Seal Replacement." Install all the bearing caps, except the thrust bearing cap (No. 3 bearing). **Be sure that the main bearing caps are installed in their original locations.** Torque the bearing cap bolts to specifications.

11. Install the thrust bearing cap with the bolts finger-tight.

12. Pry the crankshaft forward against the thrust surface of the upper half of the bearing (Fig. 78).

13. Hold the crankshaft forward and pry the thrust bearing cap to the rear (Fig. 78). This will align the thrust surfaces of both halves of the bearing.

14. Retain the forward pressure on the crankshaft. Tighten the cap bolts to specifications (Fig. 78).

15. Force the crankshaft toward the rear of the engine.

16. Install a dial indicator so that the contact point rests against the crankshaft flange and the indicator axis is parallel to the crankshaft axis

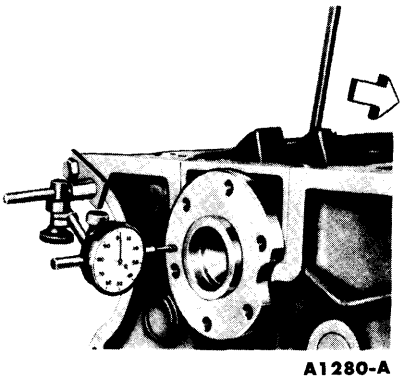

FIG. 79—Crankshaft End Play

(Fig. 79).

17. Zero the dial indicator. Push the crankshaft forward and note the reading on the dial.

If the end play exceeds the wear limit, replace the thrust bearing. If the end play is less than the minimum limit, inspect the thrust bearing faces for scratches, burrs, nicks, or dirt. If the thrust faces are not defective or dirty, they probably were not aligned properly. Install the thrust bearing and align the faces following the recommended procedure (steps 11, 12, 13, and 14), then check the end play.

18. Install new bearing inserts in the connecting rods and caps. Check the clearance of each bearing by following the procedure under "Main Bearing Replacement."

19. After the connecting rod bearings have been fitted, apply a light coat of engine oil to the journals and bearings.

20. Turn the crankshaft throw to the bottom of its stroke. Push the piston all the way down until the rod

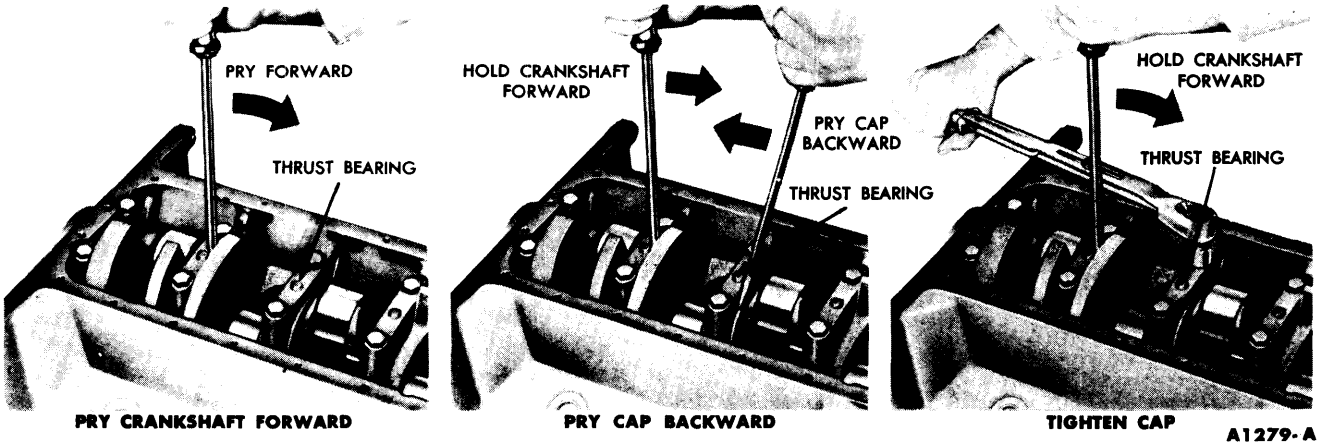

FIG. 78—Thrust Bearing Alignment

bearing seats on the crankshaft journal.

21. Install the connecting rod cap. Torque the nuts to specifications.

22. After the piston and connecting rod assemblies have been installed, check the side clearance between the connecting rods on each connecting rod crankshaft journal (Fig. 61).

23. Clean the oil pan, oil pump, and oil pump screen. Install the oil pump and oil pan.

24. Position the flywheel on the crankshaft. Install the retaining bolts. Torque the bolts to specifications.

25. Install the timing chain and sprockets, cylinder front cover and crankshaft damper, following steps 1 thru 8 under "Cylinder Front Cover Installation."

26. Install the oil filter, fuel pump, and carburetor fuel inlet line. Install the generator. Install the spark plugs.

27. Install the engine in the car.

CLEANING AND INSPECTION

Handle the crankshaft with care to avoid possible fractures or damage to the finished surfaces. Clean the crankshaft with solvent, then blow out all oil passages with compressed air.

Inspect main and connecting rod journals for cracks, scratches, grooves, or scores. Dress minor imperfections with an oilstone. Refinish severely marred journals.

Measure the diameter of each journal in at least four places to determine out-of-round, taper, or undersize condition (Fig. 80).

If the journals exceed the wear limit, they should be refinished to size for the next undersize bearing.

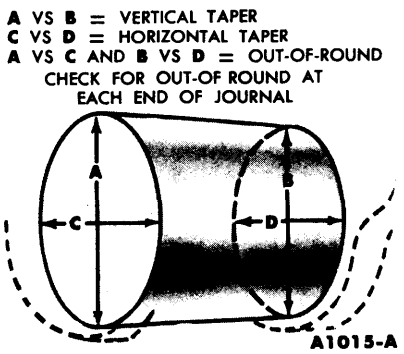

FIG. 80—Crankshaft Journal Measurements

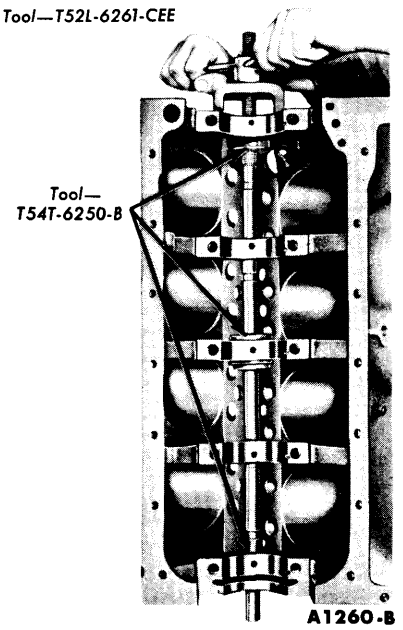

FIG. 81—Camshaft Bearing Replacement

Refinishing Journals. Refinish the journal to give the proper clearance with the next undersize bearing. If the journal will not "clean up" to give the proper clearance with the maximum undersize bearing available, replace the crankshaft.

Always reproduce the same journal shoulder radius that existed originally. Too small a radius will result in fatigue failure of the crankshaft. Too large a radius will result in bearing failure due to radius ride of the bearing.

After refinishing the journals, chamfer the oil holes, then polish the journal with a No. 320 grit polishing cloth and engine oil. Crocus cloth may be used also as a polishing agent.

CAMSHAFT BEARING REPLACEMENT

Camshaft bearings are available prefinished to size for standard and 0.015-inch undersize journal diameters. The bearings are not interchangeable from one bore to another.

1. Remove the camshaft, the flywheel, and the crankshaft. Push the pistons to the top of the cylinders.

2. Remove the camshaft rear bearing bore plug. Remove the camshaft bearings (Fig. 81).

3. Position the new bearings at the bearing bores, and press them in place with the tool shown in Fig. 81.

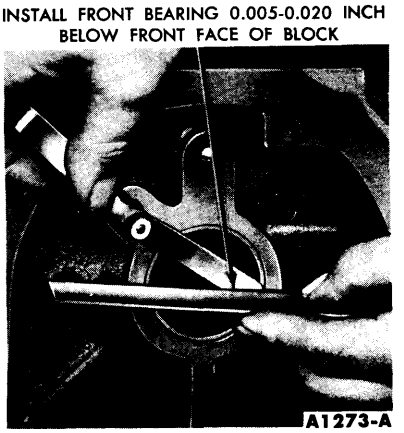

FIG. 82—Camshaft Front Bearing Measurement

Align the oil holes in the bearings with the oil holes in the cylinder block when the bearings are installed. **Be sure the camshaft front bearing is installed 0.005-0.020 inch below the front face of the cylinder block (Fig. 82).**

4. Clean out the camshaft rear bearing bore plug recess thoroughly. Coat the flange of a new plug with water resistant sealer and install the plug (Fig. 83).

5. Install the camshaft, crankshaft, flywheel, and related parts. Install the engine in the car.

ENGINE DISASSEMBLY

1. Install the engine on the work stand (Fig. 17).

2. Remove the distributor cap and spark plug wire assembly.

3. Disconnect the distributor vacuum line at the distributor. Remove the carburetor fuel inlet line. Remove the fuel pump and discard the gasket.

4. Slide the clamp on the water

FIG. 83—Camshaft Rear Bearing Bore Plug Installation

pump by-pass hose toward the water pump. Remove the automatic choke heat tube. Remove the valve rocker arm covers.

5. Crank the engine until the No. 1 piston is at TDC at the end of the compression stroke. Rotate the crankshaft damper an additional 45° (identified on the damper by "XX"). Starting at the No. 4 cylinder, loosen the right rocker arm shaft support bolts in sequence, two turns at a time. After the bolts are all loosened, remove the valve rocker arm shaft assembly and the oil baffle plate. Starting at the No. 5 cylinder, follow the same procedure on the left valve rocker arm shaft support bolts. **This procedure must be followed to avoid damage to the valve mechanism.**

6. Remove the valve push rods in sequence and put them in a rack so that they can be installed in their original bore.

7. Remove the distributor hold down bolt and clamp and remove the distributor.

8. Remove the intake manifold retaining bolts.

9. Install standard eye bolts with 5/16-18 threads in the left front and right rear rocker arm cover screw holes and attach the engine lifting sling (Fig. 16).

10. Raise the manifold and carefully remove it from the engine. Discard the intake manifold gaskets and seals.

11. Remove the baffle plate from the valve push rod chamber floor by prying up on the baffle with a screw driver (Fig. 84).

12. Lift the valve lifters from the cylinder block and place them in a rack so that they can be installed in

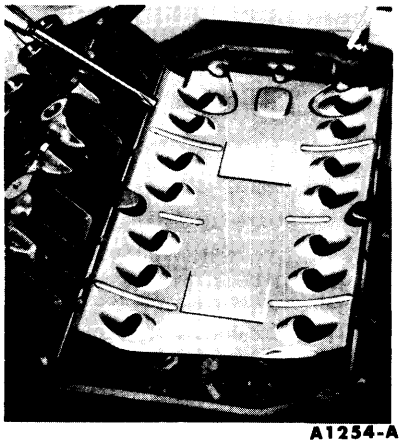

A1254-A

FIG. 84—Baffle Plate Removal

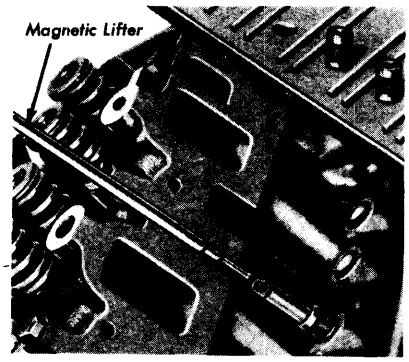

A1255-A

FIG. 85—Hydraulic Valve Lifter Removal

their original bore (Fig. 85). **The internal parts of each hydraulic valve lifter assembly are matched sets. Do not intermix the parts. Keep the assemblies intact until they are to be cleaned.**

13. Remove the exhaust manifolds and the spark plugs.

14. Remove the cylinder head bolts, and then install the cylinder head holding fixtures (Fig. 26).

15. Lift the cylinder heads off the block. **Do not pry between the head and the block.** Discard the cylinder head gaskets.

16. Remove the oil filter. Remove the oil filter adapter assembly and oil pressure sending unit as an assembly. Discard the gasket.

17. Remove the generator, brackets, and drive belts.

18. Remove the water pump, pulley, and fan as an assembly.

19. Remove the power steering pulley. Remove the crankshaft damper (Fig. 45).

20. If the crankshaft sleeve is not stepped down (the same OD on both ends), remove it as shown in Fig. 46. If the crankshaft sleeve is stepped down (different OD on each end), remove it with a three-jawed puller (tool 7675-N).

21. Remove the cylinder front cover. Discard the gasket. Remove the crankshaft front oil slinger.

22. Check the timing chain deflection by following steps 13, 14, and 15 under "Cylinder Front Cover and Timing Chain Removal."

23. Remove the camshaft thrust button and spring, the sprocket cap screw, and thrust button spring retainer, and the fuel pump eccentric. Remove the crankshaft sprocket key. Remove the sprockets and timing chain as an assembly (Fig. 49).

24. Remove any ridge and/or carbon deposits from the upper end of the cylinder bores. Move the piston to the bottom of its travel and place a cloth on the piston head to collect the cuttings. Remove the cylinder ridge with a ridge cutter. Follow the instructions furnished by the tool manufacturer. **Never cut into the ring travel area in excess of 1/32 inch when removing ridges.** After the ridge has been removed, remove the cutter from the cylinder bore.

25. Remove the flywheel.

26. Invert the engine. Remove the oil pan. Discard the gasket.

27. Remove the oil pump and inlet tube as an assembly. Remove the oil pump drive shaft. Discard the oil pump gasket.

28. Make sure all connecting rods and caps are marked so that they can be installed in their original locations. Turn the crankshaft until the connecting rod being removed is down. Remove the rod cap.

29. Push the connecting rod and piston assembly out the top of the cylinder with the handle end of a hammer. **Avoid damage to the crankpin or the cylinder wall when removing the piston and rod.**

30. Remove the bearing inserts from the connecting rods and caps. Install the rod caps on the connecting rods from which they were removed.

31. Remove the main bearing caps.

32. Carefully lift the crankshaft out of the cylinder block so that the thrust bearing surfaces are not damaged. **Handle the crankshaft with care to avoid possible fracture or damage to the finished surfaces.**

33. Remove the rear journal oil seal from the block and rear bearing cap, and remove the cap to block side seals.

34. Remove the main bearing inserts from block and bearing caps. Install the main bearing caps in their original positions.

35. Carefully remove the camshaft by pulling it toward the front of the engine. Use caution to avoid damaging the journals and lobes.

36. Remove the camshaft rear bearing bore plug. Remove the camshaft bearings (Fig. 81).

CYLINDER BLOCK

CLEANING AND INSPECTION

Thoroughly clean the block in solvent. Remove old gasket material from all machined surfaces. Remove all pipe plugs which seal oil passages, then clean out all the passages. Blow out all passages, bolt holes, etc. with compressed air. Make sure the threads in the cylinder head bolt holes are clean. Dirt in the threads may cause binding and result in a false torque reading. Use a tap to true-up threads and to remove any deposits.

After the block has been thoroughly cleaned, make a check for cracks. Minute cracks not visible to the naked eye may be detected by coating the suspected area with a mixture of 25% kerosene and 75% light motor oil. Wipe the part dry and immediately apply a coating of zinc oxide dissolved in wood alcohol. If cracks are present, the coating will become discolored at the defective area. Replace the block if it is cracked.

Check all machined gasket surfaces for burrs, nicks, scratches, and scores. Remove minor imperfections with an oil stone. Check the flatness of the cylinder block gasket surface following the procedure and specifications recommended for the cylinder head.

Replace all expansion-type plugs that show evidence of leakage.

Inspect the cylinder walls for scoring, roughness, or other signs of wear. Check the cylinder bore for out-of-round and taper. Measure the bore with an accurate gauge following the instructions of the manufacturer. Measure the diameter of each cylinder bore at the top, middle, and bottom with the gauge placed at right angles and parallel to the centerline of the engine (Fig. 86).

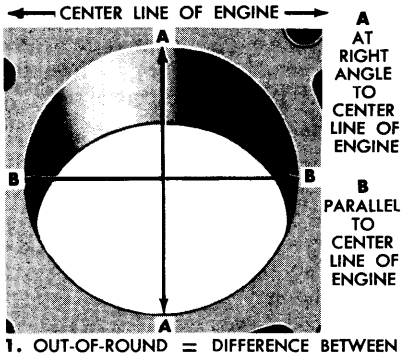

1. OUT-OF-ROUND = DIFFERENCE BETWEEN A AND B
2. TAPER = DIFFERENCE BETWEEN THE A MEASUREMENT AT TOP OF CYLINDER BORE AND THE A MEASUREMENT AT BOTTOM OF CYLINDER BORE A1025-A

FIG. 86—Cylinder Bore Out-of-Round and Taper

Refinish cylinders that are deeply scored and/or when out-of-round and/or taper exceed the wear limits.

If the cylinder walls have minor surface imperfections, but the out-of-round and taper are within limits, it may be possible to remove the imperfections by honing the cylinder walls and installing new service piston rings providing the piston clearance is within limits. Use the finest grade of honing stone for this operation.

REFINISHING CYLINDER WALLS

Honing is recommended for refinishing cylinder walls only when the walls have minor imperfections, such as light scuffs, scratches, etc. The grade of hone to be used is determined by the amount of metal to be removed. Follow the instructions of the hone manufacturer. If coarse stones are used to start the honing operation, leave enough material so that all hone marks can be removed with the finishing hone which is used to obtain the proper piston clearance.

Cylinder walls that are severely marred and/or worn beyond the specified limits should be refinished. Before any cylinder is refinished, all main bearing caps must be in place and tightened to the proper torque so that the crankshaft bearing bores will not become distorted from the refinishing operation.

Refinish only the cylinder or cylinders that require it. **All pistons are the same weight, both standard and oversize; therefore, various sized pistons can be intermixed without upsetting engine balance.**

Refinish the cylinder with the most wear first to determine the maximum oversize. If the cylinder will not clean up when refinished for the maximum oversize piston recommended, replace the block.

Refinish the cylinder to within approximately 0.0015 inch of the required oversize diameter. This will allow enough stock for the final step of honing so that the correct surface finish and pattern are obtained. Use clear sharp hones of No. 220-280 grit for this operation.

For the proper use of the refinishing equipment, follow the instructions of the manufacturer. Only experienced personnel should be allowed to perform this work.

After the final operation in either of the two refinishing methods described and prior to checking the piston fit, thoroughly wash the cylinder walls with solvent to remove all abrasive particles, then thoroughly dry the walls. Check the piston fit. Mark the pistons to correspond to the cylinders in which they are to be installed. When the refinishing of all cylinders that require it has been completed and all pistons fitted, thoroughly clean the entire block to remove all particles from the bearing bores, oil passages, cylinder head bolt holes, etc. Coat the cylinder walls with oil.

ENGINE ASSEMBLY

1. Remove the glaze from the cylinder bores by following the instructions of the tool manufacturer.

2. Invert the engine on the work stand.

3. Position the new bearings at the bearing bores, and press them in place with the tool shown in Fig. 81. Align the oil holes in the cylinder block when the bearings are installed. **Be sure the camshaft front bearing is installed 0.005-0.020 inch below the front face of the cylinder block (Fig. 82).**

4. Check the oil passage that feeds the rocker arm shafts for obstructions by squirting oil into the opening on each cylinder bank and observing the flow through the oil holes at Nos. 2 and 4 bearings.

5. Clean out the camshaft rear bearing bore plug recess thoroughly.

6. Coat the flange of a new plug with water resistant sealer and install it with the flange facing out (Fig. 83). Drive the plug in until it is flush or slightly below the casting surface.

7. Oil the camshaft and apply Lubriplate to all lobes, then carefully slide it through the bearings.

8. Be sure that the rear oil seal grooves are clean. Install a new rear journal oil seal in the block (Fig. 76). After installation, cut the ends of the seals flush.

9. If the crankshaft main bearing journals have been refinished to a definite undersize, install the correct undersize bearings. Be sure the bearing inserts and bearing bores are

clean. Foreign material under the inserts may distort the bearing and cause a failure.

Place the upper main bearing inserts in position in the bore with the tang fitting in the slot provided.

10. Install the lower main bearing inserts in the bearing caps.

11. Carefully lower the crankshaft into place. **Be careful not to damage the bearing surfaces.**

12. Check the clearance of each main bearing by following the procedure under "Main Bearing Replacement."

13. After the bearings have been fitted, apply a light coat of engine oil to the journals and bearings.

14. Be sure that the oil seal grooves in the rear main bearing cap are clean. Install a new journal seal in the cap (Fig. 57). After installation, cut the ends of the seal flush. Apply a thin coating of oil resistant sealer to the rear main bearing cap at the rear of the top mating surface (Fig. 57). **Do not apply sealer to the area forward of the side seal groove.** Install the rear main bearing cap and the remainder of the caps, except the thrust bearing cap (No. 3 bearing). **Be sure that the main bearing caps are installed in their original locations.** Torque the bearing cap bolts to specifications.

15. Install the thrust bearing cap and check crankshaft end play by following steps 11 thru 17 under "Crankshaft Installation."

16. Turn the engine on the work stand so that the front end is up.

17. Install the pistons and connecting rods by following steps 1 thru 9 under "Piston and Connecting Rod Installation."

18. Position the sprockets and timing chain on the camshaft and crankshaft (Fig. 49). Be sure the timing marks on the sprockets are positioned as shown in Fig. 48.

19. Lubricate the timing chain and sprockets with engine oil.

20. Install the fuel pump eccentric (Fig. 50), the camshaft sprocket cap screw, and thrust button spring retainer. Torque the sprocket cap screw to specifications. Install the camshaft thrust button spring and thrust button (Fig. 50). Install the crankshaft front oil slinger.

21. Clean the cylinder front cover and the cylinder block gasket surfaces. Install a new crankshaft front oil seal (Fig. 53).

22. Coat the gasket surface of the block and cover and the cover bolt threads with sealer. Position a new gasket on the block.

23. Install the alignment pilot tool on the cylinder front cover so that the keyway in the pilot aligns with the key in the crankshaft. Position the cover and pilot over the end of the crankshaft and against the block (Fig. 51).

24. Install the cylinder front cover bolts finger-tight. Position the generator support bracket and the generator adjusting arm bracket, then install the bolts (on a car equipped with an air conditioner, connect the compressor and brackets to the cylinder front cover). While pushing in on the pilot, torque the cover bolts to specifications. Remove the pilot.

25. Lubricate the crankshaft with a white lead and oil mixture and lubricate the oil seal rubbing surface with grease.

26. Install the crankshaft sleeve with the smallest OD end into the cylinder front cover bore if the sleeve is stepped down (different OD on each end).

27. Line up the damper keyway with the key on the crankshaft, then install the damper on the crankshaft (Fig. 52). Install the damper cap screw and washer, and torque the screw to specifications.

28. Install the power steering pump pulley on the crankshaft damper.

29. Clean the water pump gasket surfaces and apply sealer. Position new gaskets on the pump and install the water pump, pulley, and fan as an assembly.

30. Using a new gasket, install the fuel pump. Install the generator, brackets, and drive belts.

31. Turn the engine on the work stand so that the top of the engine is up.

32. Clean the cylinder head and block gasket surfaces. Apply sealer to both sides of a new gasket. Guided by the word "FRONT" on the gasket, install the head gasket over the cylinder head dowels.

33. Place the cylinder head on the engine, then remove the holding fixtures. Coat the head bolt threads with water resistant sealer, and then install the bolts.

34. The cylinder head bolt tightening procedure is performed in three progressive steps. Torque the bolts in sequence (Fig. 27) to 70 ft-lbs, then to 80 ft-lbs, and finally to 90 ft-lbs. **After the cylinder head bolts have been torqued to specifications, the bolts should not be disturbed.**

35. Coat the mating surfaces of the exhaust manifold with a light film of graphite grease.

36. Using a new gasket, install the automatic choke air chamber cover on the right exhaust manifold. **Be sure the cover is securely fastened.**

37. Position a new gasket over the muffler inlet pipe studs of the exhaust manifolds.

38. Position the exhaust manifolds on the cylinder heads and install the retaining bolts and tab washers. Torque the retaining bolts to specifications, working from the center to the ends. Lock the bolts by bending one tab of the washer over a flat on the bolt.

39. Install the spark plugs.

40. Position the baffle plate in the valve push rod chamber. Press it into place (Fig. 87).

41. Coat the outside of each valve lifter with engine oil to provide initial lubrication. **Do not fill the lifters with oil. The lifters will fill much faster after the engine is started, if**

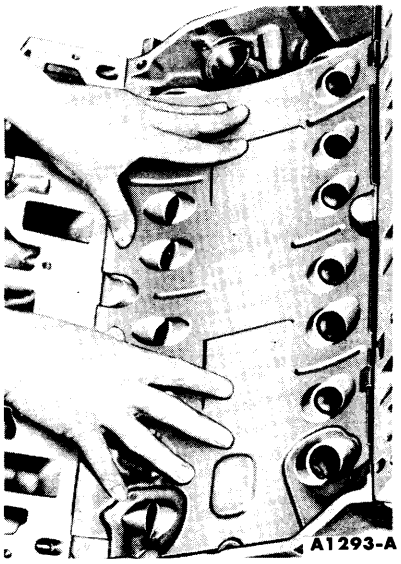

FIG. 87—Baffle Plate Installation

they are free of any oil film which may cause an oil seal between the plunger and the lifter body. Place each lifter in the bore from which it was removed.

42. Clean the mating surfaces of the intake manifold, cylinder heads, and cylinder block.

43. Coat the intake manifold and cylinder block seal surfaces with oil resistant sealer.

44. Position new seals on the cylinder block and new gaskets on the cylinder heads. Position the gasket slots in the end tabs over the ribs on the seals. Be sure the holes in the gaskets are aligned with the holes in the cylinder heads. The correct installation of the gaskets and seals are shown in Fig. 23.

45. Install the eye bolts in the intake manifold and attach the engine lifting sling and carefully lower the intake manifold on the engine (Fig. 21).

46. Position the intake manifold by inserting the distributor in place. **After the intake manifold is in place, run a finger around the seal area to make sure the seals are in place. If the seals are not in place, remove the intake manifold and position the seals.**

47. Start the water pump by-pass hose on the intake manifold.

48. Be sure the holes in the manifold gaskets and manifold are in alignment. Install the manifold retaining bolts and torque them to specifications, working from the center to the ends.

49. Remove the distributor and the engine lifting sling and eye bolts.

50. Refer to "Valve Rocker Arm Shaft Assembly Installation" and install the valve rocker arm shaft assembly by following steps 1 thru 6.

51. Install the automatic choke heat tube.

52. Rotate the crankshaft damper until the No. 1 piston is on TDC then position the distributor in the block with the rotor at the No. 1 firing position and the points open. Install the hold down clamp.

53. Connect the distributor vacuum line. Install the distributor cap. Install the valve rocker arm covers.

54. Connect the spark plug wires. Install the carburetor fuel inlet line.

55. Invert the engine on the work stand. Position the oil pump drive shaft into the distributor socket. With the shaft firmly seated in the distributor socket, the stop on the shaft should touch the roof of the crankcase. Remove the shaft and position the stop as necessary.

56. With the stop properly positioned, insert the oil pump drive shaft into the oil pump.

57. Prime the oil pump by filling either the inlet or outlet port with engine oil. Rotate the pump shaft to distribute the oil within the pump body.

58. Position a new gasket on the pump housing and install the pump and shaft as an assembly. **Do not attempt to force the pump into position if it will not seat readily. The drive shaft hex may be misaligned with the distributor shaft. To align, rotate the intermediate shaft into a new position.**

59. Position a new gasket on the oil pan and place the oil pan assembly on the block. Install the retaining screws and torque them from the center outward to specifications.

60. Position the flywheel on the crankshaft and install the retaining bolts. Torque the bolts to specifications.

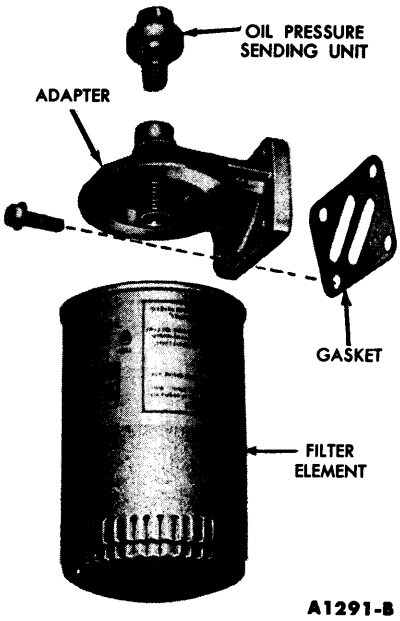

FIG. 88—Oil Filter Assembly

61. The oil filter assembly is shown in Fig. 88. Clean the oil filter adapter gasket surfaces.

62. Apply sealer to a new adapter gasket, and install the adapter assembly and gasket.

63. Clean the adapter filter recess. Coat the gasket on a new filter with oil. Place the filter in position on the adapter. Hand tighten the filter until the gasket contacts the adapter face, and then advance it ½-turn.

64. Install the engine in the car. Operate the engine and check for oil and coolant leaks. Check the ignition timing, adjust the engine idle speed, idle fuel mixture, and anti-stall dashpot.

65. Adjust the transmission control linkage.

7 CRANKCASE VENTILATION SYSTEM MAINTENANCE

Refer to Group 12 for the correct mileage interval for maintenance.

BREATHER CAP

The breather cap located on the oil filter tube should be cleaned with a solvent at the proper mileage interval.

POSITIVE CRANKCASE VENTILATION SYSTEM

At the recommended interval, remove the crankcase ventilation regulator valve, exhaust tube, and connections, and outlet adapter. Clean the valve exhaust tube, fittings, and outlet adapter in clean carburetor solvent and dry them with compressed air. Clean the rubber hose connection with a low volatility petroleum base solvent and dry them with compressed air.

VENT TUBE-TYPE CRANKCASE VENTILATION SYSTEM

The road draft tube seldom requires cleaning except during a high mileage engine overhaul. However, if there is evidence of crankcase pressure, the tube should be checked for excessive sludge and cleaned out if necessary. In addition, the maze screen in the intake manifold baffle plate should be cleaned in solvent to remove any accumulation of sludge deposits.

PART 1-41

EXHAUST SYSTEM

Section		Page
1	Description	1-41
2	Inlet Pipe, Muffler, and Outlet Pipe Replacement	1-42

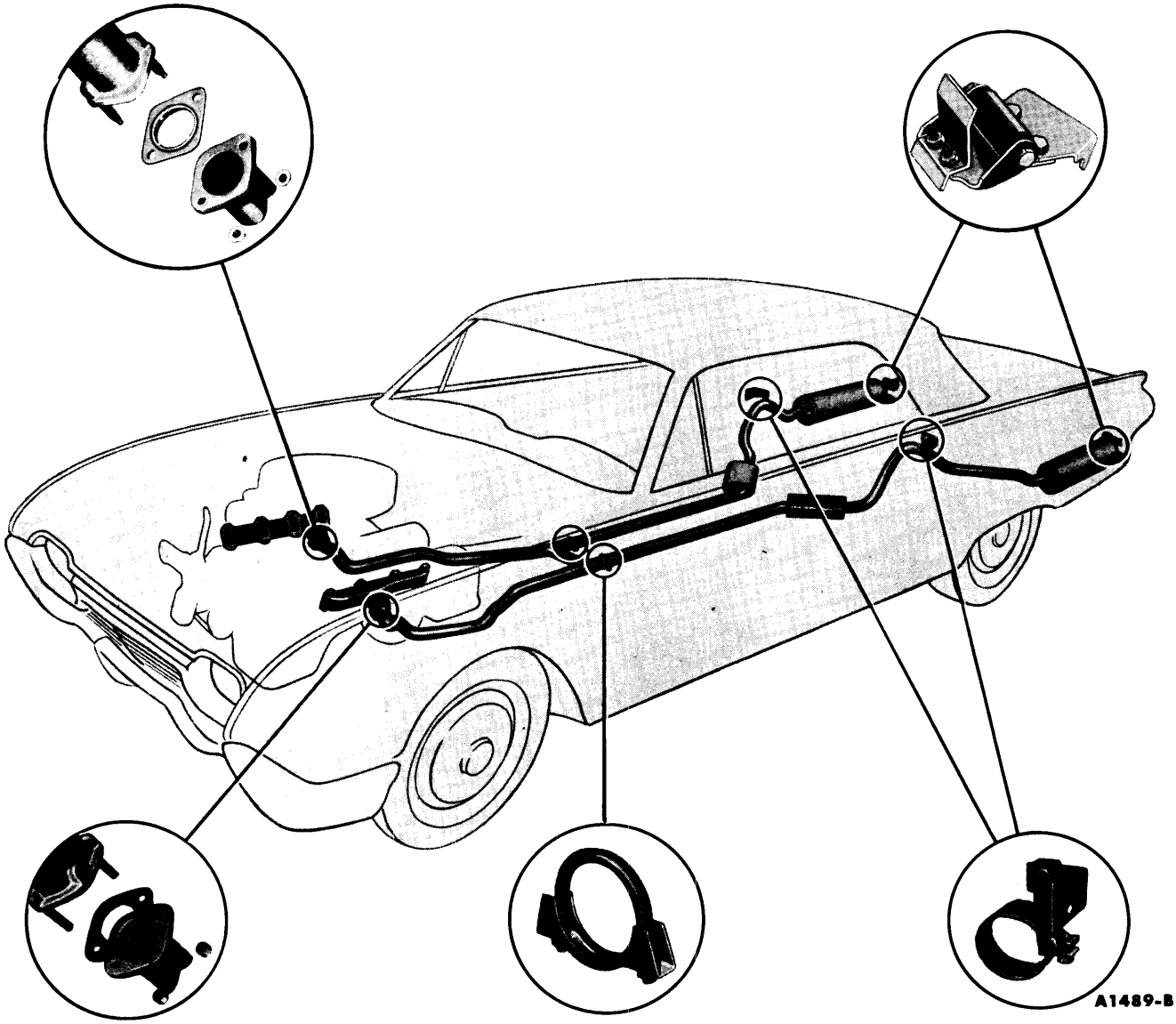

FIG. 1—Exhaust System

1 DESCRIPTION

A dual exhaust system (Fig. 1) is used on all Thunderbirds. The system consists of a separate muffler, muffler inlet pipe rear section, and muffler outlet pipe for each exhaust manifold. The right and left muffler inlet pipe front sections are a one-piece assembly and are serviced as such.

2 INLET PIPE, MUFFLER, AND OUTLET PIPE REPLACEMENT

MUFFLER INLET PIPE

The right and left muffler inlet pipe front sections are serviced as one piece.

1. Loosen the muffler inlet pipe front bracket clamp bolt and slide the clamp from the bracket. Disconnect the inlet pipes at the exhaust manifolds.

2. Remove the retaining clamp from the rear section of the inlet pipe. Disconnect the rear bracket from the rear section of the inlet pipe.

3. Remove the rear section of the inlet pipe.

4. Remove the inlet pipe front section.

5. Position the clamp on the rear section of the new inlet pipe. Connect the front and rear sections. Place a new gasket on the exhaust manifolds.

6. Position the inlet pipe assembly on the exhaust manifold studs and on the extension of the mufflers.

7. Connect the inlet pipe to the exhaust manifolds and torque the nuts to specifications.

8. Align the inlet pipe assembly and connect the brackets.

MUFFLER AND OUTLET PIPE

The procedure applies to either a right or left assembly.

1. Loosen the muffler inlet pipe rear clamp, then spread the clamp and slide it off the muffler.

2. Remove the lower half of the muffler rear clamp. Remove the muffler from the inlet pipe.

3. Position the new muffler and outlet pipe assembly on the inlet pipe. Slide the muffler forward into the inlet pipe until the slots in the muffler extension are blocked. The overlap must not be greater than 1¾ inches.

4. Align the muffler and outlet pipe assembly. Position the muffler inlet pipe clamp and install the retaining bolts. Install the muffler rear clamp.

PART 1-3 SPECIFICATIONS

NOTE: All Specifications are given in inches unless otherwise noted.

GENERAL

ENGINE MODELS AND PISTON DISPLACEMENT—Cubic Inches
Thunderbird Special V-8 390

COMPRESSION RATIO
390 ..... 9.6:1

BRAKE HORSEPOWER @ Specified RPM
390 ..... 300 @ 4600

TORQUE—FOOT-POUNDS @ Specified RPM
390 ..... 427 @ 2800

BORE AND STROKE—Inches
390 ..... 4.05 x 3.78

COMPRESSION PRESSURE—Sea Level @ CRANKING SPEED
390 ..... 180 ± 20

TAXABLE HORSEPOWER
390 ..... 52.49

FIRING ORDER
390 1-5-4-2-6-3-7-8

VALVE ARRANGEMENT—Front to Rear
390 ..... E-I-E-I-I-E-I-E

ENGINE IDLE RPM*
Cruise-O-Matic (Drive Range)
390 475-500
*If equipped with air conditioner, it should be run for at least 20 minutes before setting idle speed.

ENGINE IDLE MANIFOLD VACUUM—Minimum Inches of Mercury @ Specified Engine Neutral Idle rpm—SEA LEVEL
390 18

INITIAL IGNITION TIMING—B.T.D.C.
390—Cruise-O-Matic ..... 8°

CRANKCASE OIL CAPACITY*
390 ..... 5 quarts
*Add one quart extra when changing oil filter.

OIL PRESSURE—Psi hot @ 2000 rpm
390 35-55

CYLINDER HEAD

GASKET SURFACE FLATNESS
0.003 inch in any 6 inches or 0.006 inch overall

VALVE GUIDE BORE STANDARD DIAMETER
Intake and Exhaust
390 ..... 0.3728-0.3735

VALVE SEAT WIDTH
Intake and Exhaust
390 ..... 0.070-0.090

VALVE SEAT ANGLE
Intake and Exhaust
390 ..... 45°

VALVE SEAT RUNOUT
390 ..... 0.002—Wear Limit 0.0025

COMBUSTION CHAMBER VOLUME—CC
390 ..... 73.1-76.1

VALVE MECHANISM

VALVE CLEARANCE*
390 ..... 0.078-0.218
*Hydraulic valve lifters—Clearance specified is obtained at the valve stem tip with the lifter collapsed.

VALVE STEM DIAMETER
Standard
Intake
390 ..... 0.3711-0.3718
Exhaust
390 ..... 0.3693-0.3700
0.003 Oversize
Intake
390 ..... 0.3741-0.3748
Exhaust
390 ..... 0.3723-0.3730
0.015 Oversize
Intake
390 ..... 0.3861-0.3868
Exhaust
390 ..... 0.3843-0.3850

VALVE MECHANISM (Continued)

0.030 Oversize	
Intake	
390	0.4011-0.4018
Exhaust	
390	0.3993-0.4000
VALVE STEM TO VALVE GUIDE CLEARANCE	
Intake	
390	0.0010-0.0024—Wear Limit 0.0045
Exhaust	
390	0.0028-0.0042—Wear Limit 0.0055
VALVE HEAD DIAMETER	
Intake	
390	2.022-2.037
Exhaust	
390	1.551-1.566
VALVE FACE ANGLE	
390	44°
INTAKE AND EXHAUST VALVE FACE RUNOUT	
390	0.002—Wear Limit 0.0025
VALVE SPRING APPROXIMATE FREE LENGTH	
390	2.15
VALVE SPRING MAXIMUM OUT-OF-SQUARE	
390	1/16
VALVE SPRING PRESSURE (LBS.) @ SPECIFIED LENGTH	
390	74-84 @ 1.820
	Wear Limit 67 @ 1.820
	190-208 @ 1.420
	Wear Limit 171 @ 1.420
VALVE SPRING ASSEMBLED HEIGHT	
390	1 13/16-1 27/32
VALVE PUSH ROD RUNOUT	
390	0.025
VALVE TAPPET STANDARD DIAMETER	
390	0.8740-0.8745
VALVE TAPPET TO TAPPET BORE CLEARANCE	
390	0.0005-0.0020
HYDRAULIC VALVE LIFTER LEAK DOWN RATE	
390	10-80 Seconds
ROCKER ARM TO ROCKER SHAFT CLEARANCE	
390	0.003-0.005—Wear Limit 0.006
ROCKER ARM SHAFT OUTSIDE DIAMETER	
390	0.839-0.840
ROCKER SHAFT BORE DIAMETER	
390	0.843-0.844

CAMSHAFT AND TIMING CHAIN

CAMSHAFT JOURNAL STANDARD DIAMETER	
390	2.1238-2.1248
CAMSHAFT JOURNAL RUNOUT	
390	0.005
CAMSHAFT JOURNAL TO BEARING CLEARANCE	
390	0.001-0.003—Wear Limit 0.006
TIMING CHAIN DEFLECTION—INCHES	
390	0.5
INTAKE AND EXHAUST CAMSHAFT LOBE LIFT	
390	0.2316—Wear Limit 0.2266
MAXIMUM ALLOWABLE LOBE LIFT LOSS	
390—Intake and Exhaust	0.005

CAMSHAFT BEARINGS

INSIDE DIAMETER	
390	2.1258-2.1268
LOCATION IN RELATION TO FRONT FACE OF BLOCK CAM BEARING BORE—NO. 1 BEARING ONLY—BELOW	
390	0.005-0.020

CRANKSHAFT

MAIN BEARING JOURNAL STANDARD DIAMETER	
390 (Coded Red)	2.7488-2.7492
(Coded Blue)	2.7484-2.7488
MAIN BEARING JOURNAL MAXIMUM RUNOUT	
390	0.002—Wear Limit 0.003
CONNECTING ROD AND MAIN BEARING JOURNALS MAXIMUM OUT-OF-ROUND	
390	0.0004—Wear Limit 0.0006
CONNECTING ROD AND MAIN BEARING JOURNALS TAPER	
390	0.0003—Wear Limit 0.001
THRUST BEARING JOURNAL LENGTH	
390	1.124-1.126
MAIN BEARING JOURNAL THRUST FACE RUNOUT	
390	0.001
CONNECTING ROD JOURNAL DIAMETER	
390 (Coded Red)	2.4384-2.4388
(Coded Blue)	2.4380-2.4384
CRANKSHAFT FREE END PLAY	
390	0.004-0.008—Wear Limit 0.012
ASSEMBLED FLYWHEEL CLUTCH FACE RUNOUT	
390	0.010
ASSEMBLED FLYWHEEL RUNOUT	
390	0.007
ASSEMBLED SPROCKET OR GEAR FACE RUNOUT	
390	0.006

MAIN BEARINGS

JOURNAL CLEARANCE	
390	0.0006-0.0031—Wear Limit 0.0039

CONNECTING ROD

PISTON PIN BORE OR BUSHING—INSIDE DIAMETER	
Standard	
390	0.9752-0.9755
PISTON PIN BUSHING MAXIMUM OUT-OF-ROUND	
390	0.0004
PISTON PIN BUSHING MAXIMUM TAPER	
390	0.0003
BEARING BORE DIAMETER	
390 (Coded Red)	2.5907-2.5911
(Coded Blue)	2.5911-2.5915
BEARING BORE MAXIMUM OUT-OF-ROUND AND TAPER	
390	0.0004
CONNECTING ROD CENTER-TO-CENTER LENGTH	
390	6.486-6.490
CONNECTING ROD	
Twist Total Difference—Maximum	
390	0.012
Bend Total Difference—Maximum	
390	0.004
CONNECTING ROD ASSEMBLY—Assembled to crankshaft	
Side Clearance	
390	0.006-0.016—Wear Limit 0.019

CONNECTING ROD BEARINGS

BEARING TO CRANKSHAFT CLEARANCE	
390	0.0007-0.0028—Wear Limit 0.0038

PISTON

PISTON DIAMETER	
Red Color Code	
390	4.0477-4.0483
Blue Color Code	
390	4.0489-4.0495
0.003 Oversize	
390	4.0501-4.0507
PISTON TO BORE CLEARANCE ¼ INCH FROM BOTTOM OF SKIRT	
390	0.0017-0.0035—Wear Limit 0.006

PISTON PIN

PISTON PIN DIAMETER	
Standard	
390	0.9750-0.9753
0.001 Oversize	
390	0.9760-0.9763
0.002 Oversize (Color Coded Yellow)	
390	0.9770-0.9773
PISTON PIN LENGTH	
390	3.156-3.170
PISTON PIN TO PISTON CLEARANCE	
390	0.0001-0.0003—Wear Limit 0.0008
PISTON PIN TO CONNECTING ROD BUSHING CLEARANCE	
390	0.0001-0.0005—Wear Limit 0.001

PISTON RINGS

RING WIDTH	
Upper Compression Ring	
390	0.0774-0.0781
Lower Compression Ring	
390	0.0930-0.0940
SIDE CLEARANCE	
Upper Compression Ring	
390	0.0024-0.0041—Wear Limit 0.006
Lower Compression Ring	
390	0.002-0.004—Wear Limit 0.006
Oil Ring	
390	Snug
RING GAP WIDTH	
Compression Ring (Standard Bore—Upper and Lower)	
390	0.015-0.025
Oil Ring (Standard Bore)*	
390	0.015-0.055

*Steel rail

CYLINDER BLOCK

CYLINDER BORE DIAMETER (Standard, spread for 8 grades)	
390	4.0500-4.0524
CYLINDER BORE MAXIMUM OUT-OF-ROUND	
390	0.001—Wear Limit 0.003
CYLINDER BORE TAPER	
390	0.001—Wear Limit 0.005
HEAD GASKET SURFACE FLATNESS	
390	0.003 inch in any 6 inches or 0.006 inch overall

OIL PUMP

RELIEF VALVE SPRING TENSION—LBS. @ SPECIFIED LENGTH	
390	9.0-9.6 .. 1.53 inches
RELIEF VALVE CLEARANCE	
390	0.0015-0.0029
DRIVE SHAFT TO HOUSING BEARING CLEARANCE	
390	0.0015-0.0029
ROTOR ASSEMBLY END CLEARANCE—PUMP ASSEMBLED	
390	0.0011-0.0041
OUTER RACE TO HOUSING—RADIAL CLEARANCE	
390	0.006-0.012
DRIVE SHAFT LENGTH—ROTOR ASSEMBLY FACE TO SHAFT END	
390	2.24-2.26

TORQUE LIMITS (ft-lbs)

MAIN BEARING CAP BOLTS—OILED THREADS	
390	95-105
CYLINDER HEAD BOLTS—OILED THREADS	
390	80-90
OIL PAN TO CYLINDER BLOCK	
390	9-13
MANIFOLDS TO CYLINDER HEAD	
Intake	
390	32-35
Exhaust	
390	12-18
FLYWHEEL TO CRANKSHAFT	
390	75-85
OIL PUMP TO CYLINDER BLOCK	
390	23-28
OIL PUMP COVER PLATE	
390	6-9
OIL FILTER ANGLE ADAPTER TO CYLINDER BLOCK	
390	12-15

TORQUE LIMITS (ft-lbs) (Continued)

CYLINDER FRONT COVER	
390	12-15
WATER OUTLET HOUSING	
390	12-15
WATER PUMP TO CYLINDER BLOCK OR FRONT COVER	
390	23-28
CAMSHAFT SPROCKET TO CAMSHAFT	
390	35-45
DAMPER OR PULLEY TO CRANKSHAFT	
390	70-90
CONNECTING ROD NUTS	
390	40-45
VALVE ROCKER ARM COVER	
390	4-7
VALVE ROCKER SHAFT SUPPORT TO CYLINDER HEAD	
390	40-45
OIL PICK-UP TUBE TO OIL PUMP	
390	12-15
FUEL PUMP TO CYLINDER BLOCK OR CYLINDER FRONT COVER	
390	23-28
ENGINE SUPPORT	
Front Insulator to Engine	
390	35-40
Front Insulator to Intermediate Bracket	
390	30-42
Intermediate Bracket to Cross Member	
390	30-42
Support Retainer to Extension Housing	
390	25-30
Support to End Bracket	
390	30-42

STANDARD TORQUE LIMITS FOR VARIOUS SIZE BOLTS

CAUTION: Special torque limits listed in the preceding tables should be used in preference to these standard limits wherever they apply.

Size (Inches)	¼-20	¼-28	5/16-18	5/16-24	⅜-16	⅜-24
Torque (Foot-Pounds)	6-9	6-9	12-15	15-18	23-28	30-35
Size (Inches)	7/16-14	7/16-20	½-13	½-20	9/16-18	⅝-18
Torque (Foot-Pounds)	45-50	50-60	60-70	70-80	85-95	130-145

1962 FORD THUNDERBIRD SHOP MANUAL

GROUP 2

IGNITION SYSTEM

		PAGE
PART 2-1	IGNITION SYSTEM MAINTENANCE	2-2
PART 2-2	DISTRIBUTOR	2-11
PART 2-3	SPECIFICATIONS	2-16

PART 2-1 IGNITION SYSTEM MAINTENANCE

Section		Page
1	Trouble Diagnosis and Testing	2-2
2	Adjustments, and Repairs	2-6
	Distributor Spark Advance	2-6
	Breaker Points	2-7
	Ignition Timing	2-9
	Spark Plug Wire Replacement	2-9
	Spark Plugs	2-9
	Resistance Wire Replacement	2-10

1 TROUBLE DIAGNOSIS AND TESTING

GENERAL INFORMATION

The ignition system consists of a primary (low voltage) and a secondary (high voltage) circuit (Fig. 1).

The primary circuit consists of the:

1. Battery.
2. Ignition switch.
3. Primary circuit resistance wire.
4. Primary windings of the ignition coil.
5. Breaker points.
6. Condenser.

The secondary circuit consists of the:

1. Secondary windings of the ignition coil.
2. Distributor rotor.
3. Distributor cap.
4. High tension wires.
5. Spark plugs.

Ignition system troubles are caused by a failure in the primary and/or the secondary circuit, or incorrect ignition timing. If an engine trouble has been traced to the ignition system from the "Engine Trouble Diagnosis Guide" in Part 1-1, the trouble can be further isolated to the primary or secondary circuit as follows:

1. Remove the coil high tension lead from the distributor cap.
2. Hold the high tension lead approximately 3/16 inch from the cylinder head.
3. With the ignition switch on, crank the engine and check for a spark.

If the spark is good, the trouble lies in the secondary circuit.

If there is no spark or a weak spark, the trouble is in the primary circuit, coil to distributor high tension lead, or the coil.

A break down or energy loss in the primary circuit can be caused by:

1. Defective primary wiring.
2. Burned or improperly adjusted breaker points.
3. A defective coil.

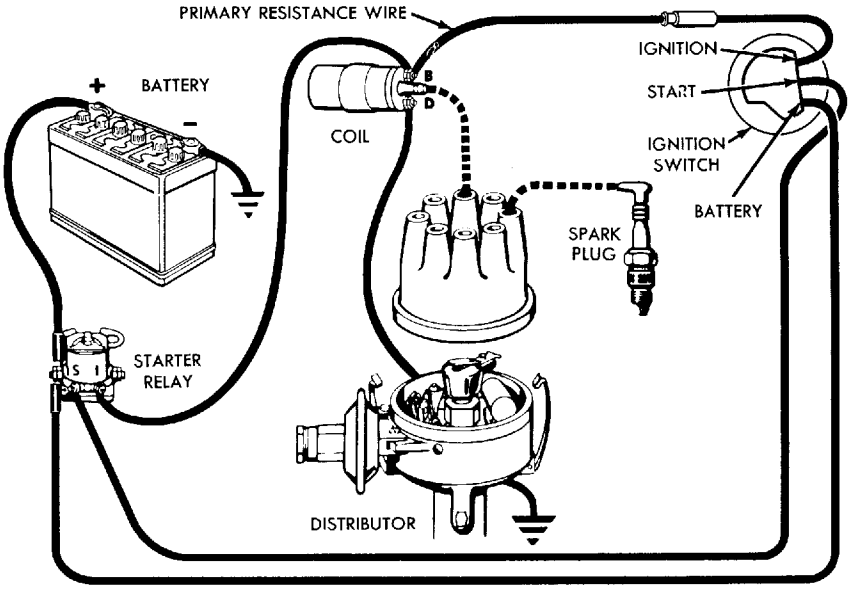

FIG. 1—Ignition Circuit

PROCEDURE

1. Connect the voltmeter leads as shown.
2. Install a jumper wire.
3. Turn the ignition switch on.
4. Turn the accessories and the lights off.

VOLTMETER READING

If the voltmeter reading is 6.9 volts or less, the primary circuit from battery to coil is satisfactory.

If the voltmeter reading is greater than 6.9 volts, check:

1. All components in the battery to coil circuit as outlined under "Preliminary Checks."
2. Resistance wire for defects.
3. Relay to ignition switch for defects.

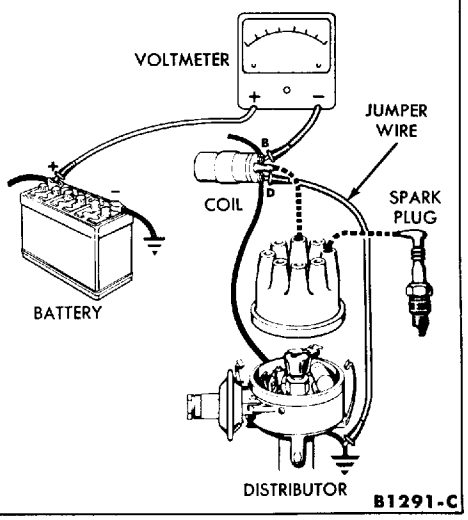

FIG. 2—Battery to Coil Test

PROCEDURE

1. Connect the voltmeter leads as shown.
2. Install a jumper wire.
3. Turn the ignition switch on.
4. Turn the accessories and lights off.

VOLTMETER READING

If the voltmeter reading is 0.3 volt or less, the ignition switch and the relay to switch wire are satisfactory.

If the voltmeter reading is greater than 0.3 volt, either the ignition switch and or the wire are defective.

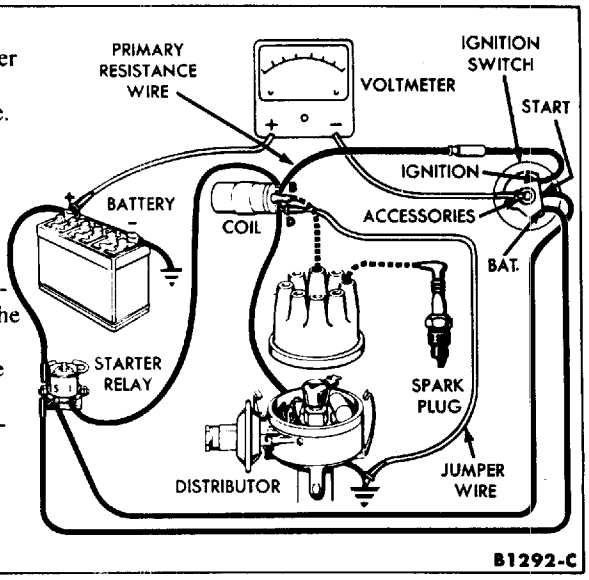

FIG. 3—Ignition Switch Test

4. A defective primary resistance wire.

5. A defective condenser.

A break down or energy loss in the secondary circuit can be caused by:

1. Fouled or improperly adjusted spark plugs.

2. Defective high tension wiring.

3. High tension leakage across the coil, distributor cap, or rotor.

PRIMARY CIRCUIT TESTS

A complete test of the primary circuit consists of checking the circuit from the battery to the coil, from the coil to ground, and the starting ignition circuit. The test procedures are shown in Figs. 2 thru 6.

Excessive voltage drop in the primary circuit will reduce the secondary output of the ignition coil, resulting in hard starting and poor performance.

PRELIMINARY CHECKS

1. Inspect the battery for corrosion due to acid. If necessary, clean the battery and cables with a baking soda solution. Be sure the cable connectors and the contacting surfaces on the battery, engine, and relay are clean. Tighten the cables securely upon installation. Test the battery (Part 9-1).

2. Inspect all the primary wiring for worn insulation, broken strands, and loose or corroded terminals. Replace any defective wiring. Make sure all connections are tight.

BREAKER POINTS

The breaker point assembly consists of the stationary point bracket assembly, breaker arm, and the primary wire terminal.

Breaker points should be inspected, cleaned, and adjusted at specified intervals. Breaker points can be cleaned with chloroform and a stiff bristle brush. Replace the breaker point assembly if the contacts are badly burned or excessive metal transfer between the points is evident (Fig. 7). Metal transfer is considered excessive when it equals or exceeds the gap setting.

COIL

Coil tests can be made with the coil installed on the engine or on a test set. The coil tests include coil heat, secondary continuity, and coil capacity.

A coil may break down after it has reached operating temperature, therefore, a coil heat test is made to test the coil at operating temperature. The coil secondary continuity test is performed to test the coil secondary windings for high resistance. The coil capacity test is made to determine the condition of the windings of the coil.

Perform all tests following the

PROCEDURE

1. Connect the voltmeter leads as shown.
2. Install a jumper wire.
3. Turn the ignition switch on.
4. Turn the accessories and lights off.

VOLTMETER READING

If the voltmeter reading is 6.6 volts or less, the resistance wire is satisfactory.

If the voltmeter reading is greater than 6.6 volts, replace the resistance wire.

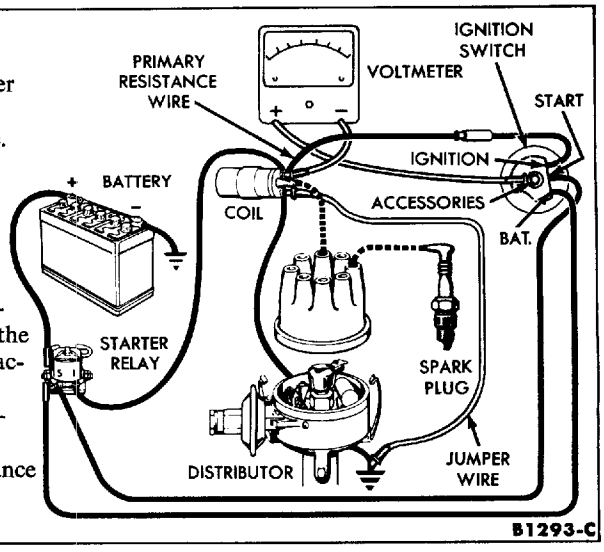

FIG. 4—Resistance Wire Test

PROCEDURE

1. Connect the voltmeter leads as shown.
2. Disconnect the high tension lead from the distributor cap and ground the lead.
3. Using a remote starter switch, crank the engine while observing the voltage drop.

VOLTMETER READING

If the voltage drop is 0.1 volt or less, the starting ignition circuit is satisfactory.

If the voltage drop is greater than 0.1 volt, clean and tighten terminals in the circuit or replace wiring as necessary.

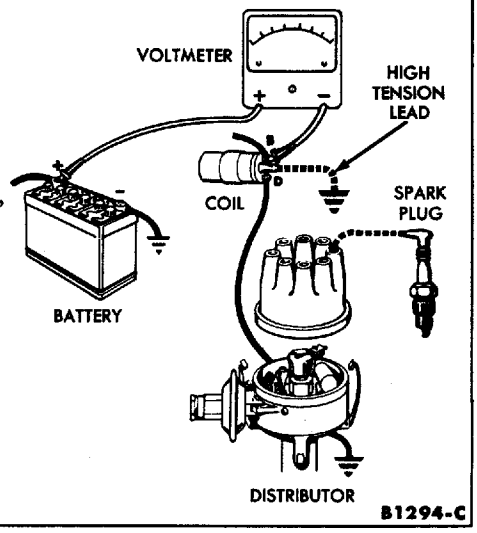

FIG. 5—Starting Ignition Circuit Test

instructions of the test set manufacturer.

CONDENSER

A capacity test, a leakage test, and a series resistance test should be performed on the condenser. The tests can be made with the condenser installed in the distributor or with the condenser installed on a test unit. Use reliable test equipment and follow the instructions of the manufacturer. The capacity is 0.21-0.25 microfarads. Leakage should be 5 megohms or greater at room temperature, and series resistance should be 1 ohm or less. The condenser should be replaced if it does not meet the above specifications.

SECONDARY CIRCUIT TESTS

PRELIMINARY CHECKS

1. Remove the coil to distributor high tension lead and the spark plug wires from the distributor cap and from the spark plugs. Inspect the terminals for looseness and corrosion. Inspect the wires for breaks and cracked insulation. Replace all defective wiring.

2. Clean the inside of the distributor cap, and inspect it for cracks, burned contacts, or permanent carbon tracks. Remove dirt or corrosion from the sockets. Replace the cap if it is defective.

3. Inspect the rotor for cracks or a burned tip. Replace the rotor if it is defective.

SECONDARY (HIGH TENSION) WIRES

The secondary wires include the wires connecting the distributor cap to the spark plugs and the wire connecting the center terminal of the distributor cap to the center terminal of the ignition coil.

These wires are the radio resistance-type which filter out the high frequency electrical impulses that are the source of ignition noise interference. The resistance of each wire should not exceed 24,500 ohms. **When checking the resistance of the wires or when setting ignition timing, do not puncture the wires with a probe. The probe may cause a separation in the conductor.**

At regular intervals, clean and inspect the wires for cracked insulation and loose terminals. Repair or replace the wires as required. A spark plug wire set is available for service.

When removing the wires from the spark plugs, grasp the moulded cap only. Do not pull on the wire because the wire connection inside the cap may become separated or the weather seal may be damaged.

Spark Intensity

1. Disconnect all the spark plug

PROCEDURE

1. Connect the voltmeter leads as shown.
2. Turn the ignition switch on.
3. Turn the accessories and the lights off.
4. Close the breaker points.

VOLTMETER READING

If the voltmeter reading is 0.1 volt or less, the primary circuit from coil to ground is satisfactory.

If the voltmeter reading is greater than 0.1 volt, test the voltage drop of each of the following:

1. Coil to distributor primary wire.
2. The moveable breaker point and the breaker plate.
3. The breaker plate and the distributor housing.
4. The distributor housing and engine ground.

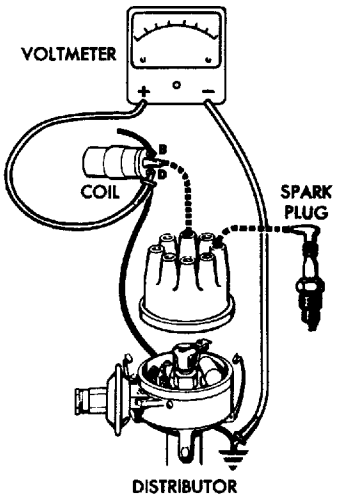

FIG. 6—Coil to Ground Test

CONDITION	CAUSED BY
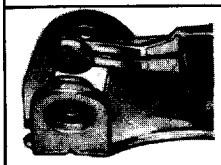 BURNED	Accumulation of oil and dirt on the breaker points from the distributor base bushing or excessive or improper cam lubricant.
 EXCESSIVE METAL TRANSFER OR PITTING	Incorrect alignment. Incorrect voltage regulator setting. Radio condenser installed to the distributor side of the coil. Ignition condenser of improper capacity. Extended operation of the engine at speeds other than normal. B1443-B

FIG. 7—Breaker Point Inspection

wires. **Check the spark intensity of one wire at a time.**

2. Install a terminal adapter in the terminal of the wire to be checked. Hold the adapter approximately 3/16 inch from the exhaust manifold and crank the engine using a remote starter switch. The spark should jump the gap regularly.

3. If the spark intensity of all leads is satisfactory, the coil, condenser, rotor, distributor cap, and the secondary wires are probably satisfactory.

If the spark is good at only some wires, perform a high resistance test of the faulty leads.

If the spark is equal at all wires, but weak or intermittent, make a high resistance check of the coil, distributor cap, and the coil to distributor high tension lead. Follow the instructions of the test set manufacturer when making the tests.

SPARK PLUGS

Inspection. Examine the firing ends of the spark plugs, noting the type of deposits and the degree of electrode erosion. Refer to Fig. 8 for the various types of spark plug fouling and their causes.

Testing. After the proper gap is obtained, test the plugs on a testing machine. Compare the sparking efficiency of the cleaned and regapped plug with a new plug. Replace the plug if it fails to meet requirements.

Test the plugs for compression leakage at the insulator seal. Apply a coating of oil to the shoulder of the plug where the insulator projects through the shell, and to the top of the plug, where the center electrode and terminal project from the insulator. Place the spark plug under pressure. Leakage is indicated by air bubbling through the oil. If the test indicates compression leakage, replace the plug. If the plug is satisfactory, wipe it clean.

IGNITION TIMING

Incorrect ignition timing can be caused by:

1. Timing incorrectly adjusted.

2. Distributor bushing and/or shaft worn, or a bent distributor shaft.

3. Defective vacuum advance system.

4. Defective centrifugal advance.

5. Pre-ignition (caused by spark plugs of the wrong heat range), fouled plugs, improperly adjusted plugs, etc.

DISTRIBUTOR

CAM LOBE ACCURACY

Worn cam lobes will cause the corresponding cylinders to fire out of time and result in a loss of power.

Install the distributor on a test set and check the accuracy of the cam lobes following the instructions of the test equipment manufacturer. If the test indicates that any lobe is worn, replace the cam.

DIAPHRAGM LEAKAGE AND FREENESS OF OPERATION

These tests can be made with the distributor installed on the engine. The tests are sufficient for an engine tune-up. However, if there are indications that the spark advance is not functioning properly, remove the distributor from the engine and check it on a distributor test set following the instructions under "Spark Advance Adjustment."

Check the vacuum advance mechanism for freeness of operation by manually rotating the breaker plate in the direction of rotation. **Do not rotate the plate by pushing on the condenser or the breaker points. Use a hook or other suitable instrument to rotate the plate.** The breaker plate should turn without binding and return to its original position when released. If the breaker plate binds, remove the plate. Clean, inspect, and lubricate it as described for the particular distributor.

To check the diaphragm for leakage:

1. Adjust the vacuum gauge to 25 inches Hg following the instructions of the test set manufacturer.

2. Install the vacuum hose on the diaphragm vacuum line fitting. The vacuum gauge reading should not fall off when the vacuum is applied to the diaphragm assembly if no leak exists.

CONDITION	IDENTIFICATION	CAUSED BY
 OIL FOULING	Wet, sludgy deposits.	Excessive oil entering combustion chamber through worn rings and pistons, excessive clearance between valve guides and stems, or worn or loose bearings.
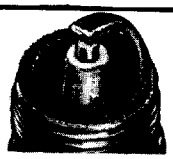 GAS FOULING	Dry, black, fluffy deposits.	Incomplete combustion caused by too rich a fuel-air mixture or by a defective coil, breaker points or ignition cable.
 BURNED OR OVERHEATING	White, burned, or blistered insulator nose and eroded electrodes.	Inefficient engine cooling, or engine overheating caused by improper ignition timing, wrong type of fuel, loose spark plugs, or too hot a plug
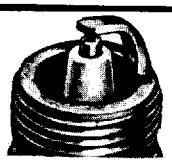 NORMAL CONDITIONS	Rusty brown to grayish-tan powder deposit and minor electrode erosion.	Regular or unleaded gasoline.
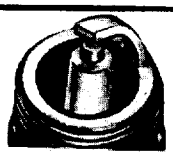 NORMAL CONDITIONS	White, powdery deposits.	Highly leaded gasolines.
 CARBON FOULING	Hard baked on black carbon.	Too cold a plug. B1005-D

FIG. 8—Spark Plug Inspection

If a leak is indicated by the test, replace the diaphragm assembly.

BREAKER PLATE WEAR TEST

A worn breaker plate will cause the breaker point gap and contact dwell to change as engine speed and load conditions are varied. Perform the test following the instructions of the dwell meter manufacturer.

Adjust the test set to 0° advance, 0 inches vacuum, and 1000 rpm. Adjust the dwell angle to 26°. Apply vacuum to the distributor diaphragm and increase it very slowly while observing the indicated dwell angle. The maximum dwell angle variation should not exceed 6° when going from zero to maximum vacuum at constant rpm. If the dwell angle variation exceeds this limit, there is excessive wear at the stationary sub-plate pin or the diaphragm rod is bent or distorted.

DISTRIBUTOR SHAFT END PLAY

If the shaft end play is not to specifications, check the location of the distributor shaft collar.

1. Remove the distributor from the engine.

2. Place the distributor in the holding tool and clamp it in a vise.

3. Push the distributor shaft upward as far as it will go, then check the end play with a feeler gauge placed between the collar and the distributor base. The end play should be to specifications.

2 ADJUSTMENTS AND REPAIRS

DISTRIBUTOR SPARK ADVANCE

The spark advance is checked to determine if the ignition timing advances in proper relation to engine speed and load.

1. Mount the distributor on a test set, and calibrate the test set following the instructions of the manufacturer.

2. Check the contact dwell. If the contact dwell is not between 26°-28½°, or the breaker point gap is not within 0.014-0.016 inch, adjust the breaker points.

3. Check the breaker arm spring tension (17-20 ounces). Adjust it if necessary.

The dual advance distributor has two independently operated spark advance systems. Each system is adjusted separately. **Adjust the centrifugal advance before adjusting the vacuum advance.**

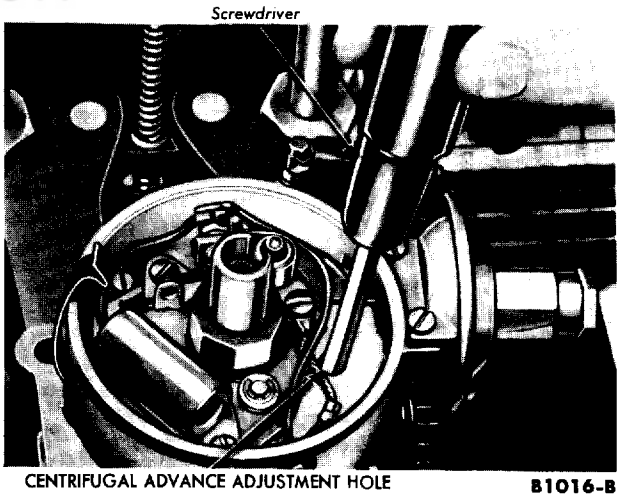

FIG. 9—Centrifugal Advance Adjustment

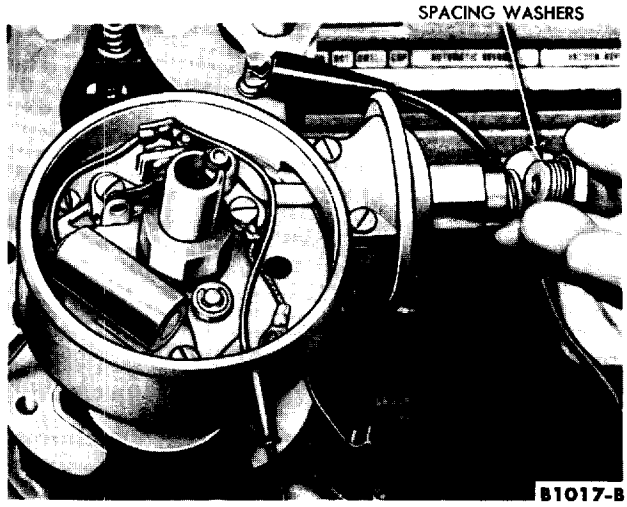

FIG. 10—Vacuum Advance Adjustment

CENTRIFUGAL ADVANCE

1. Do not connect the test set vacuum line to the diaphragm. Set the test set to 0° advance and the initial rpm setting listed in the specifications (Part 2-3).

2. Operate the distributor in the direction of rotation (counterclockwise) and slowly increase the rpm to the setting specified for the first advance reading listed in the specifications (Part 2-3).

If the correct advance is not indicated at this rpm, stop the distributor and bend one spring adjustment bracket to change its tension (Fig. 9). **Bend the adjustment bracket away from the distributor shaft to decrease advance (increase spring tension) and toward the shaft to increase advance (decrease spring tension).** After the adjustment is made, identify the bracket.

3. After an adjustment has been made to one spring, check the minimum advance point again.

4. Operate the distributor at the specified rpm to give an advance just below the maximum. If this advance is not to specifications, stop the distributor and bend the other spring bracket to give the correct advance.

5. Check the advance at all rpm settings listed in the specifications. Operate the distributor both up and down the rpm range.

VACUUM ADVANCE

1. Connect the test set vacuum line to the fitting on the diaphragm.

2. Set the test set to 0° advance, 0 vacuum, and at 1000 rpm.

3. Check the advance at the first vacuum setting given in the specifications (Part 2-3).

4. If the advance is incorrect, change the calibration washers between the vacuum chamber spring and nut (Fig. 10). After installing or removing the washers, position the gasket in place and tighten the nut. **The addition of a washer will decrease advance and the removal of a washer will increase advance.**

5. After one vacuum setting has been adjusted, the others should be checked. **Do not change the original rpm setting when going to a different vacuum setting.** If the other settings are not within limits, it indicates incorrect spring tension, leakage in the vacuum chamber and/or line, or the wrong fiber stop has been installed in the vacuum chamber of the diaphragm housing.

BREAKER POINTS

The breaker point assembly can be replaced without removing the distributor from the engine.

REMOVAL

1. Remove the distributor cap and rotor.

2. Disconnect the primary and condenser leads.

3. Remove the screws that secure the breaker point assembly to the breaker plate. Remove the breaker point assembly.

INSTALLATION

1. Place the primary and condenser leads on the breaker point assembly primary terminal. Install the lock washer and nut. Tighten the nut securely.

2. Position the breaker point assembly on the breaker plate. Install the hold-down screws. Make sure the ground wire terminal is on the screw furthest from the adjustment slot.

3. Adjust the breaker point gap or dwell.

BREAKER POINT GAP OR DWELL

As the pivot plate is rotated from retard (no vacuum) position to full advance position, the dwell decreases slightly (point opening increases). This is because the breaker point rubbing block and the cam rotate on a different axis.

New breaker points. New breaker points can be adjusted with a feeler gauge or a dwell meter.

To adjust the breaker points with a feeler gauge:

1. Check and adjust breaker point alignment. Rotate the distributor cam until the rubbing block rests on the peak of a cam lobe.

2. Insert the correct blade of a clean feeler gauge between the breaker points (Fig. 11). The gap should be set to the larger opening 0.016 inch because the rubbing block will wear down slightly while seating to the cam.

3. Apply a light film of high-temperature, non-fiber grease to the cam when new points are installed. **Do not use engine oil to lubricate the distributor cam.**

4. Set the ignition timing.

If a dwell meter is used to adjust new points, be sure the points are in

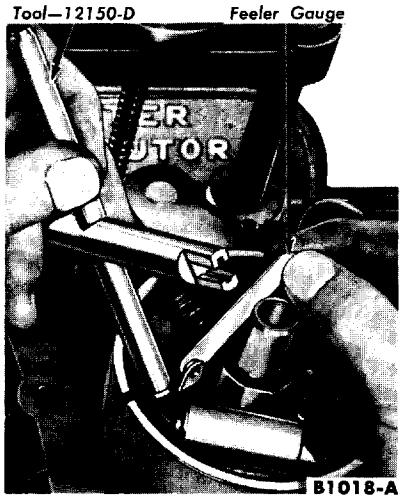

FIG. 11—Adjusting New Breaker Point Gap

proper alignment. Also, set the contact dwell to the low setting (26°). New points must be set to the low dwell as the rubbing block will wear down slightly while seating to the cam.

Used breaker points. If the gap of used breaker points is being checked, use a dwell meter to test the contact dwell. It is not advisable to use a feeler gauge to adjust or to check the gap of used breaker points because the roughness of the points make an accurate gap reading or setting impossible. Clean the breaker points. Check and adjust the alignment. Check the contact dwell following the instructions of the dwell meter manufacturer. The contact dwell should be 26°-28½°. Check and adjust the ignition timing.

BREAKER POINT ALIGNMENT

The vented-type breaker points must be accurately aligned and strike squarely in order to realize the full advantages provided by this design, and assure normal breaker point life. Any misalignment of the breaker point surfaces will cause premature wear, overheating, and pitting.

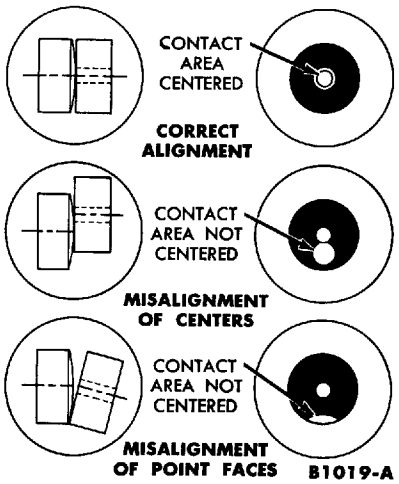

FIG. 12—Breaker Point Alignment

1. Turn the cam so that the breaker points are closed and check the alignment of the points (Fig. 12).

2. Align the breaker points to make full face contact by bending the stationary breaker point bracket (Fig. 13). **Do not bend the breaker arm.**

3. After the breaker points have been properly aligned, adjust the breaker point gap or dwell.

BREAKER POINT SPRING TENSION

Correct breaker point spring tension is essential to proper engine operation and normal breaker point life. If the spring tension is too great, rapid wear of the breaker arm rubbing block will result, causing the breaker point gap to close up and retard the spark timing. If the spring tension is too weak, the breaker arm

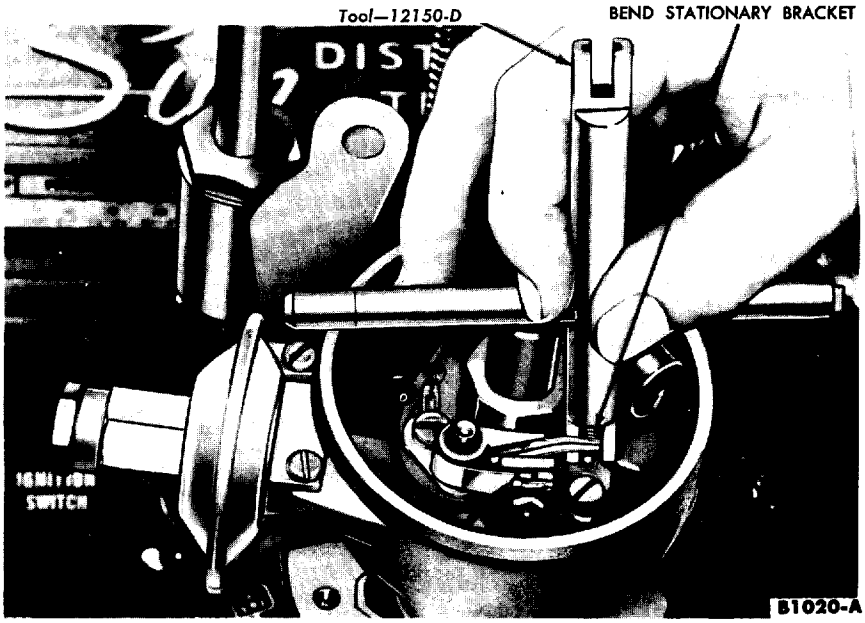

FIG. 13—Aligning Breaker Points

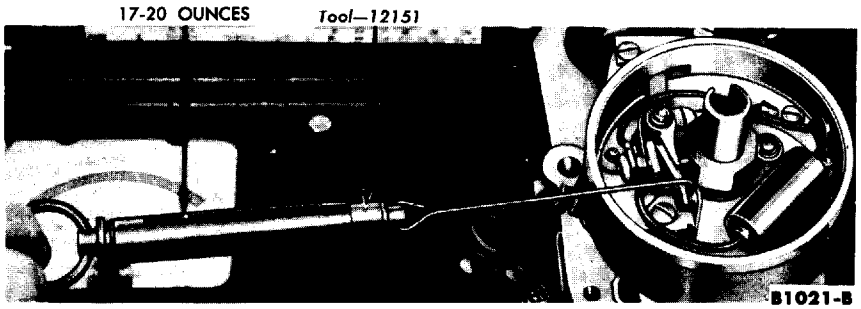

FIG. 14—Checking Breaker Point Spring Tension

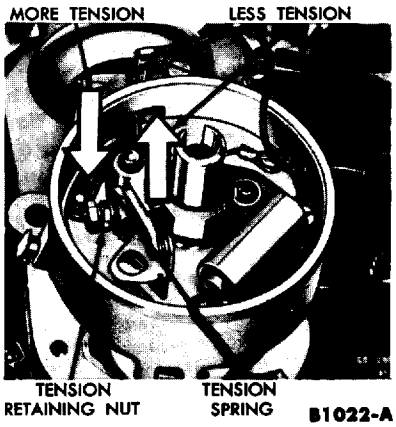

FIG. 15—Adjusting Spring Tension

will flutter at high engine rpm resulting in an engine miss.

To check the spring tension, place the hooked end of the spring tension gauge over the movable breaker point. Pull the gauge at a right angle (90°) to the movable arm until the breaker points just start to open (Fig. 14). If the tension is not within specifications (17-20 ounces), adjust the spring tension.

To adjust the spring tension (Fig. 15):

1. Disconnect the primary and condenser leads at the breaker point assembly primary terminal.

2. Loosen the nut holding the spring in position. Move the spring toward the breaker arm pivot to decrease tension and in the opposite direction to increase tension.

3. Tighten the lock nut, then check spring tension. Repeat the adjustment until the specified spring tension is obtained.

4. Install the primary and condenser leads with the lock washer and tighten the nut securely.

IGNITION TIMING

The timing pointer has 4 timing marks ranging from 0 (TDC) to 10° before top center (BTC). The crankshaft damper has a timing pin. To adjust ignition timing, align the pin on the damper with the proper timing mark on the timing pointer (Fig. 16).

1. Disconnect the distributor vacuum line. Connect the timing light high tension lead to the No. 1 spark plug and the other two leads of the timing light to the battery terminals. **Do not puncture the spark plug wire or moulded cap.**

2. Clean the dirt from the timing marks and, if necessary, chalk the timing pin to improve legibility.

3. Operate the engine at idle speed. Be sure the engine is idling below 550 rpm so that there will be no centrifugal advance. The timing light should flash just as the proper mark lines up with the pin, indicating correct timing. The operator's eye should be in line with the center of the damper and the timing pointer.

4. If the proper timing mark and the pin do not line up, rotate the distributor until the correct mark and the pin are aligned (Fig. 17).

The timing is advanced by clockwise rotation of the distributor body, and retarded by counterclockwise rotation.

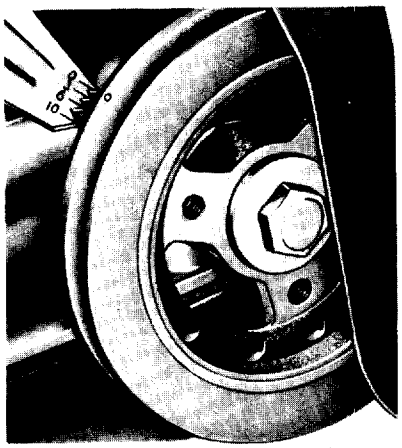

SEE SPECIFICATIONS FOR IGNITION TIMING SETTINGS B1209-B

FIG. 16—Timing Marks

5. After the ignition timing has been properly set, connect the distributor vacuum line.

6. Check the distributor to determine if the advance mechanism is operating. To do this, hold the timing light so that the timing marks and pin can be seen, and accelerate the engine. If no advance is evident, one of the following is the probable cause:

1. No vacuum available at the distributor.

2. Vacuum diaphragm leaking.

3. Diaphragm link disconnected from the breaker plate.

4. Breaker plate binding in the housing or on the bushing.

5. Centrifugal advance not functioning properly.

SPARK PLUG WIRE REPLACEMENT

When removing the wires from the spark plugs, grasp the moulded cap only. Do not pull on the wire because the wire connection inside the cap may become separated or the weather seal may be damaged.

The ignition wiring installation is shown in Fig. 18.

REMOVAL

1. Disconnect the wires from the spark plugs and distributor cap.

2. Pull the wires from the brackets on the valve rocker arm covers and remove the wires.

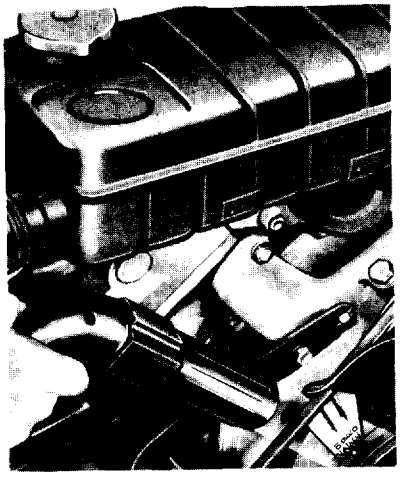

B1377-B

FIG. 17—Checking Ignition Timing

3. Remove the coil high tension lead.

INSTALLATION

1. Insert each wire in the proper socket of the distributor cap. Be sure the wires are forced all the way down into their sockets. The No. 1 socket is identified on the cap. Install the wires in a counterclockwise direction in the firing order (1-5-4-2-6-3-7-8) starting at the No. 1 socket. Cylinders are numbered from front to rear: right bank 1-2-3-4, left bank 5-6-7-8.

2. Remove the brackets from the old spark plug wire set and install them on the new set in the same relative position. Install the wires in the brackets on the valve rocker arm covers (Fig. 18). Connect the wires to the proper spark plugs. Install the coil high tension lead. **Be sure No. 7 spark plug wire is positioned in the bracket as shown in Fig. 18.**

SPARK PLUGS

REMOVAL

1. Remove the wire from each spark plug by grasping the moulded cap of the wire only. **Do not pull on the wire because the wire connection inside the cap may become separated or the weather seal may be damaged.**

2. Clean the area around each spark plug port with compressed air, then remove the spark plugs.

INSTALLATION

1. Install the spark plugs and torque each plug to specifications.

2. Connect the spark plug wires. Push all weather seals into position.

FIRING ORDER 1-5-4-2-6-3-7-8

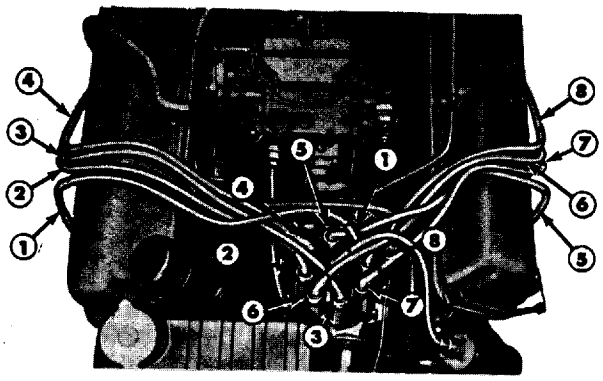

FIG. 18—Ignition Wiring

CLEANING

Clean the plugs on a sand blast cleaner, following the manufacturer's instructions. **Do not prolong the use of the abrasive blast as it will erode the insulator.** Remove carbon and other deposits from the threads with a stiff wire brush. Any deposits will retard the heat flow from the plug to the cylinder head causing spark plug overheating and pre-ignition.

Clean the electrode surfaces with a small file (Fig. 19). Dress the electrodes to secure flat parallel surfaces on both the center and side electrode.

After cleaning, examine the plug carefully for cracked or broken insulators, badly pitted electrodes, and other signs of failure. Replace as required.

ADJUSTMENT

Set the spark plug gap (0.032-0.036 inch) by bending the ground electrode (Fig. 20).

RESISTANCE WIRE REPLACEMENT

Because of its resistance do not attempt to splice the ignition resistance wire.

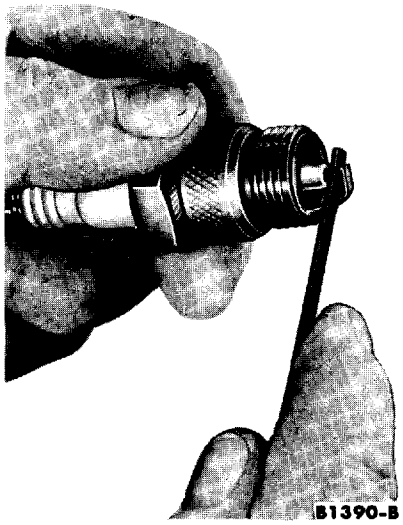

FIG. 19—Cleaning Plug Electrode

1. Fabricate a 3-inch 16-gauge jumper wire with a bullet-type terminal on one end and an eyelet-type terminal on the other end. Solder the terminals to the wire.

2. Disconnect the defective resistor wire (pink) from the coil terminal of the ignition switch. Cut the wire off at the point where it enters the taped area of the harness.

3. Connect the 3-inch jumper wire to the coil terminal of the ignition switch. Connect the replacement resistor wire to the other end of the jumper wire, using a bullet terminal connector.

4. Route the replacement resistor wire along the harness, and through the grommet in the dash panel. Tape the wire to the harness where necessary to prevent it from hanging loose.

5. Disconnect the defective resistor wire from the bullet connector in the engine compartment, and connect the replacement wire in its place.

6. Cut the defective wire off at the point where it enters the taped area of the harness.

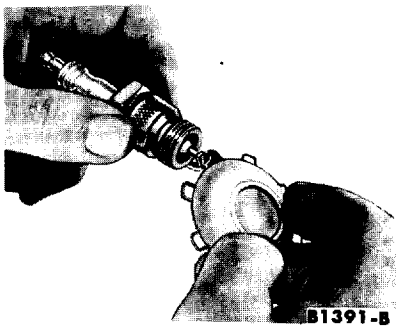

FIG. 20—Gapping Spark Plug

PART 2-2 DISTRIBUTOR

Section		Page
1	Distributor Operation	2-11
2	Distributor Removal and Installation	2-12
3	Distributor Disassembly, Cleaning, Inspection, and Assembly	2-12

1 DISTRIBUTOR OPERATION

The distributor is mounted at the front of the cylinder block. The direction of distributor rotation is counterclockwise as viewed from the top of the distributor.

The dual advance distributor (Fig. 1) has two independently operated spark advance systems. A governor-type centrifugal advance mechanism is located below the stationary sub-plate (Fig. 2), and a vacuum operated spark control diaphragm is located on

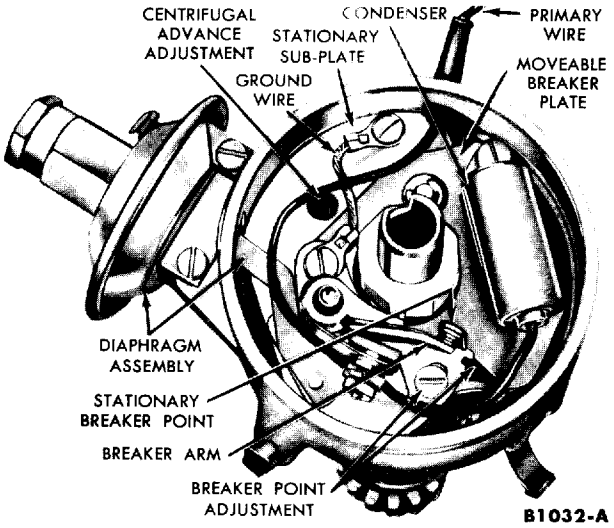

FIG. 1—Dual Advance Distributor

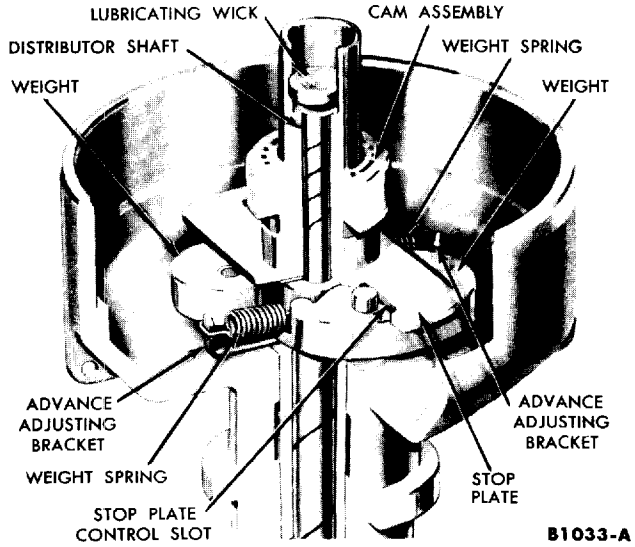

FIG. 2—Centrifugal Advance Mechanism

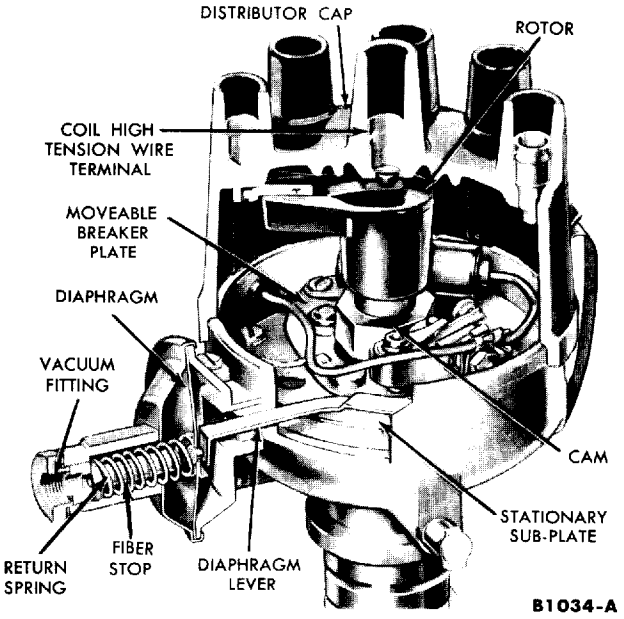

FIG. 3—Vacuum Advance Mechanism

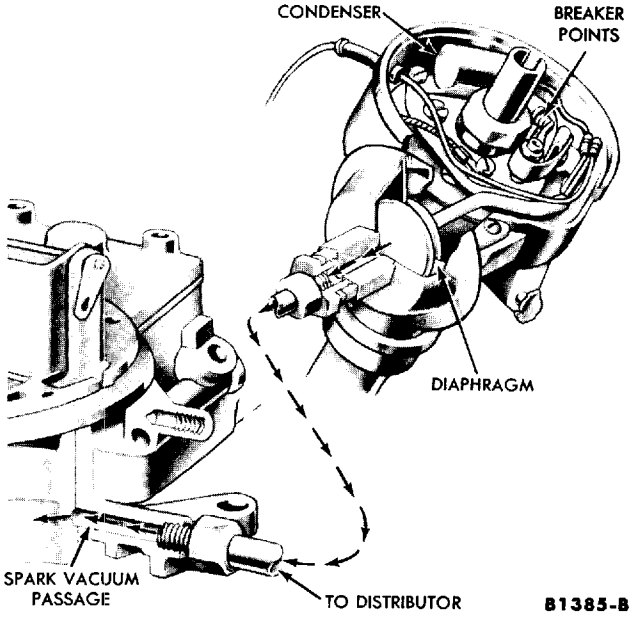

FIG. 4—Vacuum Advance Controls

the side of the distributor base (Fig. 3).

The centrifugal weights cause the cam to advance or move ahead with respect to the distributor drive shaft. This action causes the cam to open and close the breaker points earlier. The weights turn the cam by means of a stop plate that has two slots which fit over pins in the weights. The slots determine the maximum amount of advance and the rate of advance is controlled by calibrated springs.

The vacuum advance mechanism has a spring-loaded diaphragm (Fig. 4) which is connected to the breaker plate. The spring loaded side of the diaphragm is air tight and is connected through a vacuum line to the carburetor throttle bore. When the throttle plates open, the distributor vacuum passage is exposed to manifold vacuum which causes the diaphragm to move against the tension of the spring. This action causes the movable breaker plate to pivot on the stationary sub-plate. The contact-point rubbing block, which is positioned on the opposite side of the cam from the pivot pin, then moves against distributor rotation and advances the spark timing. The breaker points open and close earlier when the spark timing is advanced. As the movable breaker plate is rotated from retard (no vacuum) position to full advance position, the dwell decreases slightly (point opening increases). This is because the breaker point rubbing block and the cam rotate on different axes.

When the engine is operated under a light load, additional advance is required for maximum part-throttle power and economy. Under this condition, engine manifold vacuum is high enough to actuate the diaphragm and advance the spark. The maximum spark advance is limited by a stop. At low engine speeds, or at idle, spark advance is not necessary. Because the vacuum passage opening in the carburetor is above the closed throttle plate, there is no vacuum to the diaphragm. The breaker plate is held in a retarded position by the calibrated return spring which bears against the diaphragm.

During acceleration or when there is a heavy load on the engine, there is not enough vacuum to actuate the diaphragm, and the breaker plate once again is held in a retarded position.

When the engine is being operated under a light load, such as on a level road at 40 mph, and the throttle is suddenly opened further, the manifold vacuum will decrease and the diaphragm spring will quickly force the breaker plate to a retard position. However, the advance provided by the centrifugal mechanism remains unchanged until the engine speed changes. At any particular engine speed, there will be a certain amount of centrifugal advance plus a **possible** vacuum advance.

2 DISTRIBUTOR REMOVAL AND INSTALLATION

DISTRIBUTOR REMOVAL

1. Disconnect the primary wire at the coil. Disconnect the vacuum advance line at the distributor. Remove the distributor cap.

2. Scribe a mark on the distributor body and engine block indicating the position of the body in the block. Scribe another mark on the distributor body indicating the position of the rotor. These marks can be used as guides when installing the distributor in a correctly timed engine.

3. Remove the distributor hold down cap screw and clamp. Lift the distributor out of the block.

DISTRIBUTOR INSTALLATION

The distributor installation is shown in Fig. 5.

1. If the crankshaft was rotated while the distributor was removed from the engine, it will be necessary to time the engine. Rotate the crankshaft until No. 1 piston is on T.D.C. (after the compression stroke). Align the pin on the crankshaft damper with the 0 on the timing pointer. Position the distributor in the block with the rotor at the No. 1 firing position and the breaker points open.

FIG. 5—Distributor Installation

Make sure the oil pump intermediate shaft properly engages the distributor shaft. It may be necessary to crank the engine with the starter, after the distributor drive gear is partially engaged, in order to engage the oil pump intermediate shaft.

2. If the crankshaft has not been rotated, position the distributor in the block using the marks previously scribed on the distributor body and engine block as guides.

3. Install the rotor and the distributor cap. Connect the coil to distributor cap high tension lead, and connect the primary wire to the coil.

4. Check the ignition timing with a timing light and adjust it if necessary. Connect the vacuum line, and check the advance with the timing light when the engine is accelerated.

3 DISTRIBUTOR DISASSEMBLY, CLEANING, INSPECTION, AND ASSEMBLY

DISTRIBUTOR DISASSEMBLY

1. Remove the rotor. Remove the spring clip securing the diaphragm link to the breaker plate. Disconnect the diaphragm assembly from the distributor base.

2. Lift the diaphragm link off the pin and remove the diaphragm assembly.

3. Disconnect the primary and condenser wires from the breaker point terminal.

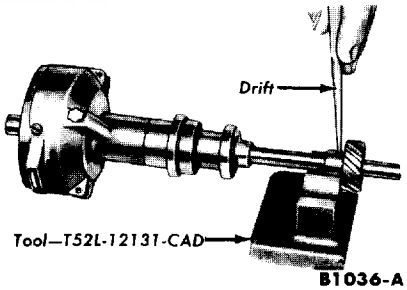

FIG. 6—Gear Pin Removal or Installation

4. Working from the inside of the distributor, remove the primary wire by pulling it through the opening in the distributor.

5. Remove the breaker point assembly and condenser.

6. Remove the lubricating wick. Using needle nose pliers, remove the cam retainer.

7. Remove the moveable breaker plate spring retainer and washers.

8. Remove the stationary sub-plate screws. Remove the sub-plate, breaker plate, and cam as an assembly.

9. Remove the upper thrust washer.

10. Carefully unhook and remove the distributor weight springs. Mark each spring, bracket, and the adjusting post to which it is attached.

11. Remove the weights.

12. Remove the distributor cap clamps.

13. **If the gear and shaft are to be used again, mark the gear and shaft so the pin holes can be easily aligned for assembly.** Remove the gear roll pin (Fig. 6), then remove the gear (Fig 7).

14. Remove the shaft collar roll pin (Fig 8).

15. Invert the distributor and place it on a support plate in a position that will allow the distributor shaft to

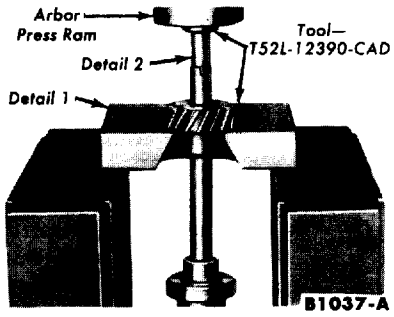

FIG. 7—Gear Removal

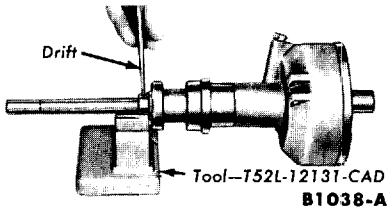

FIG. 8—Collar Retaining Pin Removal or Installation

clear the support plate. Press the shaft out of the collar and the distributor housing (Fig. 9).

16. Remove the distributor shaft bushing (Fig. 10).

17. Remove the oil seal from the distributor housing.

DISTRIBUTOR CLEANING AND INSPECTION

Soak all parts of the distributor assembly (except the condenser, breaker point assembly, lubricating wick, vacuum diaphragm, distributor base oil seal, and electrical wiring) in a mild cleaning solvent or mineral spirits. **Do not use a harsh cleaning solution.** Wipe all parts that cannot be immersed in a solvent with a clean dry cloth.

After foreign deposits have been loosened by soaking, scrub the parts with a soft bristle brush. **Do not use a wire brush, file, or other abrasive object.** Dry the parts with compressed air.

Examine the bushing surface of the distributor shaft and the bushing for wear. The minimum allowable shaft diameter at the bushing is 0.4675 inch and the maximum allowable inside diameter of the bushing is 0.4690 inch. Replace worn parts.

Inspect the distributor cam lobes for scoring and signs of wear. If any lobe is scored or worn, replace the cam assembly.

Inspect the sub-plate assembly for signs of distortion. It must fit into the base without binding. The pivot pin must be tight and perpendicular to the sub-plate. The three nylon buttons must be firmly seated in the plate and uniform in height. Replace the sub-plate assembly if it is defective.

Inspect the breaker plate for signs of distortion. The pivot pin bushing must be securely attached to the breaker plate. Replace the breaker plate assembly if it is defective.

The breaker point assembly and condenser should be replaced whenever the distributor is overhauled.

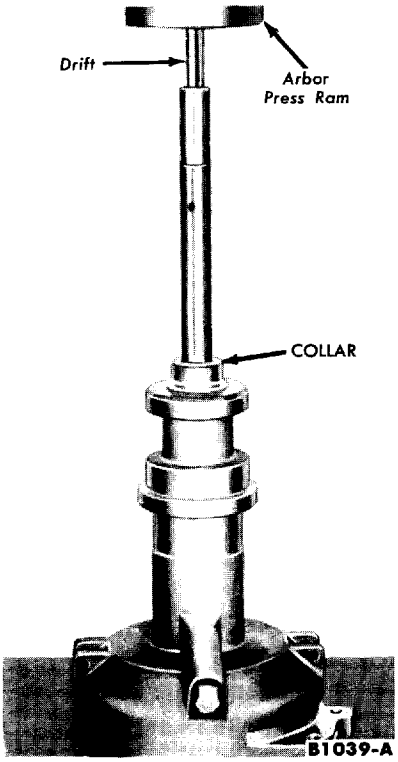

FIG. 9—Shaft Removal

Inspect all electrical wiring for fraying, breaks, etc., and replace any that are not in good condition.

Check the distributor base for cracks or other damage. Check the diaphragm housing, bracket, and link

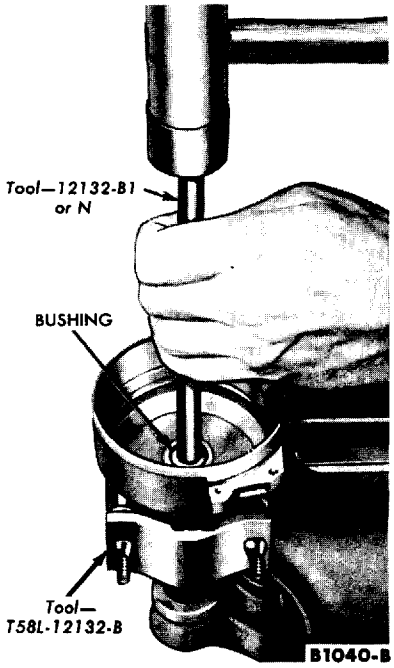

FIG. 10—Bushing Removal

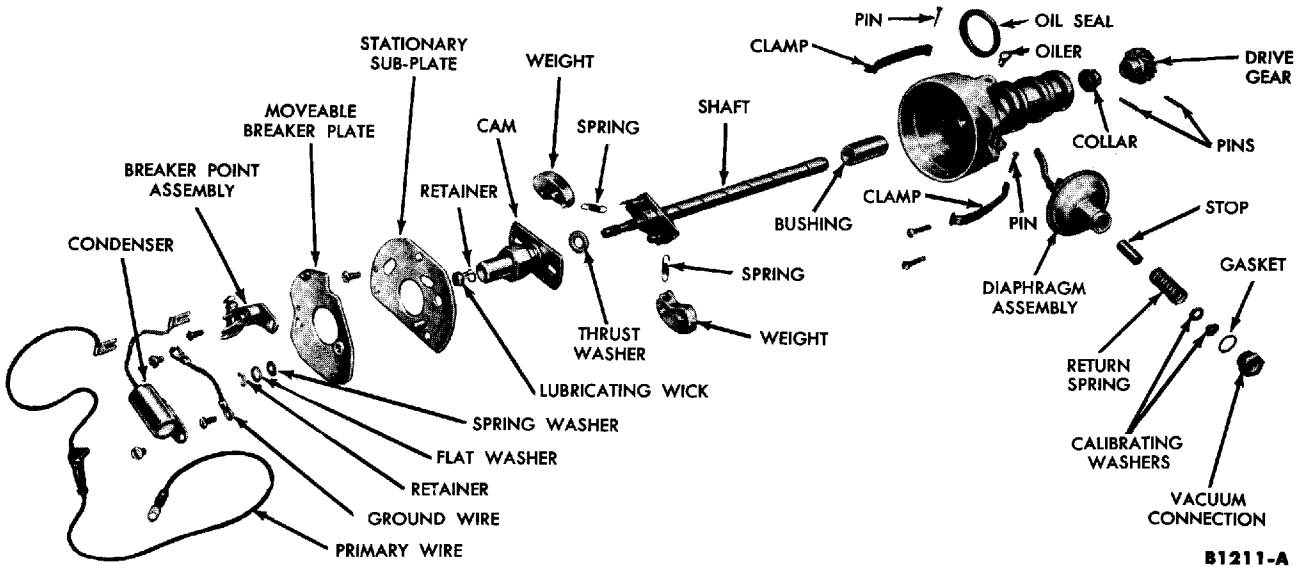

FIG. 11—Distributor Assembly

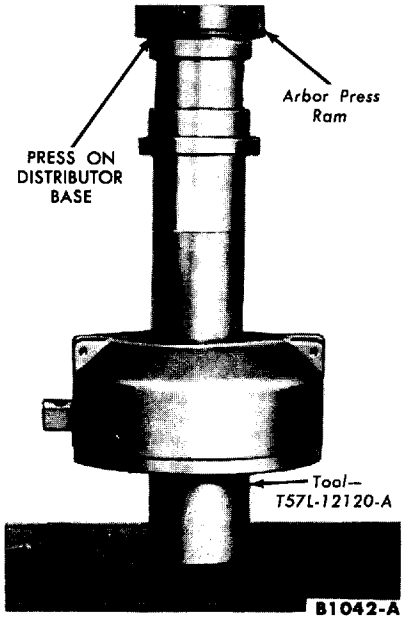

FIG. 12—Bushing Installation

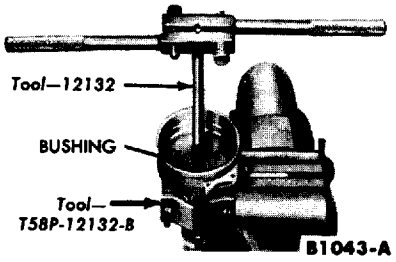

FIG. 13—Burnishing Bushing

for damage. Check the vacuum line fitting for stripped threads or other damage. Test the vacuum fittings, case, and diaphragm for leakage as explained under "Distributor Tests and Adjustments" in Part 2-1. Replace all defective parts.

DISTRIBUTOR ASSEMBLY

Refer to Fig. 11 for the correct location of the parts.

INSTALLING ORIGINAL SHAFT AND GEAR

1. Oil the new bushing, and install it on the bushing replacer tool. Install the bushing (Fig. 12). When the tool bottoms against the distributor base, the bushing will be installed to the correct depth.

2. Burnish the bushing to the proper size (Fig. 13).

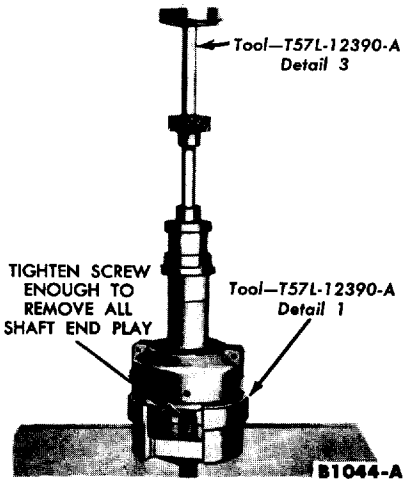

FIG. 14—Gear Installation

3. Oil the shaft and slide it into the distributor body.

4. Place the collar in position on the shaft and align the holes in the collar and shaft, then install a new pin (Fig. 8). Install the distributor cap clamps.

5. Check the shaft end play with a feeler gauge placed between the collar and the base of the distributor. If the end play is not within limits (0.022-0.030 inch) replace the shaft and gear.

6. Attach the distributor shaft supporting tool to the distributor. Tighten the backing screw in the tool enough to remove all shaft end play.

7. Install the assembly in a press. Press the gear on the shaft (Fig. 14), using the marks made on the gear and shaft as guides to align the pin holes.

8. Remove the distributor from the press. Install the gear retaining pin (Fig. 6).

9. Position the distributor in a vise. Fill the grooves in the weight pivot pin with a high melting point ball bearing lubricant.

10. Position the weights in the distributor.

11. Install the weight springs. Be sure the proper weight, spring, and adjustment bracket are assembled together.

12. Install the upper thrust washer.

13. Fill the grooves in the upper portion of the distributor shaft with a high melting point ball bearing lubricant.

14. Install the cam assembly (Fig.

FIG. 15—Cam Installation

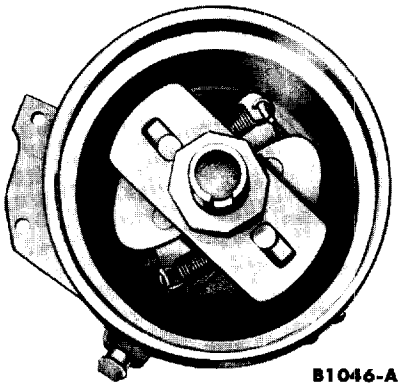

FIG. 16—Weights, Springs, and Cam Installed

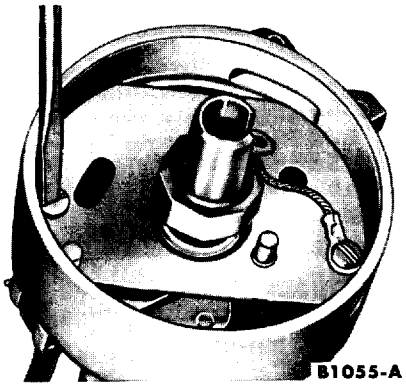

FIG. 17—Sub-Plate Installation

15). Be sure that the slots in the cam engage the pins in the weights.

15. Install the cam retainer. Apply a light film of cam lubricant to the cam lobes. Saturate the wick with SAE 10W engine oil. Install the wick in the cam assembly. The weights, springs, and cam are shown installed in Fig. 16.

16. Position the stationary sub-plate in the distributor. Install one end of the ground wire under the plate retaining screw closest to the diaphragm mounting flange (Fig. 17).

17. Position the movable breaker plate in the distributor. Install the spring washer on the pivot pin. Place the flat washer on the spring washer. Be sure the protruding edges of the spring washer are facing upward. Install the retainer.

18. Install a new breaker point assembly. Install the ground wire on the breaker point attaching screw furthest from the breaker point adjustment slot.

19. Install a new condenser.

20. Working from the inside to the outside of the distributor housing, pass the primary wire assembly through the opening in the distributor. Pull the wire through the opening until the locating stop is flush with the inside of the distributor.

21. Connect the condenser wire and the primary wire to the breaker points.

22. Position the diaphragm assembly and hook the diaphragm link over the pin on the breaker plate. Install the diaphragm assembly retaining screws. Secure the diaphragm link with a spring retainer. Install the oil seal.

23. Refer to Part 2-1 and make the following adjustments:

Breaker point spring tension.

Align the breaker points and adjust the gap.

Check the breaker point dwell and resistance.

Centrifugal and vacuum advance.

INSTALLING NEW SHAFT AND GEAR

The shaft and gear are replaced as an assembly. One part should not be replaced without replacing the other. Refer to Fig. 11 for the correct location of the parts.

1. Follow steps 1 thru 3 under "Installing Original Shaft and Gear."

2. Attach the distributor shaft supporting tool to the distributor and position the assembly in a vise. Insert a 0.002-inch feeler gauge between the backing screw and the shaft. Tighten the backing screw on the tool enough to remove all shaft end play. Remove the feeler gauge and allow the shaft to rest on the backing screw. Slide the collar on the shaft. While holding the collar in place against the distributor base (Fig. 18), drill a ⅛-inch hole through the shaft using the access opening in the collar as a pilot.

3. Position the gear on the end of the shaft. Position the assembly in a press.

4. With the backing screw on the support tool tightened enough to remove all end play, press the gear on the shaft so that the distance from the bottom face of the gear to the bottom face of the distributor mounting flange is to specifications (Fig. 18). Drill a ⅛-inch hole through the shaft using the hole in the gear as a pilot.

5. Remove the distributor from the press and remove the support tool. Install the collar retaining pin (Fig. 8) and the gear retaining pin (Fig. 6).

6. Complete the assembly by following steps 9 thru 23 under "Installing Original Shaft and Gear."

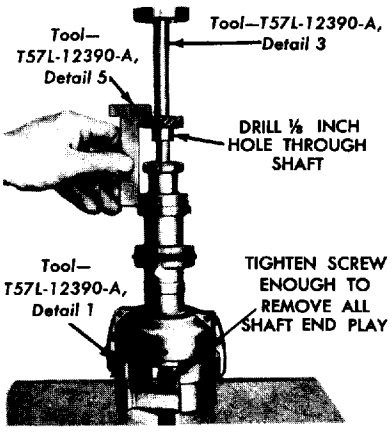

FIG. 18—New Shaft Installation

PART 2-3 SPECIFICATIONS

DISTRIBUTOR

GENERAL

Breaker Arm Spring Tension (Ounces)	17-20
Contact Spacing (Inches)	0.014-0.016
Dwell Angle at Idle Speed	26°-28½°

GEAR LOCATION DIMENSION

Distance from bottom of mounting flange to bottom of gear (Inches)	3.077-3.071

SHAFT END PLAY CLEARANCE (INCHES)

390 Engine	0.022-0.030

ADVANCE CHARACTERISTICS

Note: The advance characteristics given apply to the distributor with the indicated number only. The distributor number is stamped on the distributor housing or on a plate attached to the distributor housing.

DISTRIBUTOR NO. C2SF-12127-A

CENTRIFUGAL ADVANCE. Set test stand to 0° @ 250 rpm. Disconnect the vacuum line.

Distributor RPM	Advance (Degrees)	Vacuum (Inches of Mercury)
325	0	0
425	1¼-2¼	0
550	5-6	0
700	7½-8½	0
2000	13-14½	0

VACUUM ADVANCE. Set test stand to 0° @ 1000 rpm and 0 inches of vacuum.

Distributor RPM	Advance (Degrees)	Vacuum (Inches of Mercury)
1000	0-2½	6
1000	4-7	10
1000	5½-8½	15

Maximum Advance Limit @ 20 HG ..... 8½°

IGNITION TIMING

Recommended Setting	8° BTDC

CONDENSER

Capacity (Microfarads)	0.21-0.25
Minimum Leakage (Megohms)	5
Maximum Series Resistance (Ohms)	1

COIL

Primary Resistance (Ohms)*	1.40-1.54 (75°F.)
Secondary Resistance (Ohms)	8000-8800 (75°F.)
Amperage Draw	
Engine Stopped	4.5
Engine Idling	2.5
*Primary Circuit Resistor	1.30-1.40 (75°F.)

SPARK PLUGS

Type	Auto Lite BF-42
Size	18 mm
Gap (Inches)	0.032-0.036
Torque (Ft-lbs)	15-20*

*When a new spark plug is installed in a new replacement cylinder head torque the spark plugs to 20-30 ft-lbs.

1962 FORD THUNDERBIRD SHOP MANUAL

GROUP 3

FUEL SYSTEM

PAGE

PART 3-1 FUEL SYSTEM MAINTENANCE 3-2

PART 3-2 CARBURETOR 3-8

PART 3-3 FUEL PUMP, FUEL TANK, AND FUEL LINES 3-18

PART 3-4 SPECIFICATIONS 3-20

PART 3-1 FUEL SYSTEM MAINTENANCE

Section	Page
1 Trouble Diagnosis and Testing	3-2
Fuel Tank and Lines	3-2
Fuel Pump	3-2
Carburetor	3-3
2 Fuel Filter Maintenance	3-5
3 Carburetor In-Chassis Adjustments	3-5
Engine Idle Speed	3-5
Idle Fuel Mixture	3-6
Anti-Stall Dashpot	3-6
Accelerating Pump Stroke	3-6
Automatic Choke	3-6
4 Air Cleaner	3-7

1 TROUBLE DIAGNOSIS AND TESTING

The fuel system installation is shown in Fig. 1.

FUEL TANK AND LINES

Water and dirt that accumulate in the fuel tank can cause carburetor or fuel pump malfunction. Condensation, which is the greatest source of water entering the fuel tank, is formed by moisture in the air when it strikes the cold interior walls of the fuel tank.

FUEL PUMP

Incorrect fuel pump pressure and low capacity are the two most likely fuel pump troubles that will affect engine performance. Low pressure will cause a lean mixture at high speeds and excessive pressure will cause high fuel consumption and carburetor flooding. Low capacity will cause fuel starvation at high speeds.

TESTS

The tests are performed with the fuel pump installed on the engine. Be sure the fuel filter is clean before performing the tests.

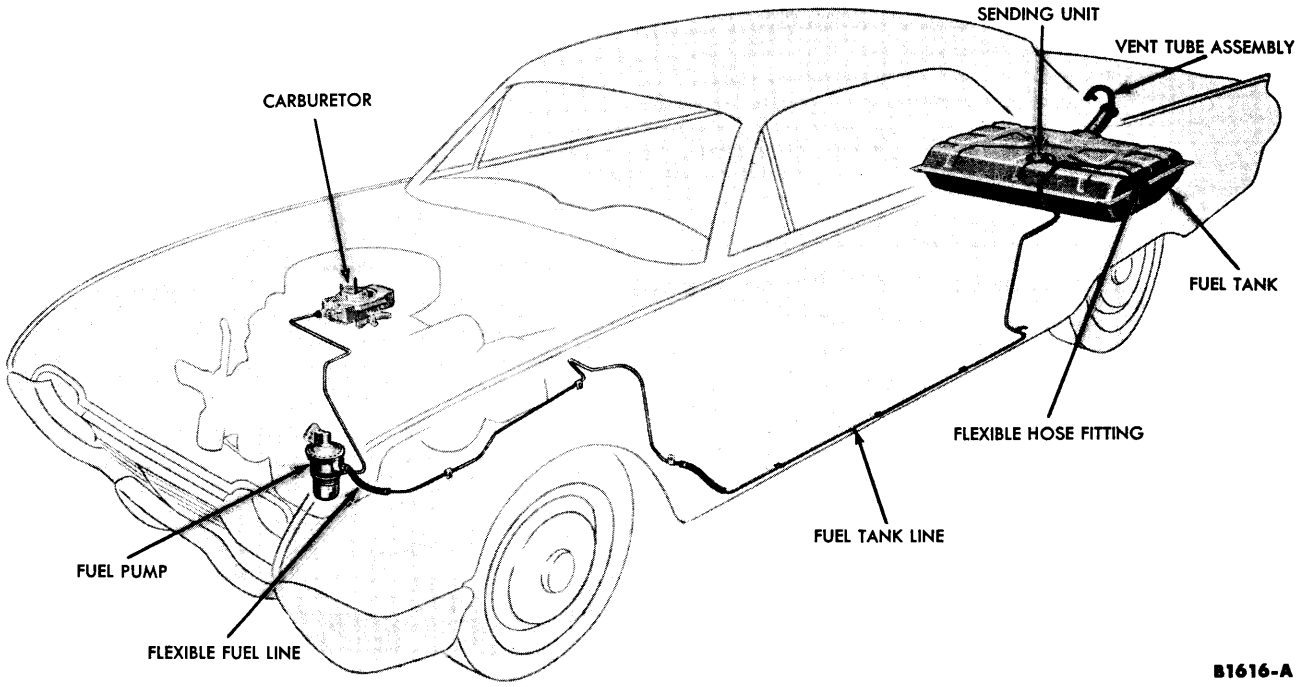

FIG. 1—Fuel System Installation

Pressure Test

1. Disconnect the fuel inlet line from the carburetor.

2. Install a pressure gauge (0-15 psi) with a petcock in the carburetor fuel inlet line (Fig. 2).

3. Install a flexible hose in the petcock so that the fuel can be expelled into a suitable container for the capacity test.

4. Vent the system, by opening the petcock momentarily, before taking a pressure reading.

5. Operate the engine at 500 rpm. After the pressure has stabilized, it should be to specifications.

Capacity Test. Perform this test only when the fuel pump pressure is within specifications.

1. Operate the engine at 500 rpm.

2. Open the petcock and expel the fuel into a suitable container (Fig. 2). Observe the time to expel 1 pint. It should be within specifications.

FIG. 2—Fuel Pump Pressure and Capacity

FUEL PUMP TROUBLE DIAGNOSIS GUIDE

LOW FUEL PUMP PRESSURE	Diaphragm stretched or leaking. Spring weak. Rocker arm worn. Excessive clearance between rocker arm and fuel pump link. Fittings loose or cracked.	Fuel line cracked or broken. Valve improperly seating. Dirt in the fuel tank and/or lines. Fuel tank vent restricted. Diaphragm ruptured.
HIGH FUEL PUMP PRESSURE	Spring too strong or improper spring.	
FUEL PUMP LEAKS FUEL	Main body retaining screws loose. Diaphragm defective. Fittings loose.	Threads on fittings stripped. Body cracked.
FUEL PUMP LEAKS OIL	Pull rod oil seal defective. Fuel pump mounting bolts loose.	Mounting gasket defective.
FUEL PUMP NOISE	Rocker arm worn. Mounting bolts loose.	Rocker arm spring weak or broken.

CARBURETOR

Dirt accumulation in the fuel and air passages, improper idle adjustments, and improper fuel level are the major sources of carburetor troubles.

TESTS

Accelerating Pump Discharge

1. Remove the air cleaner.

2. Open the primary throttle plates.

3. Observe the fuel flow from the accelerating pump discharge nozzles.

If the system is operating satisfactorily, a quick steady stream will flow from the discharge nozzles.

Power Valve

1. Remove the carburetor from

the intake manifold. Invert the carburetor.

2. Remove the glass bowl from the fixture. Fill the bowl half-full of water. Install the bowl on the fixture.

3. Connect a line from a vacuum pump to the fitting on top of the fixture. Insert the large OD end of the wand in the tube and attach the other end of the tube to the fitting on the side of the fixture. Slip the rubber gasket (furnished with the tool) over the small OD end of the wand. Hold this end against the power valve vacuum pickup port (Fig. 3).

4. Look for bubble formations in the water in the bowl. A continuous stream of bubbles indicates leakage through the power valve diaphragm or gasket, or the cover or gasket.

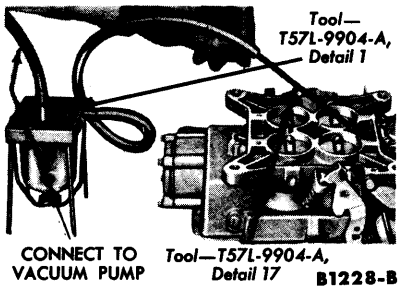

FIG. 3—Power Valve Check

If leakage is encountered, the power valve, power valve gasket, the cover, and cover gasket should be replaced one at a time with a new part and the check repeated until the source of leakage has been found. If the source of leakage can not be found, the gasket seats are damaged and the defective parts should be replaced.

A few bubbles may be noticed immediately upon attaching the vacuum line. The bubbling should stop within approximately 15 seconds or after the air has been removed from the system. If no bubbles are seen, the power valve, gaskets, and cover are sealing properly.

CARBURETOR TROUBLE DIAGNOSIS GUIDE

HARD STARTING (HOT OR COLD)	Improper starting procedure causing a flooded engine. Improper carburetor fuel level. Improper idle adjustments. Sticking or incorrectly seating fuel inlet needle. Incorrect fuel pump pressure. Improper carburetor gasket and spacer combination.	Incorrect setting of choke thermostatic spring housing. Choke linkage or plate binding. Restrictions or air leaks in the choke vacuum and hot air passages. Defective or inoperative choke plate valve.
ROUGH IDLE	In addition to the items listed under "Poor Performance Caused By A Lean Mixture" or "Poor Performance Caused By A Rich Mixture," the following conditions will cause rough idle: Incorrect idle mixture adjustment. Idle compensator malfunction.	Idle adjusting needles grooved, worn, or otherwise damaged. Idle air bleeds restricted. Idle air or fuel passages restricted. Idle discharge holes restricted. Idle discharge holes not in proper relation to the throttle plates.
POOR ACCELERATION	Poor acceleration complaints fall under one of three headings: the engine is sluggish on acceleration, the engine stalls when accelerated, or the engine hesitates or develops a flat spot when accelerated. Poor acceleration is caused by either an excessively lean or rich mixture on acceleration. A lean mixture on acceleration can be caused by: Accelerating pump diaphragm defective. Incorrect pump stroke adjustment. Accelerating pump fuel inlet valve not seating on acceleration. Low fuel level or float setting. Restriction in the accelerating pump discharge passage.	Discharge ball check or weight not coming fully off its seat, or failing to seat properly on the reverse stroke of the pump diaphragm. Air leak between the carburetor, and the manifold caused by loose mounting bolts or defective gasket. Air leak at the throttle shaft caused by worn throttle shaft. Air leak at the accelerating pump cover caused by defective gasket or warped pump cover. A rich mixture on acceleration can be caused by: High fuel level or float setting. Malfunctioning automatic choke. Excessively dirty air cleaner. Incorrect pump stroke adjustment.
FLOODING OR LEAKING CARBURETOR	Cracked main body. Defective main body gasket. High fuel level or float setting. Fuel inlet needle not seating properly or worn needle and/or seat. Ruptured accelerating pump diaphragm. Excessive fuel pump pressure.	

CONTINUED ON NEXT PAGE

CARBURETOR TROUBLE DIAGNOSIS GUIDE (Continued)

POOR PERFORMANCE CAUSED BY A RICH MIXTURE	Excessive dirt in the air cleaner. High fuel level or float setting. Fuel inlet needle not seating properly or worn needle and/or seat. Power valve leaking. Restricted air bleeds. Worn or damaged main metering jet.	Accelerating pump discharge ball check and/or weight not seating properly. Fuel pump pressure excessive. Fuel siphoning from secondary main fuel system.
POOR PERFORMANCE CAUSED BY A LEAN MIXTURE	Low fuel level or float setting. Restriction in main fuel passage.	Sticking fuel inlet needle. Low fuel pump pressure.
SECONDARY SYSTEM NOT CUTTING IN	Defective secondary diaphragm. Air leak where secondary vacuum pick-up tube fits into air horn, between air horn and main body, or between the secondary diaphragm housing cover and housing. Secondary diaphragm return spring too stiff. Secondary throttle plates wedged in barrels.	Bent secondary throttle shaft. Secondary throttle plates operating rod binding, or disconnected from secondary diaphragm or secondary throttle lever. Secondary vacuum passage ball check stuck on its seat. Secondary vacuum probe restricted or not properly positioned.

2 FUEL FILTER MAINTENANCE

REPLACEMENT

The fuel filter is integral with the fuel pump (Fig. 4). The filter contains a replaceable element. Replace the element if it becomes clogged and at the recommended interval (Group 12).

1. Unscrew the filter housing from the fuel pump, and remove the filter element and gasket. Discard the element and gasket. Clean the filter housing in cleaning solvent.

2. Place a new filter element over the spout in the fuel pump (Fig. 4). Coat a new gasket with light engine oil and position the gasket on the filter housing. Screw the filter housing on the pump. Hand tighten the filter housing until the gasket contacts the pump, then advance it ⅛ turn.

3. Start the engine and check for leaks.

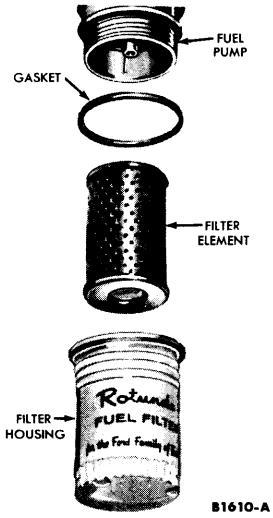

FIG. 4—Fuel Filter Assembly

3 CARBURETOR IN-CHASSIS ADJUSTMENTS

IDLE ADJUSTMENTS

Make the idle adjustments in the sequence listed. **Be sure the hot idle compensator is seated to allow for proper adjustments.**

ENGINE IDLE SPEED

The engine idle speed is adjusted to settings for a hot engine and a cold engine (fast idle speed) during choke operation. **On a car with air conditioner, operate the air conditioner for 20 minutes before setting the engine idle speed. Adjust the engine idle speed with the air conditioner operating.**

1. Operate the engine for 30 minutes at 1200 rpm. Be sure the choke

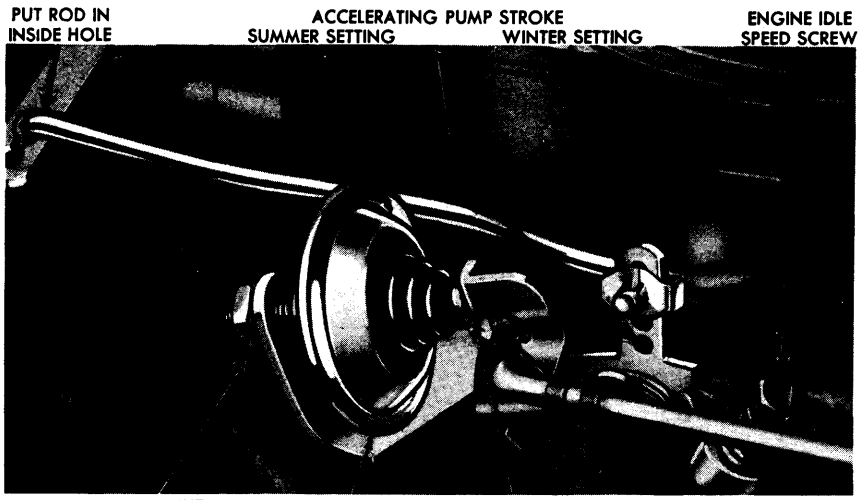

FIG. 5—Idle Adjustments

fast idle cam is in the slow position (idle adjustment screw not contacting the fast idle cam).

2. Attach a tachometer to the engine. Set the parking brake. Place the transmission selector lever in drive range. Check the engine idle speed. Adjust the engine idle speed to drive range specifications by turning the screw in to increase the speed or by turning the screw out to decrease the speed (Fig. 5).

3. After the correct engine idle speed has been obtained, open the throttle by hand and allow it to close normally. Check the engine idle speed.

4. The adjusting screw on the right side of the carburetor contacts one edge of the fast idle cam (Fig. 6). The cam permits a faster engine idle speed for smoother running when the engine is cold during choke operation. As the choke plate is moved through its range of travel from the closed to the open position, the fast idle cam pick-up lever rotates the fast idle cam. Each position on the fast idle cam permits a slower idle rpm as engine temperature rises and choking is reduced.

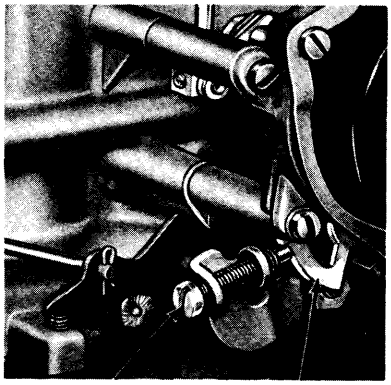

FIG. 6—Fast Engine Idle Speed Adjustment

Align the fast idle cam with the fast idle screw as shown in Fig. 6. Then, turn the screw in to obtain the specified rpm.

Remove the tachometer if the idle fuel mixture is not going to be adjusted. If the idle fuel mixture is to be adjusted, leave the tachometer installed so that the idle speed can be checked after the idle fuel mixture has been adjusted.

IDLE FUEL MIXTURE

The idle fuel mixture is controlled by the idle mixture adjusting needles (Fig. 7).

1. Adjust the engine idle speed.

2. Make the initial mixture adjustment by turning the needles in until they lightly touch their seats, then back them out 1-1½ turns. Turn the idle mixture needles in until the engine begins to run rough from the lean mixture. **Do not turn a needle against the seat tight enough to groove the point. If a needle is damaged, it must be replaced before a proper mixture adjustment can be obtained.** Turn the needles out until the engine begins to "roll" from the rich mixture. Then, turn the needles in until the engine runs smoothly. The needles should be turned about the same amount. Final setting may vary about ½-turn difference between the needles. Always favor a slightly rich mixture rather than a lean mixture.

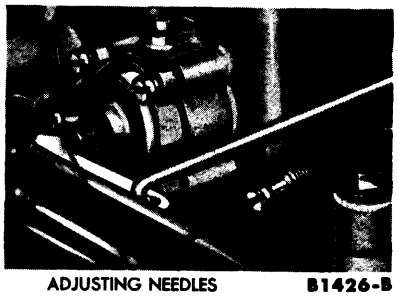

FIG. 7—Idle Fuel Mixture Adjustment

3. Check the engine idle speed and adjust it if necessary.

ANTI-STALL DASHPOT

1. With the engine idle speed and idle mixture properly adjusted, and the engine at normal operating temperature, loosen the anti-stall dashpot lock nut (Fig. 5).

2. Hold the throttle in the closed position and depress the plunger with a screw driver blade. Check the clearance between the throttle lever and the plunger tip with a feeler gauge of the proper thickness. Turn the anti-stall dashpot in its bracket in a direction to provide the specified clearance between the tip of the plunger and the throttle lever. Tighten the lock nut to secure the adjustment.

ACCELERATING PUMP STROKE

The over-travel lever has 4 holes and the accelerating pump link has 2 holes to control the accelerating pump stroke for different engine applications (Fig. 5). Install the accelerating pump operating rod in the No. 3 hole for winter operation or in the No. 1 hole for normal summer operation in the over-travel lever. Install the accelerating pump operating rod in the inside hole in the accelerating pump link for all climatic conditions. **The accelerating pump operating rod may be installed in the No. 2 hole in the over-travel lever to suit operating or intermediate climatic conditions.**

AUTOMATIC CHOKE

1. Loosen the thermostatic spring housing retaining screws and turn the housing ¼ – turn counterclockwise from the index mark in the rich direction (Fig. 8).

2. Move the choke plate toward the open position by pressing on the lower portion of the choke plate until

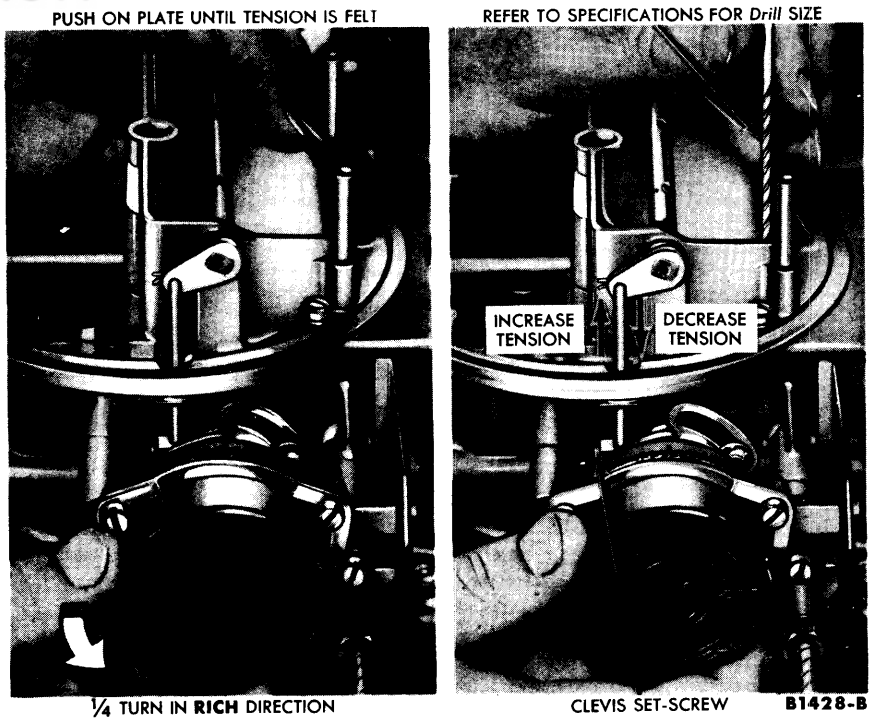

FIG. 8—Choke Plate Clearance

resistance to movement is felt. At this point, the clearance between the front edge of the choke plate and the inside surface of the air horn should be within specifications. **Do not force the choke plate, or the tang on the lever in the choke housing will bend.** Check the clearance by placing the proper size drill between the front edge of the choke plate and the air horn (Fig. 8).

3. If the choke plate clearance is not within specifications, loosen the clevis set screw, using a 1/16-inch Allen wrench. Position the proper size drill between the front edge of the choke plate and air horn (Fig. 8). Hold the choke plate against the drill and move the choke plate rod up or down until the specified clearance is obtained. Tighten the set screw on the clevis to secure the adjustment.

4. Set the thermostatic spring housing to the proper index mark.

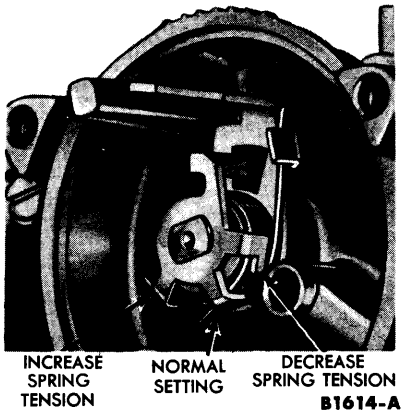

FIG. 9—Torsion Spring Adjustment

The setting may vary 2 notches in either direction to suit operating conditions.

5. After a cold start in low ambient temperatures, if the engine hesitates or stumbles (caused by a lean mixture) or if the engine runs rough (caused by a rich mixture), change the torsion spring tension (Fig. 9).

Decrease the spring tension to correct for richness. Increase the spring tension to correct for leanness.

To change the spring tension, remove the thermostat spring housing. Place the short tang of the spring in the left prong to increase tension or in the right prong to decrease tension (Fig. 9). The normal position of the spring is in the center prong.

FLOAT SETTING

Refer to "Bench Adjustments" in Part 3-2.

4 AIR CLEANER

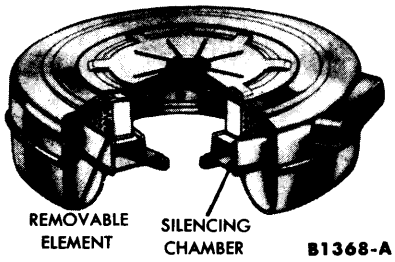

FIG. 10—Air Cleaner

The engine is equipped with a dry-type air cleaner that has a replaceable cellulose fiber filtering element (Fig. 10). The air from the engine compartment enters the air cleaner through the opening on the side and passes through a silencing chamber and then through the filter element. After leaving the filter element, the air is deflected down into the carburetor. The dust particles are trapped in the filter element as the air rushes through it.

MAINTENANCE

Refer to Group 12 for the recommended maintenance mileage interval.

Direct clean compressed air against the element in the opposite direction of normal air flow, that is, from the inside of the element out. When the element is cleaned or replaced, clean the air cleaner body and cover in cleaning solvent, then wipe them dry.

REMOVAL

1. Remove the wing nut retaining the air cleaner on the carburetor, then lift the air cleaner off the carburetor.

2. Remove the cover and lift the element out of the air cleaner body.

INSTALLATION

1. Place the air cleaner body on the carburetor so that the word "FRONT" faces the front of the car.

2. Place the element in the air cleaner body. Install the cover.

PART 3-2 CARBURETOR

Section		Page
1	Carburetor Operation	3-8
2	Carburetor Removal and Installation	3-12
3	Carburetor Disassembly, Cleaning and Inspection, and Assembly	3-12

1 CARBURETOR OPERATION

The Ford 4-barrel carburetor (Figs. 1, 2, and 3) has two main assemblies; the air horn, and the main body.

The air horn assembly, which serves as the main body cover, contains the choke plate, the hot idle compensator, the vents for the fuel bowls, and the secondary throttle control vacuum tube.

The primary and secondary throttle plates, the accelerating pump assembly, the power valve assembly, the secondary operating diaphragm assembly, and the fuel bowls are in the main body. The automatic choke housing is attached to the main body.

The two primary (front) barrels each contain a main and booster venturi, main fuel discharge, accelerating pump discharge, idle fuel discharge, and a primary throttle plate.

The two secondary (rear) barrels each have a main and booster venturi, idle fuel discharge, secondary main fuel discharge, and a vacuum operated throttle plate.

FUEL INLET SYSTEM

A separate fuel bowl is provided for the primary and secondary stages (Fig. 4). The fuel first enters the primary fuel bowl through the fuel inlet. A drilled passage through the right side of the main body connects the fuel bowls. The pressure in the two fuel bowls is balanced by means of a pressure equalizing chamber built into the left side of the main body.

The amount of fuel entering the fuel bowl is regulated by the distance the fuel inlet needle is raised off its seat and by fuel pump pressure. Movement of the fuel inlet needle in relation to the seat is controlled by the float and lever assembly which rises and falls with the fuel level. When the fuel in the fuel bowl reaches a pre-set level, the float lowers the fuel inlet needle to a position where it restricts the flow of fuel, admitting only enough fuel to replace that being used.

A retracting clip is attached to the fuel inlet needle and hooks over the tab of the float assembly. This clip assures reaction of the fuel inlet needle to any movement of the float.

The primary fuel bowl is vented externally at all times. In addition, both the primary and secondary fuel bowls are internally vented into the air cleaner.

An anti-splash washer is located on top of each fuel inlet needle.

AUTOMATIC CHOKE SYSTEM

The choke plate, located in the air horn above the primary barrels, when closed, provides a high vacuum above as well as below the throttle plates. With a vacuum above the throttle plates, fuel will flow from the main fuel system as well as from the idle fuel system. This provides the extremely rich fuel mixture necessary for cold engine operation.

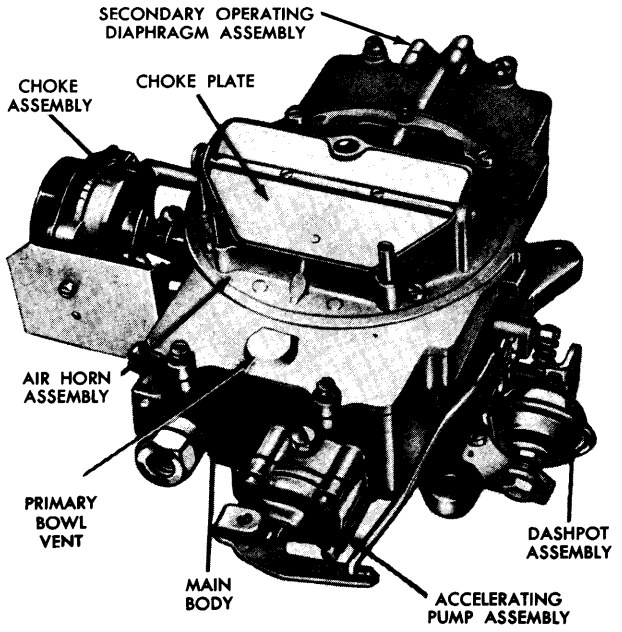

B1236-C

FIG. 1—Ford 4-Barrel Carburetor—¾ Front View

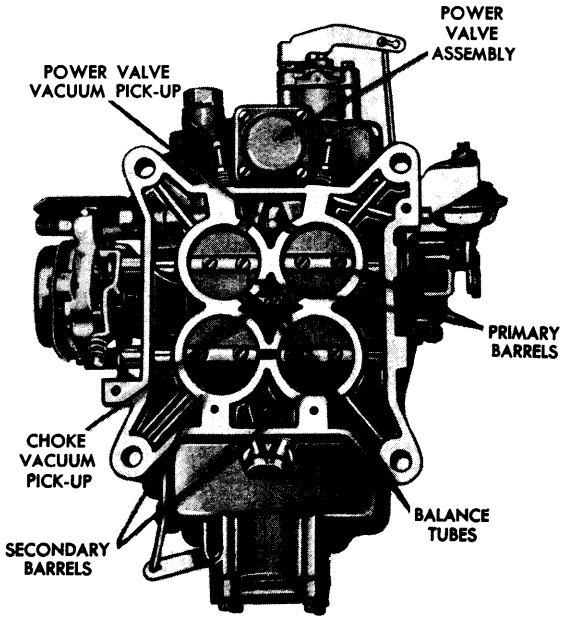

B1237-B

FIG. 2—Ford 4-Barrel Carburetor—Bottom View

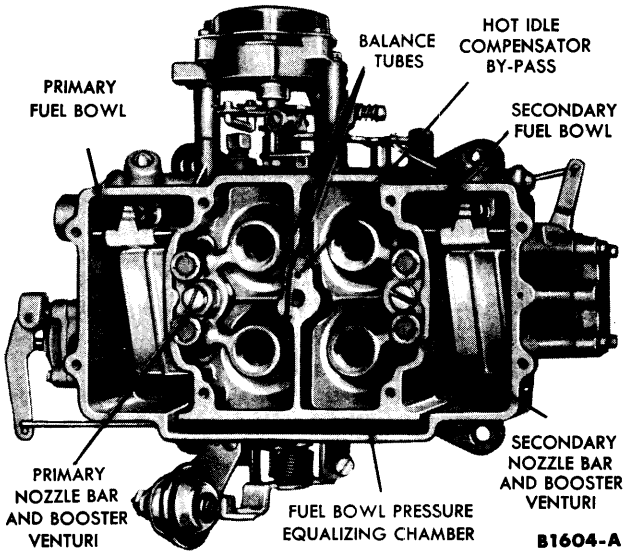

FIG. 3—Ford 4-Barrel Carburetor—Top View

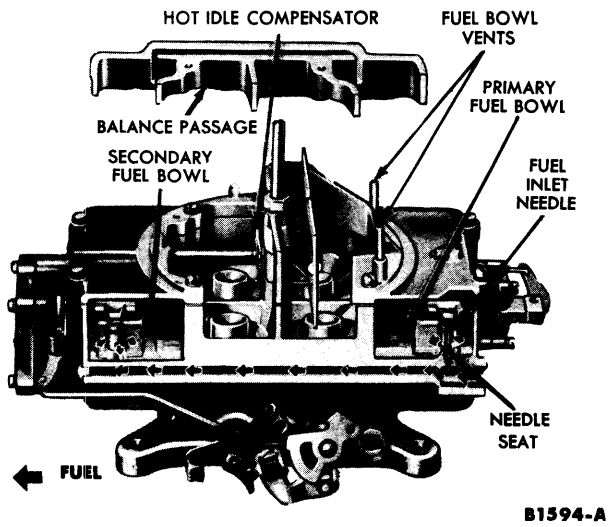

FIG. 4—Fuel Inlet System

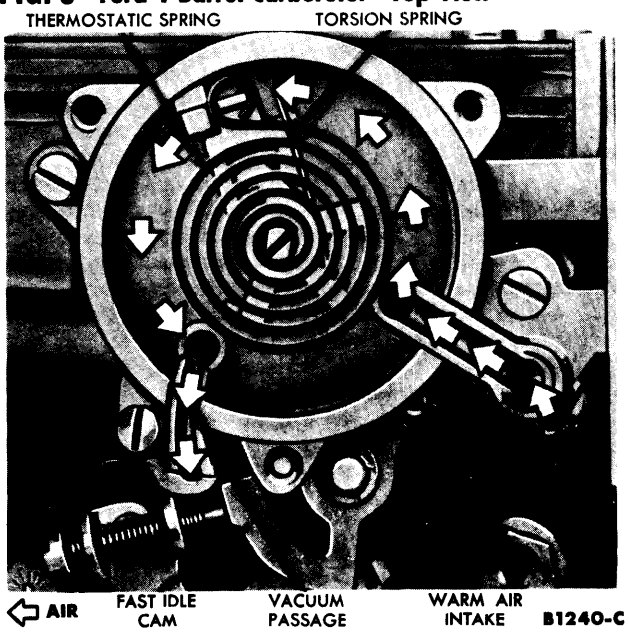

FIG. 5—Automatic Choke System

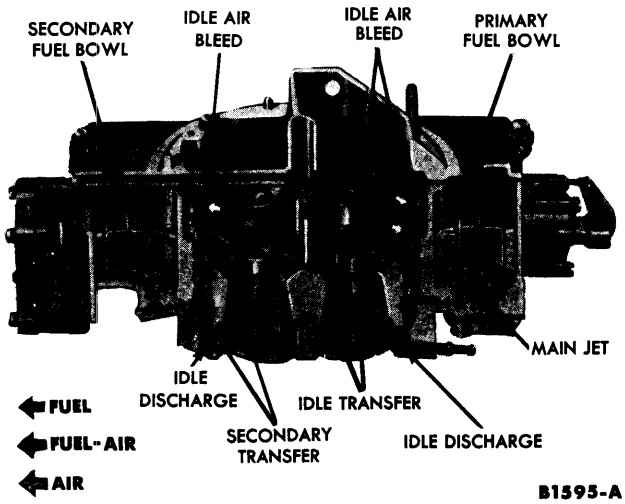

FIG. 6—Idle Fuel System

The carburetor choke shaft is linked to a thermostatic choke control mechanism mounted on the main body (Fig. 5).

The bi-metal thermostatic spring mechanism unwinds when cold and winds up when warm. When the engine is cold, the thermostatic spring, through attaching linkage, holds the choke plate in a closed position. When the engine is started, enough air is drawn around the choke plate to enable the engine to operate and prevent flooding.

As the engine continues to operate, manifold vacuum, channeled through a passage on the bottom of the main body to the choke housing, draws heated air from the exhaust manifold heat chamber. The amount of air entering the choke housing is controlled by restrictions in the air passages in the carburetor.

The warmed air enters the choke housing and heats the thermostatic spring causing it to wind up. The tension of the thermostatic spring gradually decreases as the temperature of the air from the heat chamber rises, allowing the choke plate to open. The air is exhausted into the intake manifold.

When the engine reaches its normal operating temperature, the spring no longer exerts an opposing tension on the choke plate. The air velocity acting on the offset choke plate, as well as manifold vacuum acting below the choke plate, forces it to the full open position.

The fast idle cam pick-up rod actuates the fast idle cam during choking. One edge of the fast idle cam contacts the fast idle adjusting screw which permits a faster engine idle speed for smoother running when the engine is cold. As the choke plate is moved through its range of travel

from the closed to the open position, the pick-up lever rotates the fast idle cam. Each position on the fast idle cam permits a slower idle rpm as engine temperature rises and choking is reduced.

During the warm-up period, if the engine should reach the stall point due to a lean mixture, manifold vacuum will drop considerably. The tension of the torsion spring then overcomes the lowered vacuum and air velocity acting on the choke plate. The choke plate will be moved toward the closed position, providing a richer mixture to help prevent stalling.

The linkage between the choke lever and the throttle shaft is designed so that the choke plate will partially open when the accelerator pedal is fully depressed. This permits unloading of a flooded engine.

IDLE FUEL SYSTEM

The difference in pressure between the fuel bowls and the idle discharge ports force fuel through the primary and secondary stage idle fuel systems.

PRIMARY STAGE

Fuel flows from the primary stage fuel bowl through the main jet and into the bottom of the main well (Fig. 6).

From the main well, the fuel flows up through the idle tube and through a short diagonal passage in the booster venturi assembly into the idle passage in the main body. A calibrated restriction, at the upper tip of the idle tube, meters the flow of fuel.

Air enters the idle system from the air bleed which is located directly above the idle tube. The air bleed also acts as a vent to prevent siphoning at off-idle or high speeds and when the engine is stopped. Additional air is bled into the system through an air bleed located at the bottom of the diagonal passage in the booster venturi where the fuel enters the idle passage in the main body.

Fuel flows down the idle passage in the main body past two idle transfer holes. The idle transfer holes act as additional air bleeds at curb idle. The fuel then flows past the pointed tip of the adjusting needle which controls the idle fuel discharge in the primary stage. From the adjusting needle chamber, the fuel flows through a short horizontal passage and is discharged below the primary throttle plates.

During off-idle when the primary throttle plate is moved slightly past the idle transfer holes, each hole begins discharging fuel as it is exposed to manifold vacuum. As the primary throttle plate is opened still wider and engine speed increases, the air flow through the carburetor is also increased. This creates a vacuum in the booster venturi strong enough to bring the primary stage main fuel system into operation. Fuel flow from the primary idle fuel system begins tapering off as the main fuel system begins discharging fuel.

A thermostatically controlled hot idle compensator is located on the air horn above the secondary booster venturis. At carburetor high inlet air temperatures, the hot idle compensator will open and allow air to bypass the throttle plates through a passage in the air horn and main body and enter the intake manifold. This improves idle stability and minimizes the effect of fuel vaporization which results in excessively rich idle mixtures.

SECONDARY STAGE

Fuel flows from the secondary stage fuel bowl through the main jet and into the bottom of the main well (Fig. 6).

From the main well, the fuel flows up through the idle tube and through a short diagonal passage in the booster venturi assembly and then into the idle passage in the main body. A calibrated restriction, at the upper tip of the tube, meters the flow of fuel.

Fuel flows down the idle passage in the main body past two transfer holes above the closed throttle plate and flows through a metered restriction into a short horizontal passage and is discharged into the secondary barrel below the closed throttle plate. The transfer holes act as air bleeds at idle. The secondary idle fuel system continues discharging fuel until the secondary main fuel system comes into operation.

Air is introduced into the secondary stage idle fuel system from the

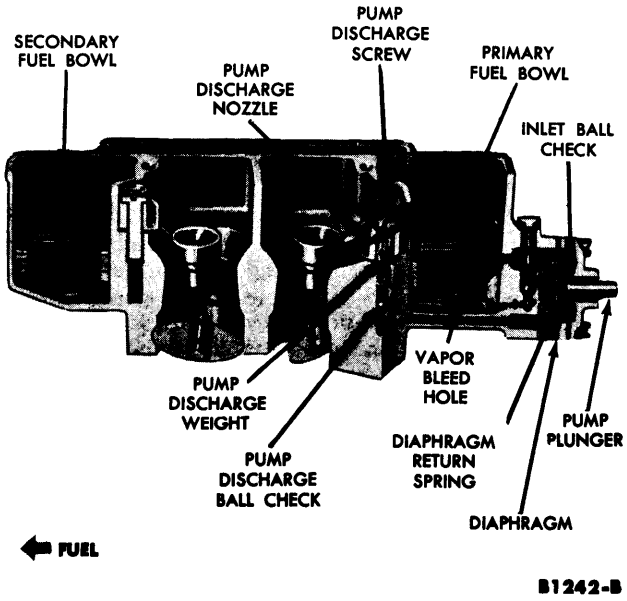

FIG. 7—Accelerating System

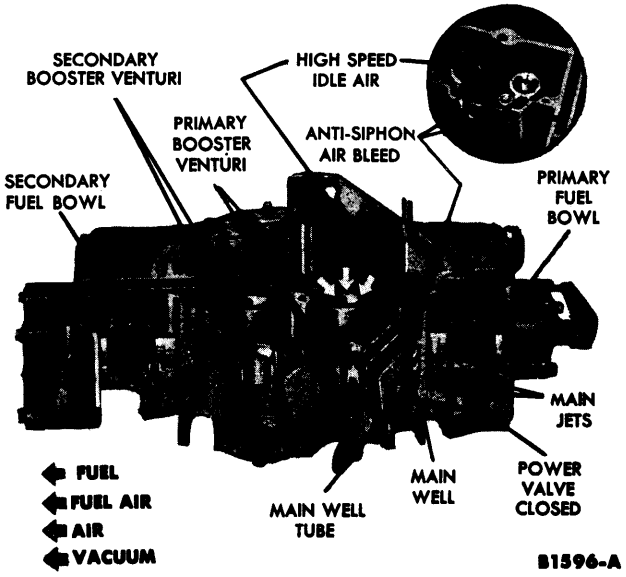

FIG. 8—Primary Stage Main Fuel System

idle air bleed which is located directly above the idle tube. The air bleed also acts as a vent to prevent siphoning in the idle fuel system at high speeds and when the engine is stopped.

ACCELERATING SYSTEM

Upon acceleration, the air flow through the carbuertor responds almost immediately to the increased throttle opening. There is, however, a brief interval before the fuel, which is heavier than air, can gain speed and maintain the desired balance of fuel and air. During this interval, the accelerating system (Fig. 7) supplies fuel until the other systems can once again provide the proper mixture.

When the throttle is closed, the diaphragm return spring forces the diaphragm toward the cover, drawing fuel into the chamber through the inlet. The inlet has a ball check which opens to admit fuel from the primary fuel bowl and closes when the accelerating pump is operated to prevent a reverse flow. A discharge weight and ball check prevents air from entering when fuel is drawn into the chamber.

When the throttle is opened, the diaphragm rod is forced inward, forcing fuel from the chamber into the discharge passage. Fuel under pressure forces the pump discharge weight and ball off their seat and fuel passes through the accelerating pump discharge screw and is sprayed into each primary booster venturi through discharge ports.

An air bleed in the wall of the accelerating pump fuel chamber prevents siphoning of fuel when the accelerating pump is not operating.

PRIMARY STAGE MAIN FUEL SYSTEM

As engine speed increases, the air passing through the booster venturi creates a vacuum. The amount of vacuum is determined by the air flow through the venturi, which in turn is regulated by the speed of the engine. The difference in pressure between the main discharge port and the fuel bowl causes fuel to flow through the main fuel system (Fig. 8).

At a predetermined venturi vacuum, fuel flows from the primary fuel bowl, through the main jets, and into the bottom of the main well. The fuel moves up the main well tube past air bleed holes. Filtered air from the high speed air bleed enters the fuel flow in the main well tube through holes in the side of the tube. The high speed air bleed meters an increasing amount of air to the fuel as venturi vacuum increases, maintaining the required fuel-air ratio. The mixture of fuel and air is lighter than raw fuel and responds faster to changes in venturi vacuum. It also vaporizes more readily than raw fuel. The fuel and air continue up the main well tube past another air bleed which also acts as a vent to prevent siphoning when the engine is shut down. The fuel is discharged into the booster venturi where it is vaporized and mixed with the air flowing through the carburetor.

The throttle plate controls the amount of the fuel-air mixture admitted to the intake manifold, regulating the speed and power output of the engine.

A balance tube is located in each primary barrel directly below the booster venturi. When decelerating, the balance tube siphons off any excess fuel droplets remaining around the edge of the booster venturi and discharges the droplets into the equalizing slots in the base of the carburetor where they are mixed with the idle fuel. The balance tube also acts as an additional air bleed during the idle fuel system operation.

POWER FUEL SYSTEM

During periods of increased road loads or high speed operation, the fuel-air ratio must be increased for added power. The added fuel required during this period is supplied by the power fuel system (Fig. 9).

The power fuel system is controlled by manifold vacuum.

Manifold vacuum is transmitted from an opening in the base of the main body, through a passage in the main body and power valve chamber to the power valve diaphragm. The manifold vacuum, acting on the power valve at idle speed or normal road load conditions, is great enough to hold the power valve diaphragm down, overcoming the tension of the spring on the valve stem and holding the valve closed. When high power operation places a greater load on the engine and manifold vacuum drops below a predetermined value, the

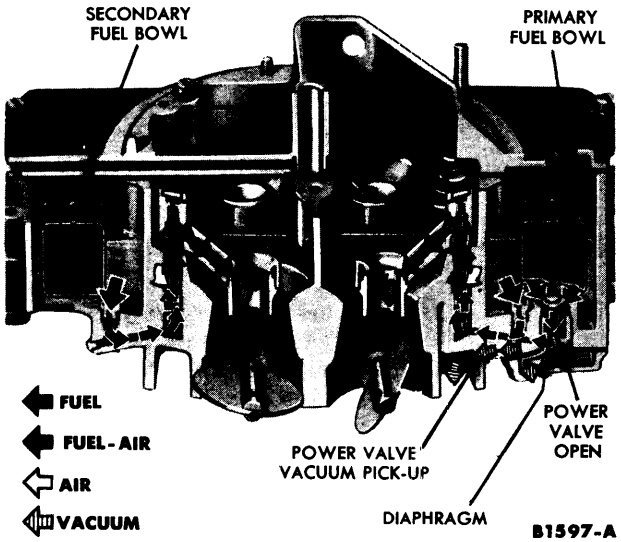

FIG. 9—Power Fuel System

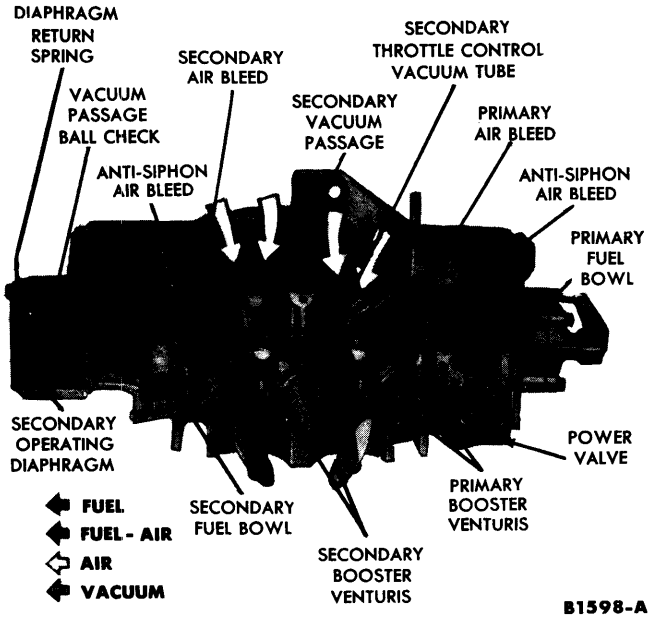

FIG. 10—Secondary Stage Main Fuel System

spring opens the power valve. Fuel from the primary fuel bowl flows through the power valve and into passages leading to both primary stage main fuel wells. Here the fuel is added to the fuel from the primary stage main fuel system, enriching the mixture.

As engine power demands are reduced, manifold vacuum increases. The increased vacuum overcomes the tension of the valve stem spring and closes the power valve.

SECONDARY THROTTLE OPERATION AND MAIN FUEL SYSTEM

To provide sufficient fuel-air mixture to operate the engine at maximum power, the mixture supplied by the primary stage is supplemented by an additional quantity of fuel-air mixture from the secondary stage (Fig. 10).

This additional supply of fuel-air mixture is delivered through the two secondary (rear) barrels of the carburetor. The secondary stage throttle plates are operated by a spring-loaded vacuum diaphragm assembly attached to the main body and linked to the secondary throttle shaft.

Opening of the secondary throttle plates is controlled by vacuum from the left primary booster venturi. The vacuum is transmitted from the secondary throttle control vacuum tube through passages in the air horn, main body, and behind the secondary operating diaphragm.

As the primary throttle plates are opened, primary venturi vacuum increases. When the vacuum reaches a predetermined amount, it starts to act on the secondary stage operating diaphragm, which in turn starts to open the secondary throttle plates.

A ball check, located in the vacuum passage in the diaphragm housing, controls the rate at which the secondary throttle plates are allowed to open. Any rapid increase in vacuum which would tend to open the secondary throttle plates too suddenly, holds the ball check against its seat. The opening of the secondary throttle plates is slowed to a rate governed by the amount of vacuum passing through a bleed in the ball seat.

As the secondary throttle plates begin to open, fuel flows from the secondary fuel bowl through the secondary main jets into the bottom of the main well and up the main well tube past air bleed holes. Air is introduced through an air bleed at the top of the tube. When the secondary throttle plates are moved slightly past the secondary transfer holes, each hole begins discharging fuel as it is exposed to manifold vacuum. As secondary venturi vacuum is increased, the fuel is discharged into the secondary booster venturi. Fuel from the transfer holes tapers off and the holes act as additional air bleeds.

When decelerating, vacuum in the primary venturi decreases, and the secondary throttle plates begin to close. The ball check in the diaphragm housing passage will unseat when the throttle is closed quickly, allowing the low pressure on the vacuum side of the diaphragm to rapidly return to atmospheric pressure. As the vacuum acting on the diaphragm is lessened, the load on the diaphragm spring will start closing the secondary plates.

2 CARBURETOR REMOVAL AND INSTALLATION

REMOVAL

1. Remove the air cleaner. Remove the throttle rod from the throttle lever. Disconnect the distributor vacuum line, the fuel inlet line, and the choke heat tube at the carburetor.
2. Remove the carburetor retaining nuts and lock washers, then remove the carburetor. Remove the spacer and two gaskets from the manifold.
3. If the carburetor is to be overhauled, install bolts about 2¼ inches long of the correct diameter through the carburetor retaining stud holes with a nut above and below the flange (or install carburetor legs). This will facilitate working on the carburetor and prevent damage to the throttle plates.

INSTALLATION

1. Clean the gasket surface of the intake manifold, spacer, and carburetor. Place the spacer between two new gaskets and position them on the manifold. Position the carburetor on the spacer, and secure it with the lock washers and nuts.
2. Connect the throttle rod, the choke heat tube, and the distributor vacuum line. Refer to "Carburetor In-Chassis Adjustments" in Part 3-1 and adjust the engine idle speed, the idle fuel mixture, and the anti-stall dashpot. Install the air cleaner.

3 CARBURETOR DISASSEMBLY, CLEANING, INSPECTION, AND ASSEMBLY

DISASSEMBLY

Use a separate container for the component parts of the various assemblies to facilitate cleaning, inspection, and assembly.

For a complete carburetor overhaul, follow all the steps. To partially overhaul the carburetor or to install a new gasket kit, follow only the applicable steps.

AIR HORN

1. Remove the air cleaner anchor screw and lock washer.
2. Remove the choke plate rod hairpin retainer. Using a 1/16-inch Allen wrench, loosen the choke plate rod clevis set screw.
3. Remove the air horn retaining screws and lock washers. Remove the air horn and the choke plate rod. Remove the air horn gasket.
4. Remove the choke plate rod from the choke plate lever. Slide the felt seal and two washers out of the choke rod seal retainer.

If it is necessary to remove the choke plate, remove the secondary throttle control vacuum tube by prying it out with needle nose pliers. Discard the tube after removal. Remove the choke plate screws. Remove the choke plate by sliding it

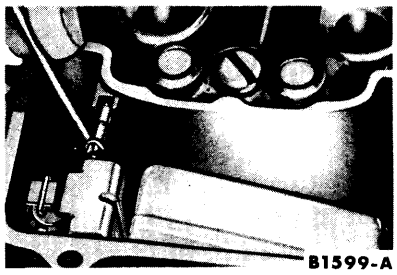

FIG. 11—Float Shaft Retainer Removal

out of the shaft from the bottom of the air horn, then slide the choke shaft out of the air horn.

6. If it is necessary to replace the hot idle compensator, remove the staking marks on the retaining screws and remove the hot idle compensator.

MAIN BODY

1. Using a hook, disconnect the float shaft retainer from each float (Fig. 11). Remove the float and shaft, and the fuel inlet needle, anti-splash washer, and clip from each fuel bowl.

2. Using a jet wrench, remove the fuel inlet needle seat from each fuel bowl and the primary stage and secondary stage main jets.

3. Remove the primary stage booster venturi assembly and gasket. Invert the main body and let the accelerating pump discharge weight and ball fall into the hand. Remove the fuel inlet fitting, gasket, and screen.

4. Remove the secondary stage booster venturi assembly and gasket.

5. Remove the accelerating pump operating rod retainer, then remove the rod. Remove the accelerating pump cover, diaphragm assembly, and spring. Remove the inlet ball check retainer screw and gasket. Invert the main body and let the accelerating pump inlet ball check fall into the hand.

6. Remove the secondary diaphragm operating rod. Remove the diaphragm cover, return spring, and diaphragm. The secondary ball check is not removable.

7. Invert the main body and remove the power valve cover and gasket. Using a box wrench, remove the power valve and gasket. Remove the idle fuel adjusting needles and springs.

8. Remove the choke shield. Remove the fast idle cam retainer. Remove the thermostatic spring housing clamp, and gasket.

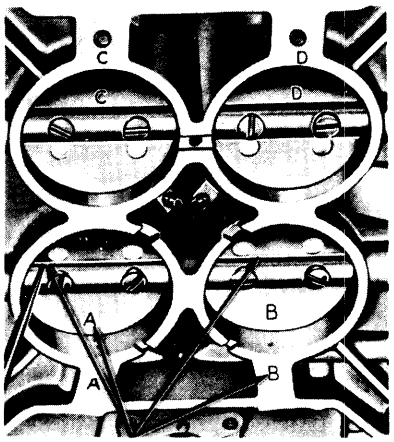

FIG. 12—Throttle Plate Removal

9. Remove the choke housing and gasket.

10. Remove the choke housing lever retaining nut, spacer, and lever. Loosen the screw on the bellcrank clamp and slide the bellcrank off the choke housing shaft.

11. Remove the fast idle cam pick-up rod from the fast idle cam and bellcrank lever.

12. Remove the retainer from the choke housing shaft and slide the shaft assembly out of the choke housing. Remove the spacer, lever, and torsion spring from the shaft.

13. Remove the nut and washer securing the fast idle adjusting lever assembly to the primary throttle shaft and remove the lever assembly.

14. Remove the distributor vacuum line fitting, the anti-stall dashpot if so equipped, and the hot engine idle adjusting screw and spring.

15. If it is necessary to remove the throttle plate, lightly scribe the primary and secondary throttle plates along the throttle shafts and mark each plate and its corresponding bore with a number or letter for proper installation (Fig. 12).

16. Slide the primary and secondary throttle shafts out of the main body.

17. Remove the accelerating pump over-travel lever retainer and slide the spring and lever off the primary throttle shaft.

CLEANING AND INSPECTION

The cleaning and inspection of only those parts not included in the carburetor overhaul repair kit are covered here. All gaskets and parts included in the repair kit should be installed when the carburetor is assembled and the old gaskets and parts should be discarded.

Wash all the carburetor parts (except the accelerating pump diaphragm, the power valve or power valve diaphragm, the secondary operating diaphragm, and the anti-stall dashpot assembly) in clean commercial carburetor cleaning solvent. If a commercial solvent is not available, lacquer thinner or denatured alcohol may be used.

Rinse the parts in kerosene to remove all traces of the cleaning solvent, then dry them with compressed air. Wipe all parts that can not be immersed in solvent with a clean, soft, dry cloth. Be sure all dirt, gum, carbon, and other foreign matter are removed from all parts.

Force compressed air through all passages of the carburetor. **Do not use a wire brush to clean any parts or a drill or wire to clean out any openings or passages in the carburetor.** A drill or wire may enlarge the hole or passage, changing the calibration of the carburetor.

Check the choke shaft for grooves, wear, and excessive looseness or binding. Inspect the choke plate for nicked edges and for ease of operation and free it if necessary.

Check the throttle shafts in their bores for excessive looseness or binding and check the throttle plates for burrs which prevent proper closure.

Inspect the main body, air horn, nozzle bars and booster venturi assemblies, choke housing and thermostatic spring housing, power valve cover, accelerating pump cover, secondary operating diaphragm cover and the main body for cracks.

Check the floats for leaks by holding them under water that has been heated to just below the boiling point. Bubbles will appear if there is a leak. If a float leaks, replace it. Replace the float if the arm needle contact surface is grooved. If the floats are serviceable, polish the needle contact surface of the arm. Replace the float shafts if they are worn.

Replace all screws and nuts that have stripped threads. Replace all distorted or broken springs.

Inspect all gasket mating surfaces for nicks and burrs. Repair or replace any parts that have a damaged gasket surface.

Inspect the idle tubes in each nozzle bar assembly. If they are

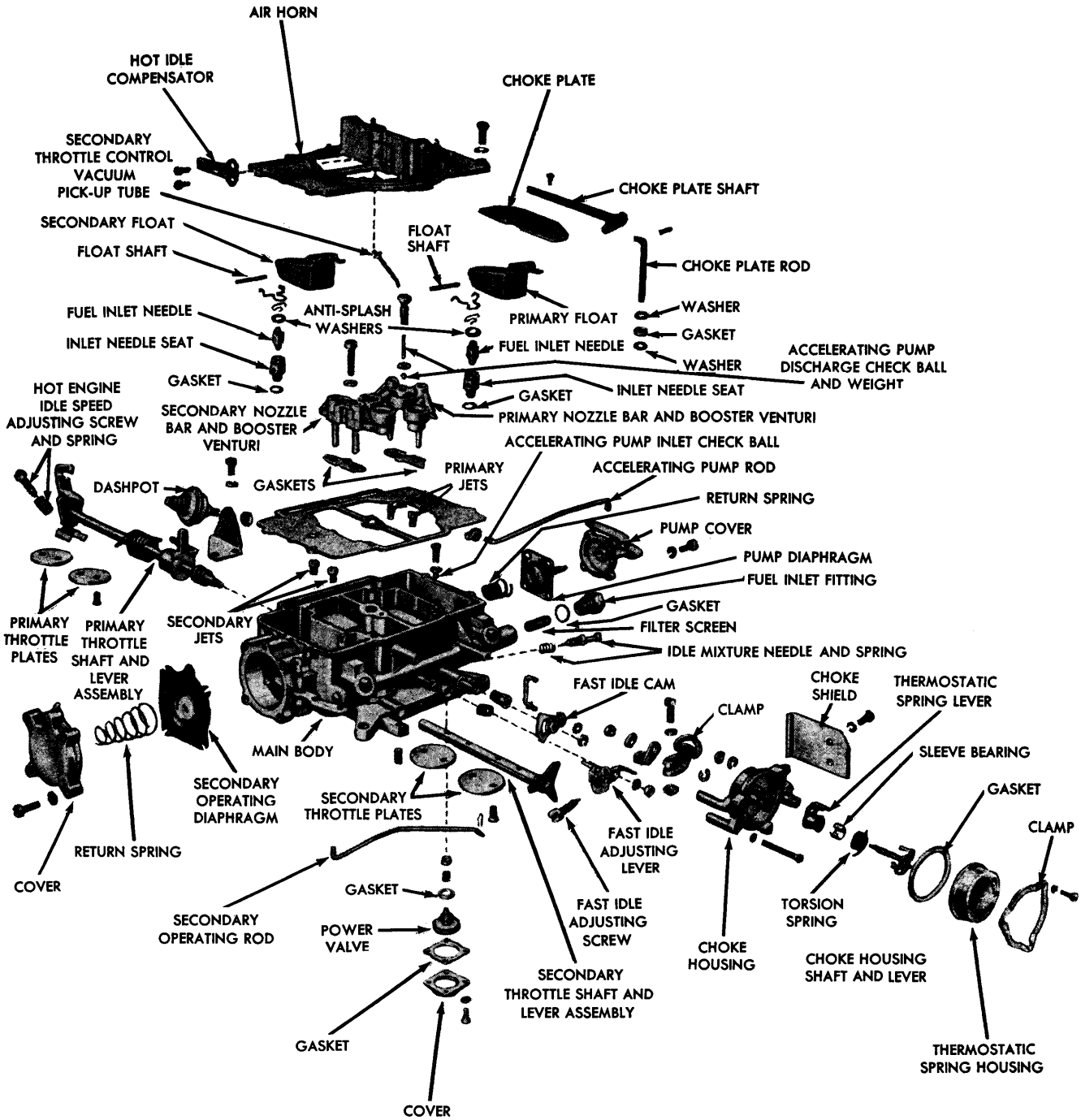

FIG. 13—Ford 4-Barrel Carburetor Assembly

plugged, bent, or broken, replace the booster venturi and nozzle bar assembly.

Inspect the rubber boot of the anti-stall dashpot for proper installation in the groove of the stem bushing. Check the stem movement for smooth operation. Do not lubricate the stem. Replace the assembly if it is defective.

ASSEMBLY

Make sure all holes in the new gaskets have been properly punched and that no foreign material has adhered to the gaskets. Make sure the accelerating pump diaphragm and secondary operating diaphragm are not torn or cut. The carburetor assembly is shown in Fig. 13.

AIR HORN

Refer to Fig. 14 for the correct location of the parts.

1. If the choke plate was removed, position the choke plate shaft in the air horn. Place the choke plate rod seal between the two brass washers and slide them in position on the seal retainer. Slide the choke plate rod through the opening in the air horn assembly and position it in the choke shaft lever. Install the rod retainer.

2. Slide the choke plate in the shaft through the bottom of the air horn. Close the choke plate and position it in the shaft, then install the screws. Tighten and stake the screws.

3. Start a new secondary throttle control vacuum tube into the air horn so that the pick-up end of the tube is perpendicular (or as near as possible) to the mounting surface of the air horn. Drive the tube into the air horn by grasping it lightly below the shoulder with pliers and striking the pliers with a hammer. Drive the tube in until it stops against its shoulder. **Do not crush or bend the tube.**

4. If the hot idle compensator was removed, install the new compensator and stake the retaining screws.

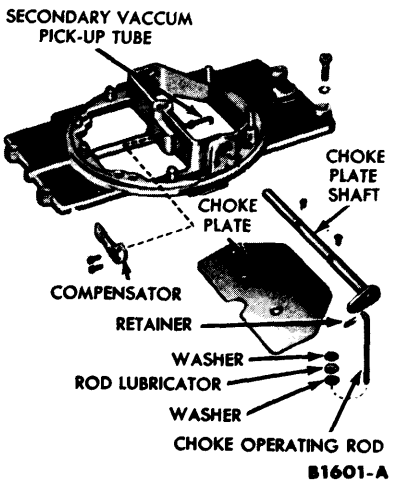

FIG. 14—Air Horn Assembly

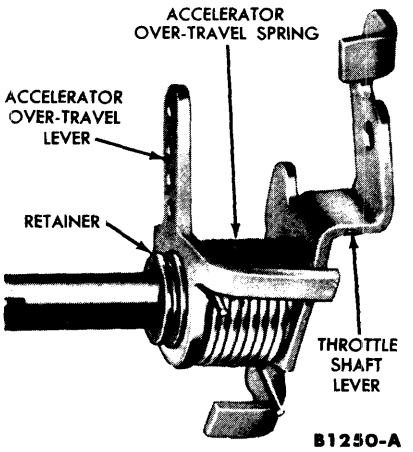

FIG. 15—Accelerator Over-Travel Spring & Lever Installation

MAIN BODY

1. If the throttle plates were removed, place the accelerator over-travel spring, with the shortest tang end first, over the boss on the over-travel lever. Place the short tang of the spring under the lug on the lever. Slide the over-travel lever and spring assembly on the throttle shaft. Hook the longest tang of the spring over the closed throttle lug of the throttle lever (Fig. 15). Install the over-travel lever retainer. Slide the primary throttle shaft assembly into the main body.

Referring to the lines scribed on the throttle plates, install the primary throttle plates in their proper location with the screws snug, but not tight. Invert the main body and hold it up to the light. Little or no light should show between the throttle plates and the throttle bores. Tap the plates lightly with a screwdriver handle to seat them. Tighten and stake the screws.

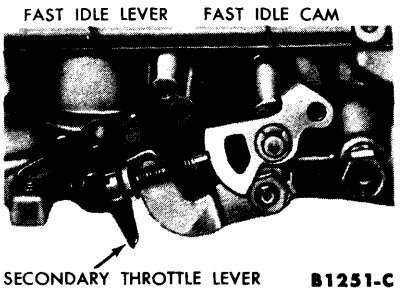

FIG. 16—Fast Idle Cam and Lever Installation

Slide the secondary shaft into the main body. Referring to the lines scribed on the secondary throttle plates, install the throttle plates in their proper location. Follow the procedure in step 2 for the primary throttle plates. Adjust the secondary throttle plates (refer to "Carburetor Bench Adjustments").

2. Install the hot engine idle spring and screw.

3. Install the anti-stall dashpot if so equipped.

4. Install the distributor vacuum passage fitting. Place the fast idle lever assembly on the primary throttle shaft and install the retaining washer and nut (Fig. 16). Slide the fast idle cam on the boss on the main body and install the retainer (Fig. 16).

5. Position the torsion spring on the thermostatic spring with the long tang against the lug on the lever (Fig. 17-A). Slide the lever and spring assembly on the choke housing shaft with the short tang of the spring resting on the center prong of the lever

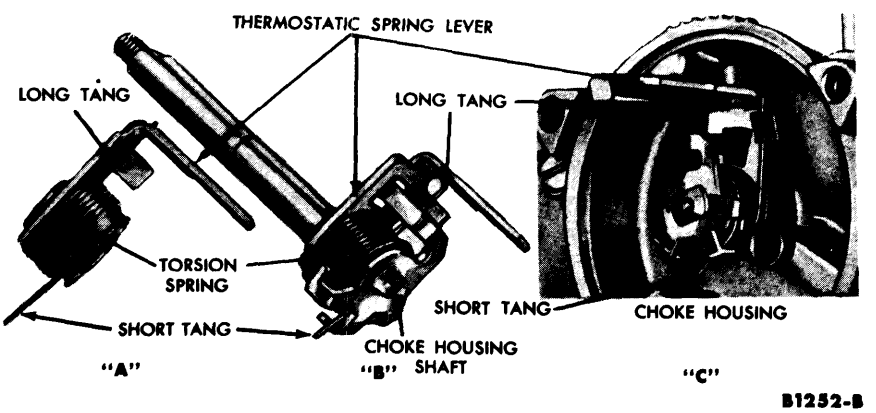

FIG. 17—Choke Housing Torsion Spring Installation

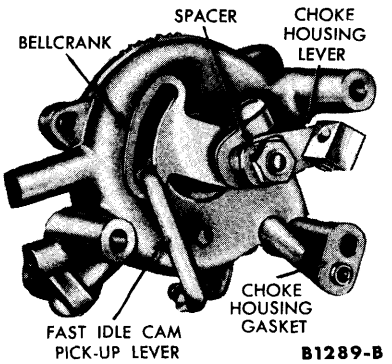

FIG. 18—Bellcrank Installation

and the lug on the shaft positioned in the slot in the thermostatic spring lever (Fig. 17-B). Place the spacer on the choke housing shaft. Slide the assembly into the choke housing (Fig. 17-C). Install the retaining clip in the groove on the choke plate shaft.

6. Position the bellcrank on the choke housing shaft and temporarily tighten the screw (Fig. 18).

7. Place the choke housing lever and spacer on the choke housing shaft and install the retaining nut. Install the fast idle cam pick-up rod and washer on the bellcrank (Fig. 18).

8. Place the gasket on the vacuum pick-up port of the choke housing and install the choke housing on the main body. Insert the fast idle cam pick-up lever into the fast idle cam as the choke housing is positioned into place. Install the pick-up lever retainer. The thermostatic spring housing is installed after the choke plate has been adjusted.

9. Drop the accelerating pump inlet ball check in the inlet passage of the accelerating pump chamber and install the washer and retaining screw. Install the diaphragm return spring on the boss in the chamber. Insert the diaphragm assembly in the cover and place the cover and diaphragm assembly in position on the main body. Install the cover screws finger-tight. Push the accelerating pump plunger the full distance of its travel and tighten the cover screws. Install the accelerating pump operating rod. Refer to "Carburetor In-Chassis Adjustments" in Part 3-1 and adjust the accelerating pump stroke.

10. Invert the main body. Using a socket wrench, install the power valve and gasket. Install the cover and gasket. Install the idle adjusting needles and springs. Turn the needles in gently with the fingers until they just touch the seat, then back them off 1-1½ turns for a preliminary idle adjustment.

11. Install the secondary operating diaphragm on the secondary operating lever. Install the diaphragm return spring on the cover. Install the cover with the screws finger-tight. With the diaphragm in the extended position, tighten the cover screws. Install the secondary diaphragm rod.

12. Using a jet wrench, install the primary main jets and the fuel inlet seat. **Be sure the correct jets are installed.** Position the float shaft retainer in the groove on the fuel inlet needle seat. Slide the float shaft in the float lever. Position the anti-splash washer on the fuel inlet needle. Install the clip in the groove on the fuel inlet needle and hook the assembly on the float tab. **The fuel inlet needle and seat are matched assemblies. Be sure the correct needle and seat are assembled together.** Install the float assembly in the fuel bowl so that the fuel inlet needle enters the needle seat, and the float shaft rests in its guides. Using a hook, position the shaft retainer in the grooves on the shaft. Refer to "Carburetor Bench Adjustments," and check the float setting.

13. Repeat step 12 on the secondary stage fuel bowl.

14. Drop the accelerating pump discharge ball into its passage in the primary side of the main body. Seat the ball with a brass drift and a light hammer. Make sure the ball is free. Drop the accelerating pump discharge weight on top of the ball. Position the primary booster venturi assembly and gasket in the main body. Install the retaining screw. **The primary booster screw is hollow.** Install the screen and fuel inlet fitting and gasket.

15. Position the secondary booster venturi assembly and gasket in the main body and install the gasket and retaining screw.

16. Position the air horn gasket on the main body (Fig. 19). Position the air horn on the main body so that the choke plate rod fits into the clevis on the choke housing lever. Install the air horn retaining screws.

17. Install the thermostatic spring

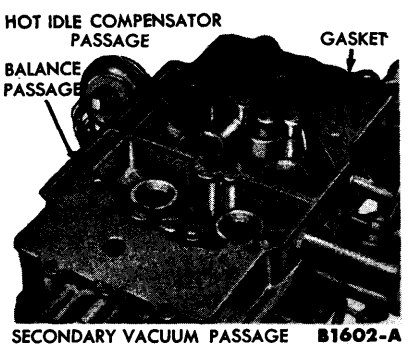

FIG. 19—Main Body Gasket

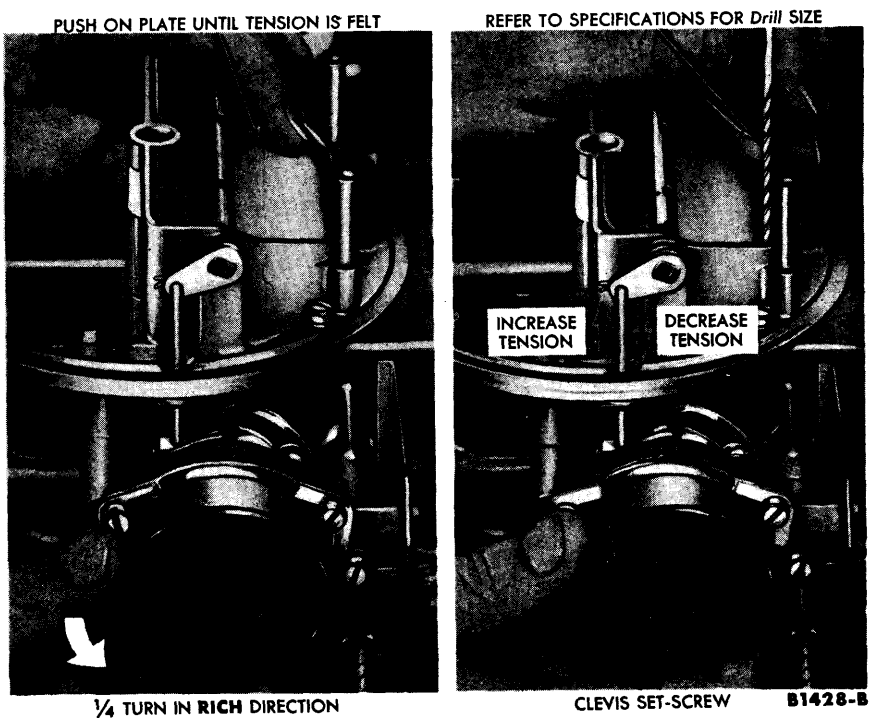

FIG. 20—Choke Plate Clearance

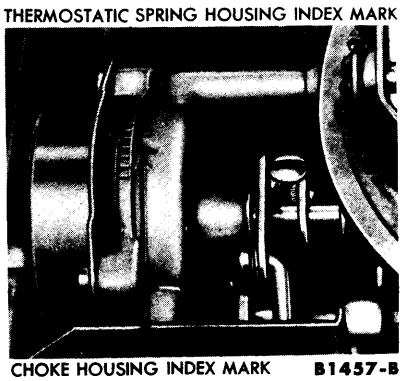

FIG. 21—Automatic Choke Setting

housing with the retaining screws loose (Fig. 20). Turn the housing ¼ turn counterclockwise from the index mark (in the rich direction).

18. Move the choke plate toward the open position by pressing on the lower portion of the choke plate until resistance to movement is felt. At this point, the clearance between the front edge of the choke plate and the air horn should be within specifications. **Do not force the choke plate or the tang on the lever in the choke housing will bend.** Check the clearance by placing the proper size drill between the front edge of the plate and the air horn (Fig. 20).

19. If the choke plate clearance is not within specifications, loosen the clevis set screw using a 1/16-inch Allen wrench. Position the proper size drill between the front edge of the choke plate and air horn (Fig. 20). Hold the choke plate against the drill and move the choke plate rod up or down until the specified clearance is obtained. Tighten the set screw on the clevis to secure the adjustment.

20. Set the thermostatic housing to the proper index mark (Fig. 21). **The setting may be 2 notches on either side of the mid-position mark to suit operating conditions.**

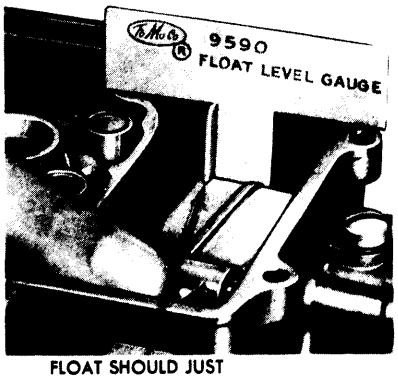

FIG. 22—Bench Float Setting

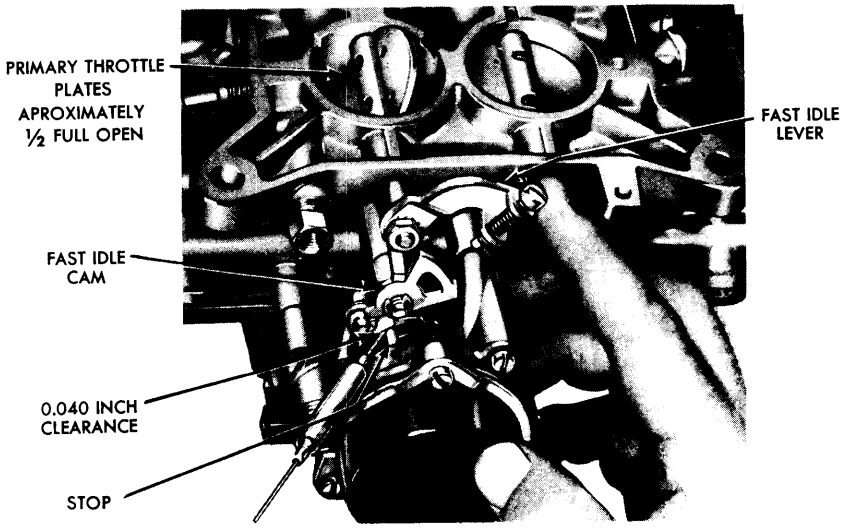

FIG. 23—Fast Idle Cam and Bellcrank Lever Adjustment

21. Refer to "Carburetor Bench Adjustments" and adjust the fast idle cam and bellcrank lever.

CARBURETOR BENCH ADJUSTMENTS

FLOAT ADJUSTMENT

1. Remove the air horn.

2. With the float raised and the fuel inlet needle seated, check the distance between the top surface of the main body and the top surface of the float for conformance to specifications. Take the measurement at a point ⅛ inch from the free end of the float and 5/16 inch in from the side of the float adjacent to the inside wall of the fuel bowl. If the cardboard gauge is used, place the float gauge in the corner of the enlarged end section of the fuel bowl (Fig. 22). The gauge should touch the float near the end, but not on the end radius. Depress the float tab to seat the fuel inlet needle. The float height is measured from the gasket surface of the main body with the gasket removed. If necessary, bend the tab on the float to bring the setting within limits. This should provide the proper fuel level.

FAST IDLE CAM AND BELLCRANK LEVER

1. Open the primary throttle plates so that the fast idle adjusting screw will not interfere with the fast idle cam when the bellcrank is rotated.

2. Hold the choke plate in the closed position by turning the choke housing shaft to the left (counterclockwise).

3. Measure the clearance between the cast stop on the back of the choke housing and the edge of the fast idle cam (Fig. 23). The clearance should be 0.040 inch.

4. To adjust the clearance, loosen the bellcrank lever screw and turn the bellcrank lever as required to obtain the correct clearance. To maintain proper vertical alignment between the bellcrank lever and the fast idle cam, the bellcrank lever must be positioned against the "E" clip retainer on the choke housing shaft.

After the correct adjustment is obtained, tighten the screw.

SECONDARY THROTTLE PLATE ADJUSTMENT

1. Hold the secondary throttle plates closed.

2. Turn the secondary throttle shaft lever adjusting screw out (Fig. 24) until the secondary throttle plates stick in the throttle bores and there is 0.009-inch clearance between the screw and the secondary lever.

3. Turn the screw in one full turn.

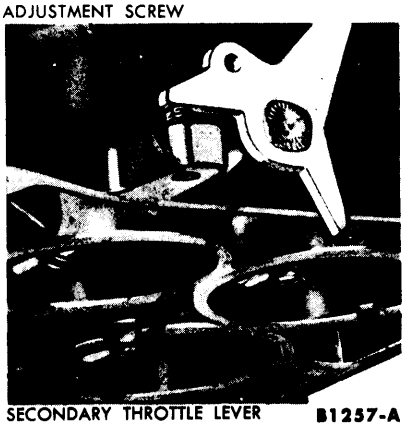

FIG. 24—Secondary Throttle Plate Adjustment

PART 3-3 FUEL PUMP, FUEL TANK, AND FUEL LINES

FUEL PUMP

The fuel pump is mounted on left side of the cylinder front cover. It is actuated by camshaft eccentric.

The fuel filter is integral with the fuel pump.

TESTS

Fuel pump tests are covered in Part 3-1.

REMOVAL

1. Disconnect the fuel lines at the pump.
2. Remove the pump retaining bolts, then remove the pump and gasket. Discard the gasket.

INSTALLATION

1. Remove all the gasket material from the pump mounting pad and pump flange. Apply sealer to both sides of a new gasket.
2. Position the gasket on the pump flange, and hold the pump in position against the mounting pad. Make sure the rocker arm is riding on the camshaft eccentric.
3. Press the pump tight against the pad. Install the retaining screws, and alternately torque them to specifications. Connect the fuel lines.
4. Operate the engine and check for leaks.

DISASSEMBLY

1. Remove the filter housing, gasket, and filter element. Discard the filter element.
2. Scribe marks on the fuel pump body, valve housing, and valve housing cover so that these parts can be assembled in their original position.
3. Remove the valve housing assembly. Separate the valve housing from the cover and note the position of the pulsator diaphragm so that it can be assembled in its proper position. **Do not remove the fuel valves from the valve housing. The valve housing is replaced as an assembly.**

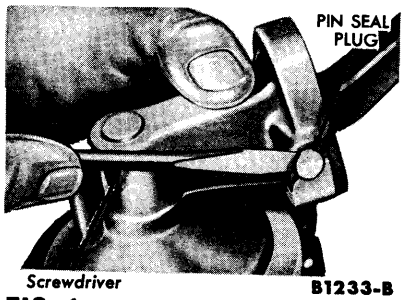

FIG. 1—Rocker Arm Pin Seal Plug Removal

4. Remove the rocker arm return spring.
5. Scrape away the staking mark and remove the rocker arm pin seal plug as shown in Fig. 1.
6. Press the fuel pump diaphragm into the fuel pump body to release the tension on the rocker arm and allow the rocker arm pin to fall out. If the pin does not come out freely, use needle nose pliers (Fig. 2).
7. Press the diaphragm into the fuel pump body and pull the rocker arm out to unhook the rod from the rocker arm link (Fig. 3).
8. Remove the fuel pump diaphragm assembly. Do not disassemble as the diaphragm and spring are serviced as an assembly.

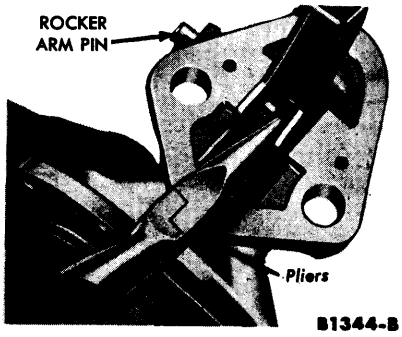

FIG. 2—Rocker Arm Pin Removal or Installation

CLEANING AND INSPECTION

Clean the fuel pump body, valve housing, cover, and filter housing in solvent. Blow out all body, housing, and cover passages. Inspect the pump body, valve housing, and cover for cracks or damage and replace them if necessary. If the fuel valves are not serviceable and replacement is necessary, replace the valve housing and valves as an assembly. Inspect the mounting flange for distortion. Remove the pump body or lap the distorted flange if necessary.

ASSEMBLY

The fuel pump assembly is shown in Fig. 4.

1. Position the fuel pump diaphragm assembly into the pump body. Then apply pressure on the diaphragm spring so that the rocker arm can be hooked on the rod as shown in Fig. 3.
2. Align the rocker arm pin holes by applying slight pressure on the diaphragm spring, then install the rocker arm pin (Fig. 2).
3. Install a new rocker arm pin seal plug. Stake the plug in position.
4. Position the rocker arm return spring on the boss in the pump body. Compress the spring and slip it over the tang in the rocker arm.

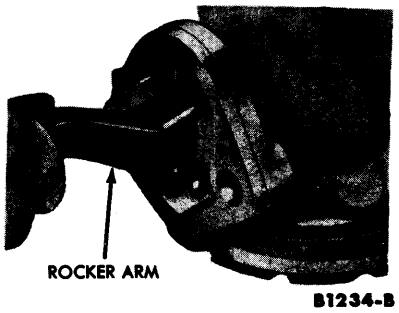

FIG. 3—Fuel Pump Diaphragm Removal or Installation

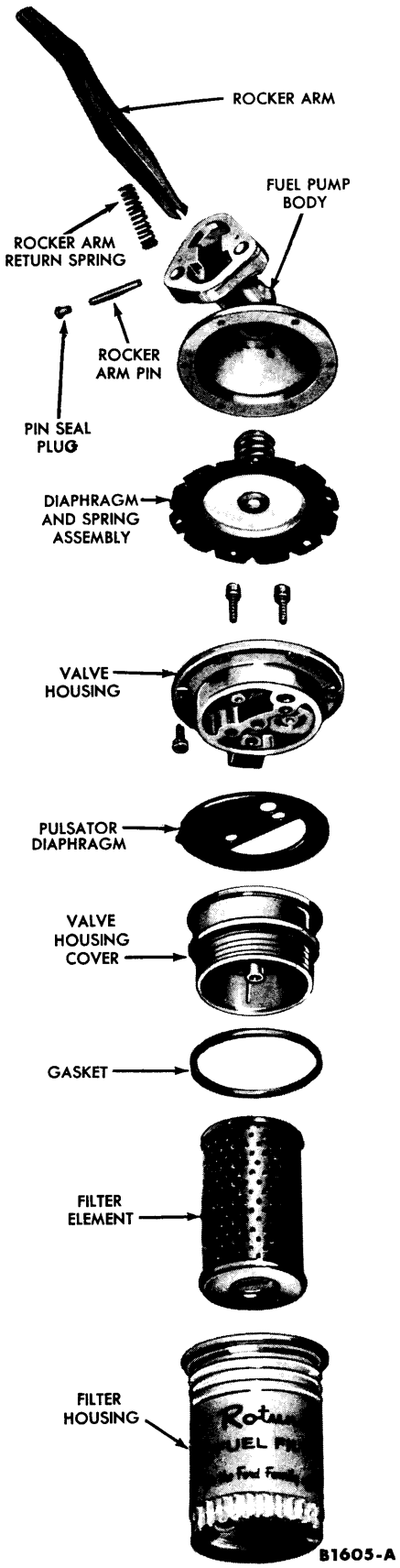

FIG. 4—Fuel Pump Assembly

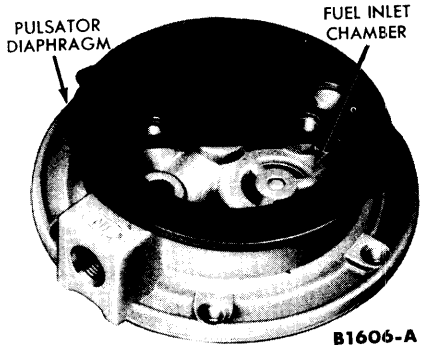

FIG. 5—Pulsator Diaphragm Installation

5. Place a new pulsator diaphragm on the valve housing in the position previously noted on disassembly (opening in the diaphragm over the fuel inlet chamber as shown in Fig. 5). Position the cover on the valve housing, aligning the scribed lines on the cover with the line on the valve housing. Be sure the pulsator diaphragm extends evenly around the edge of the cover. Install and tighten the two retaining screws and lock washers inside the valve housing.

6. Align the scribe line on the valve housing and the line on the fuel pump body. Hold the valve housing assembly tight against the fuel pump body and install the six screws and lock washers. Be sure the fuel pump diaphragm extends evenly around the edge of the valve housing before tightening the retaining screws.

7. Place a new filter element over the spout in the valve housing cover. Position the gasket and screw the filter housing on the pump. Hand tighten the filter housing until the gasket contacts the pump, then advance it ⅛ turn.

FUEL TANK REPLACEMENT

1. Remove the fuel tank filler cap. Remove the drain plug and drain the fuel into a suitable container. Disconnect the fuel line at the tank. Disconnect the tank vent tube at the tank.

2. Remove the filler pipe by following steps 1 and 2 under "Filler Pipe Replacement."

3. Remove the nuts and bolts retaining the tank support straps and lower the tank slightly. Disconnect the fuel gauge sending unit at the tank. Remove the fuel tank. Remove the fuel gauge sending unit.

4. Install the fuel tank drain plug. Install the fuel gauge sending unit with a new gasket in the new tank.

5. Position the tank and connect the fuel gauge sending unit wire. Install the nuts and bolts retaining the fuel tank support strap.

6. Install the filler pipe by following steps 3 and 4 under "Fuel Tank Filler Pipe Replacement."

7. Connect the vent tube and the fuel line. Fill the tank and install the filler cap. Check for leaks.

FUEL LINE REPLACEMENT

The fuel line that runs from the fuel pump flexible hose to the tank is not serviced as an assembly. It must be made up from the 5/16-inch OD line serviced in 25-foot rolls.

1. Drain the fuel from the tank. Disconnect the fuel line at the tank flexible hose and at the fuel pump flexible hose. Remove the line from holding clips along underbody.

2. Cut the new line to approximately the same length as the original. Square the ends of the line with a file. Ream the inside edges of the line with the reamer blade on the tube cutter. Be sure metal chips are removed from the inside of the tube.

3. Position the protective loom on the new line. Bend the line to conform to the contour of the original line.

4. Position the line in the underbody clips. Connect the line to the tank flexible hose and to the fuel pump flexible hose. Fill the tank and check for leaks.

FILLER PIPE REPLACEMENT

1. Remove the filler pipe support bracket retaining screws.

2. Rotate and pull the filler pipe to remove it from the fuel tank. Remove and discard the O-ring seal.

3. Install a new O-ring seal in the fuel tank. Position the filler pipe and rotate the pipe into the fuel tank until the seal area on the filler pipe firmly contacts the O-ring seal.

4. Install the filler pipe bracket retaining screws.

PART 3-4 SPECIFICATIONS

FUEL PUMP

FUEL PUMP STATIC PRESSURE (PSI AT 500 ENGINE RPM)	
390	4.0-6.0
MINIMUM FUEL PUMP VOLUME (FLOW AT 500 ENGINE RPM)	
390	1 pint within 20 seconds
MINIMUM INTAKE VACUUM (INCHES OF MERCURY @ 500 ENGINE RPM)	
390	6.0
ECCENTRIC TOTAL LIFT	
390	0.690-0.710 inch

CARBURETOR

390 V-8 (Carburetor No. C2SE-9510-C is used with the automatic transmission)

MAIN METERING JET IDENTIFICATION NO.

PRIMARY

0-5,000 Feet	54
5,000-10,000 Feet	52
10,000-15,000 Feet	50

SECONDARY

0-5,000 Feet	62
5,000-10,000 Feet	60
10,000-15,000 Feet	58

CARBURETOR (Continued)

POWER VALVE IDENTIFICATION NO.

0-5,000 Feet	Plain
5,000-10,000 Feet	65
10,000-15,000 Feet	55

DRY FLOAT INITIAL SETTING
PRIMARY AND SECONDARY
21/32 ± 1/64 inch from the machined surface of the main body to the top of the free end of the float, with the float in the uppermost position.

FUEL LEVEL SETTING
PRIMARY AND SECONDARY
29/32 ± 1/32 inch below the top machined surface of the main body

VENTURI SIZE

PRIMARY	1 1/8
SECONDARY	1 3/16

CHOKE THERMOSTATIC SPRING HOUSING INITIAL SETTING
Set at 2 digits in the lean direction.

ANTI-STALL DASHPOT CLEARANCE . . 0.060-0.090

INITIAL IDLE MIXTURE ADJUSTMENT . . . . . 1-1½ turns open

FAST (COLD) IDLE ADJUSTMENT (with fast idle screw on the kickdown step of the cam) (hot engine) . . . . . 1500 RPM

POWER VALVE OPENS AT . . 7-10 inches of mercury

FUEL TANK CAPACITY

390	20 gallons

1962 FORD THUNDERBIRD SHOP MANUAL

GROUP 4

COOLING SYSTEM

		PAGE
PART 4-1	COOLING SYSTEM MAINTENANCE	4-2
PART 4-2	WATER PUMP OVERHAUL	4-7
PART 4-3	SPECIFICATIONS	4-10

PART 4-1 COOLING SYSTEM MAINTENANCE

Section		Page
1	Trouble Diagnosis	4-2
2	General Maintenance	4-3
3	Radiator, Hoses, and Thermostat	4-3
4	Fan and Belts	4-4
5	Variable Speed Fan Drive	4-5

The cooling system consists of the radiator supply tank and cap, radiator, water pump, thermostat, fan assembly and the fan drive belt. The power steering pump drive belt is covered in Part 7-1 and the air conditioner drive belt is covered in Part 10-3.

1 TROUBLE DIAGNOSIS

Engine overheating and slow engine warm-up are the two engine troubles most commonly attributed to the cooling system.

Loss of coolant and the accumulation of rust and scale in the system are the main causes of overheating. Coolant loss may be caused by external leakage at the radiator, radiator supply tank, water pump, hose connections, heater, and core plugs. Coolant loss may be caused also by internal leakage due to a defective cylinder head gasket, improper tightening of the cylinder head bolts, or a warped cylinder head or cylinder block gasket surface.

Internal leakage can be detected by operating the engine at fast idle and looking for the formation of bubbles in the radiator supply tank. Oil in the radiator supply tank may indicate leakage in the engine block or a leak in the automatic transmission oil cooler. Water formation on the oil level dipstick could be an indication of internal leakage.

Rust and scale that form in the engine coolant passages are carried into the radiator passages by the circulation of the coolant. This clogs the radiator passages and causes overheating. Rust can be detected by the appearance of the coolant. If the coolant has a rusty or muddy appearance, rust is present.

A defective thermostat valve that remains open will cause slow engine warm-up.

TROUBLE DIAGNOSIS

ENGINE OVERHEATS	Insufficient coolant. Belt tension incorrect. Radiator fins obstructed. Thermostat stuck closed.	Cooling system passages blocked by rust, scale, or other foreign matter. Water pump inoperative. Faulty radiator pressure cap. Faulty fan drive.
ENGINE FAILS TO REACH NORMAL OPERATING TEMPERATURE	Thermostat stuck open, or of incorrect heat range. Temperature sending unit defective (causing gauge to indicate low engine temperature).	Temperature gauge defective (not indicating true engine temperature).
LOSS OF COOLANT	Leaking radiator or radiator supply tank. Loose or damaged hose connections. Water pump leaking. Cylinder head gasket defective. Improper tightening of cylinder head bolts.	Cylinder block core plugs leaking. Cracked cylinder head or block, or warped cylinder head or block gasket surface. Radiator pressure cap defective or wrong type.

2 GENERAL MAINTENANCE

Correct coolant level is essential for maximum circulation and adequate cooling. In addition, for the cooling system to perform its function, it must receive proper care. This includes keeping the radiator fins clean and a periodic inspection of the cooling system for leakage.

Use care when removing the radiator cap to avoid injury from escaping steam or hot water.

In production, the cooling system is filled with a new long life coolant. This coolant protects to 35° below zero. It will not be necessary to provide special anti-freeze protection except in areas where temperatures fall below this level. For year round protection from corrosion and overheating, and for low temperature protection, all coolant added should be a mixture of 50% FoMoCo coolant concentrate and water. **Use of greater than a 50-50 concentrate should be avoided to prevent possible overheating during warm weather. Do not mix permanent-type anti-freeze with the methanol type.**

Refer to Group 12 for the recommended cooling system drain interval.

CLEANING COOLING SYSTEM

To remove rust, sludge and other foreign material from the cooling system, use either FoMoCo Regular Cooling System Cleanser or in severe cases use Heavy Duty Cleanser. Removal of such material restores cooling efficiency and avoids overheating.

In severe cases where cleaning solvents will not properly clean the cooling system for efficient operation, it will be necessary to use the pressure flushing method.

Various types of flushing equipment are available. If pressure flushing is used, make sure the cylinder head bolts are properly tightened to prevent possible water leakage into the cylinders.

Always remove the thermostat prior to pressure flushing.

A pulsating or reversed direction of flushing water flow will loosen sediment more quickly than a steady flow in the normal direction of coolant flow.

RUST INHIBITOR

Use FoMoCo Rust Inhibitor after the cooling system has been cleaned to prevent additional corrosion or rust. Rust inhibitor does not remove rust nor dissolve rust. It is a preventive only and not a cleaner.

All anti-freeze sold by reputable manufacturers contains anti-rust additive. Therefore, the addition of rust inhibitor when anti-freeze is used is not necessary.

DRAINING AND FILLING THE COOLING SYSTEM

To drain the radiator, open the drain cock located at the bottom corner of the radiator. Drain the cylinder block by removing the drain plugs located on both sides of the block (Fig. 1).

To fill the cooling system, close the radiator drain cock and replace the drain plugs. Disconnect the heater outlet hose at the water pump, to bleed or release trapped air from the system. Fill the system until the coolant begins to flow from the heater outlet hose, then connect the heater outlet hose. Operate the engine until normal operating temperature has been reached and add more coolant to fill the radiator supply tank. **After the initial fill, the coolant level will drop approximately 1 quart after the engine has been operated about 20 minutes at 2000 rpm. This is due to the displacement of entrapped air.**

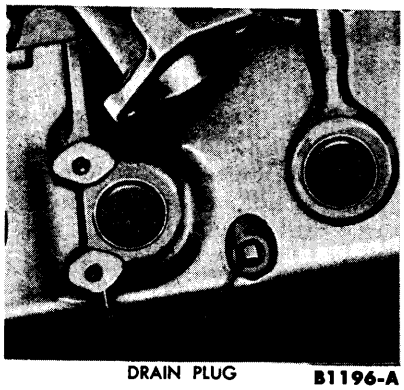

FIG. 1—Typical Cylinder Block Drain Plug

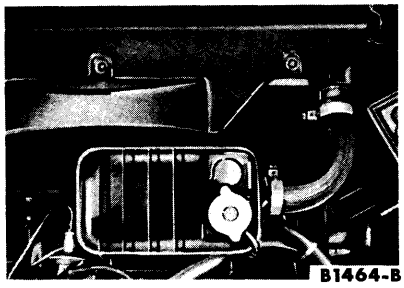

FIG. 2—Radiator Supply Tank

3 RADIATOR, HOSES, AND THERMOSTAT

RADIATOR REPLACEMENT

1. Drain the cooling system.
2. Remove the radiator fan guard.
3. Disconnect the radiator upper and lower hoses at the radiator.
4. Disconnect the oil cooler inlet and outlet lines at the radiator.
5. Remove the radiator upper and lower support bolts, then remove the radiator. The radiator supply tank need not be removed unless required. If a new radiator is to be installed, remove the drain cock from the old radiator and install it on the new radiator.
6. Position the radiator in the chassis and install and tighten the support bolts.
7. Connect the oil cooler inlet and outlet lines.
8. Connect the radiator upper and lower hoses.
9. Install the radiator fan guard.
10. Close the drain cock. Fill and bleed the cooling system. Operate the engine and check for coolant leaks and the transmission oil cooler lines

for leakage. Check the transmission fluid level.

RADIATOR SUPPLY TANK REPLACEMENT

1. Drain the cooling system so that the coolant level is below the radiator supply tank. Disconnect the radiator upper hose at the radiator supply tank (Fig. 2).

2. Remove the supply tank retaining screws. Remove the supply tank. Remove the thermostat and gasket from the supply tank.

3. Remove all the gasket material from the mounting surfaces of the supply tank and the intake manifold. Coat a new supply tank gasket with sealer, then position the gasket on the intake manifold opening. **The supply tank gasket must be positioned on the manifold before the thermostat is installed.**

4. Install the poppet-type thermostat in the manifold opening with the copper pellet or element toward the engine. Install the cartridge-type thermostat with the word "TOP" toward the top of the engine and the valve end of the thermostat facing outward. **If the thermostat is improperly installed, it can cause a retarded flow of coolant.**

5. Position the supply tank against the manifold, then install and torque the retaining screws to specifications.

If a new tank is installed, remove the overflow hose from the old tank and install it on the new tank.

6. Connect the radiator upper hose. Fill and bleed the cooling system. Check for leaks and proper coolant level after the engine has reached normal operating temperature.

RADIATOR HOSES

Radiator hoses should be replaced whenever they become cracked.

1. Drain the radiator, then loosen the clamps at each end of the hose to be removed. Slide the hose off the radiator connection and the radiator supply tank connection (upper hose) or the water pump connection (lower hose).

2. Position the clamps on each end of the hose. Slide the hose on the connections. Tighten the clamps firmly. Make sure the clamps are beyond the bead on the connections. Fill the radiator with coolant. Operate the engine for several minutes, then check the hoses and connections for leaks. Check for proper coolant level after the engine has reached normal operating temperature.

THERMOSTAT

The engine is equipped with a poppet-type thermostat or a spring cartridge-type thermostat. Both types are mounted inside the thermostat housing at the radiator supply tank mounting surface.

The thermostat used in production is for use with water or permanent type anti-freeze. A thermostat is also available for use with non-permanent-type anti-freeze or water. For operating temperatures, refer to specifications.

Do not attempt to repair the thermostat. It should be replaced if it is not operating properly.

To remove or install the thermostat, refer to "Radiator Supply Tank Replacement."

THERMOSTAT TEST

1. Insert a piece of 0.003-inch feeler stock ⅛-inch wide under the opening sleeve of the poppet-type thermostat or under the valve of the cartridge-type thermostat. Suspend the thermostat, by the feeler stock, in a large container of water so that it is completely submerged, and 1 to 2 inches from the bottom.

Suspension of the thermostat in this manner will give an accurate indication when the sleeve starts to open. The thermostat will drop off the feeler stock when the sleeve starts to open. If the thermostat will not stay on the feeler stock when it is first inserted, discard the thermostat.

2. Suspend a thermometer in the water so that the bulb is at the same level as the thermostat element. Heat the water slowly, and stir it frequently to normalize the temperature. If the sleeve or valve opens at a temperature of more than 5° below the start-to-open specification, or if the sleeve or valve does not open at a temperature of more than 5° above the start-to-open specification, replace the thermostat. The sleeve or valve should open to a minimum of 0.26 inch from its seat in boiling water. If the sleeve or valve will not open this far, replace the thermostat.

4 FAN AND BELTS

The fan is mounted on a hub which is pressed on the water pump shaft. One belt drives the water pump, fan, and generator.

FAN REPLACEMENT

The fan is bolted to the hub by four cap screws and lock washers. The screws used to fasten the fan also retain the water pump pulley.

On engines not equipped with a variable speed fan drive, a pulley-to-fan spacer is used.

1. Remove the fan guard. Remove the screws and lock washers retaining the fan (and spacer). Remove the fan (and spacer).

2. Hold the fan against the pulley (and spacer). Install the lock washers and screws. Install the fan guard.

FAN BELTS

The fan belts should be properly adjusted at all times. Loose belts cause improper generator, fan, and water pump operation. A belt that is too tight places a severe strain on the water pump and the generator bearings.

BELT TENSION

1. Install the belt tension tool

(T62L-8620-A) on the drive belt and check the tension following the instructions furnished by the tool manufacturer (Fig. 3).

2. If adjustment is necessary, loosen the generator mounting bolts and the generator adjusting arm bolt. Move the generator toward or away from the engine until the correct tension is obtained. Tighten the generator adjusting arm bolt and the mounting bolts, before checking the tension.

REMOVAL

1. Disconnect the power steering pump bracket from the water pump and remove the drive belt. Wire the power steering pump assembly to the left side of the car in a position that will prevent the oil from draining out.

Tool—T62L-8620-A

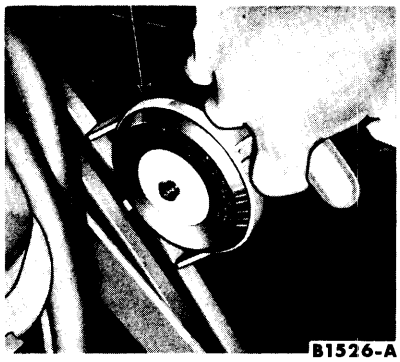

FIG. 3—Drive Belt Tension

On a car with an air conditioner, remove the compressor drive belt.

2. Loosen the generator mounting bolts and the generator adjusting arm bolt. Move the generator toward the engine. Remove the belts from the generator and crankshaft pulleys, and lift them over the fan.

INSTALLATION

1. Place the belts over the fan. Insert the belts in the water pump pulley, crankshaft pulley, and generator pulley grooves. Adjust the belt tension.

2. On a car with an air conditioner, install and adjust the drive belt.

3. Install the power steering pump drive belt and attach the pump bracket to the water pump. Adjust the drive belt tension.

5 VARIABLE SPEED FAN DRIVE

The variable speed fan drive (Fig. 4) is a fluid coupling which uses a silicone oil. The input side of the coupling is attached to the water pump hub and the fan is attached to the output side.

FAN DRIVE

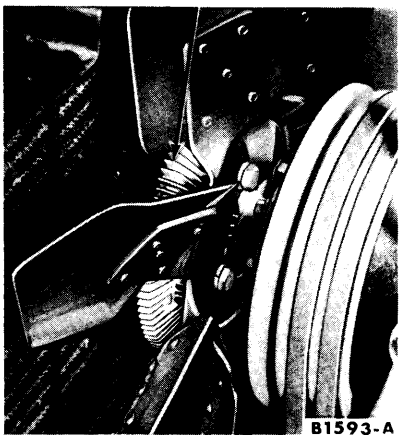

FIG. 4—Fan Drive

OPERATION

Fan speed is automatically regulated by the variable speed fan drive through the torque-carrying capacity of the silicone oil. The more silicone oil in the coupling the greater the fan speed and the less silicone oil the slower the fan speed.

The amount of silicone oil entering the coupling is controlled by a bi-metallic strip located at the front of the fan drive. The bi-metallic strip bows outward with an increase in surrounding temperature and allows a piston to move outward. The piston opens a valve regulating the flow of silicone oil into the coupling from a reserve chamber. The silicone oil is returned to the reserve chamber through a bleed hole when the valve is closed. Therefore, when the air passing through the radiator becomes hotter the fan speed increases and as the temperature decreases the fan slows down.

REMOVAL

1. Remove the radiator fan guard.

2. Remove the nuts retaining the fan drive to the water pump hub. Remove the fan drive and fan as an assembly.

INSTALLATION

1. Position the fan drive and fan to the water pump hub. Install and tighten the retaining nuts.

2. Install the radiator fan guard.

DISASSEMBLY

1. Remove the fan.

2. Remove the bi-metallic strip (Fig. 5) by pushing one end of the strip toward the fan drive body so that it clears the retaining bracket. Then push the strip to the side so that the opposite end of the strip will spring out of the bracket (Fig. 4).

3. Remove the control piston.

CLEANING AND INSPECTION

Check the control piston for free movement in the coupling. If the control piston sticks, remove the piston and clean it with emery cloth. If the piston continues to stick or is damaged, replace it. **The new piston must be the same length as the**

BI-METALLIC STRIP

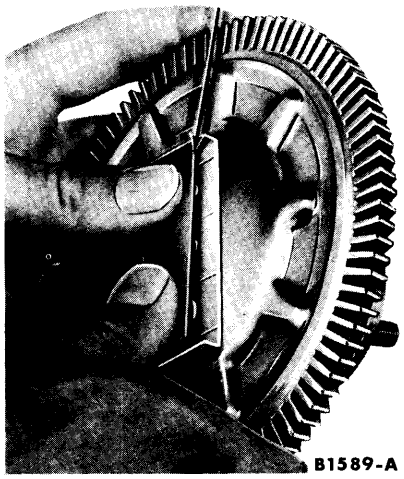

FIG. 5—Fan Drive Assembly

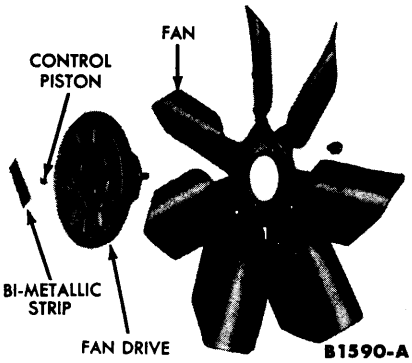

FIG. 6—Fan Drive Assembly

original piston. Therefore, check the length of the new piston with the original piston using a micrometer or calipers.

Check the bi-metallic strip and if it is damaged, replace the complete fan drive assembly. Bi-metallic strips are not interchangeable.

After the fan drive is assembled, clean the drive with a clean cloth and solvent. **The fan drive should not be dipped in any liquid.**

ASSEMBLY

The variable speed fan drive assembly is shown in Fig. 6.

1. Install the control piston (Fig. 7) so that the projection on the end of the piston will contact the bi-metallic strip.

2. Install the bi-metallic strip with the identification stamp "B-1" facing the fan drive.

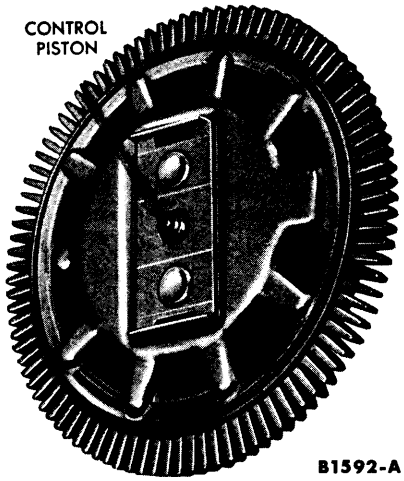

FIG. 7—Control Piston Installed

3. Install the fan.

PART 4-2 WATER PUMP OVERHAUL

Section		Page
1	Removal and Installation	4-7
2	Disassembly and Assembly	4-8

1 REMOVAL AND INSTALLATION

The water pump has a sealed bearing integral with the water pump shaft. The bearing requires no lubrication. The hole in the water pump housing is a bleed hole to allow water that may leak past the seal to be thrown out by the slinger. **This is not a lubrication hole.**

REMOVAL

1. Drain the cooling system.

2. Disconnect the power steering pump bracket from the water pump and remove the drive belt. Wire the power steering pump assembly to the left side of the car in a position that will prevent the oil from draining out.

On a car with an air conditioner, remove the compressor drive belt.

3. Remove the generator adjusting arm bolt at the generator and loosen the adjusting arm bolt at the water pump. Loosen the two generator mounting bolts at the bracket. Move the generator inward and remove the fan belts. Remove the fan, spacer, and pulley.

On engines equipped with a variable speed fan drive, remove the nuts retaining the fan drive to the water pump hub. Remove the fan drive and fan as an assembly and the water pump pulley.

4. Disconnect the radiator lower hose and heater hose at the water pump.

5. Loosen the fuel pump assembly retaining bolts and slide the fuel pump out of the bolts one inch for access to the water pump lower left retaining bolt.

6. Remove the generator bracket retaining bolt at the water pump. Loosen the generator bracket retaining bolt at the cylinder block and move the bracket away from the water pump.

7. Loosen and move the water pump by-pass hose front clamp to the rear. Remove the bolts retaining the water pump to the block, and remove the water pump assembly and gaskets.

8. Remove the generator adjusting arm retaining bolt and remove the arm from the pump.

INSTALLATION

1. Install the generator adjusting arm, fan, spacer, and pulley on the water pump.

On engines equipped with a variable speed fan drive, position the pulley, fan drive and fan on the water pump hub. Install the retaining nuts.

2. Remove all the gasket material from the mounting surfaces of the water pump and the cylinder block. Position new gaskets, coated on both sides with sealer, on the cylinder block, then install the pump.

3. Position the water pump by-pass hose front clamp. Install the generator mounting bracket to the pump, then tighten the generator mounting bracket bolt at the cylinder block.

4. Position the fuel pump assembly and tighten the retaining bolts.

5. Connect the radiator lower hose and heater hose.

6. Position the fan belts over the pulleys and install the generator adjusting arm bolt at the generator. Adjust the tension and tighten the generator adjusting arm bolts, and the mounting bolts at the bracket.

7. On a car with an air conditioner, install and adjust the drive belt.

Install the power steering pump drive belt and attach the pump bracket to the water pump. Adjust the drive belt tension.

8. Fill and bleed the cooling system. Operate the engine until normal operating temperature has been reached, then check for leaks.

2 DISASSEMBLY AND ASSEMBLY

DISASSEMBLY

1. Remove the back plate and gasket from the water pump. Remove the hub from the impeller shaft (Fig. 1).

2. Position the pump on an arbor press and press the shaft off the impeller and out of the housing (Fig. 2).

3. Press out the pump seal (Fig. 3).

ASSEMBLY

The water pump assembly is shown in Fig. 4.

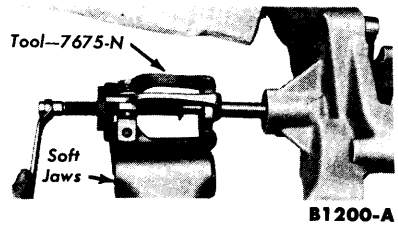

FIG. 1—Hub Removal

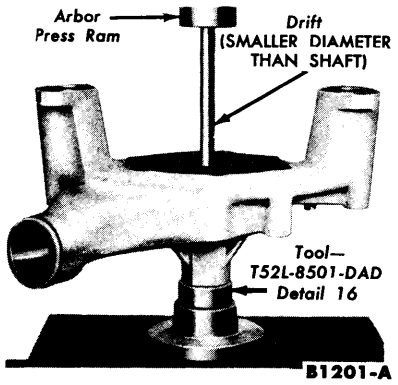

FIG. 2—Shaft Removal

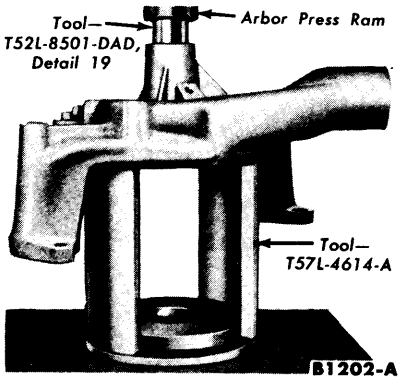

FIG. 3—Seal Removal

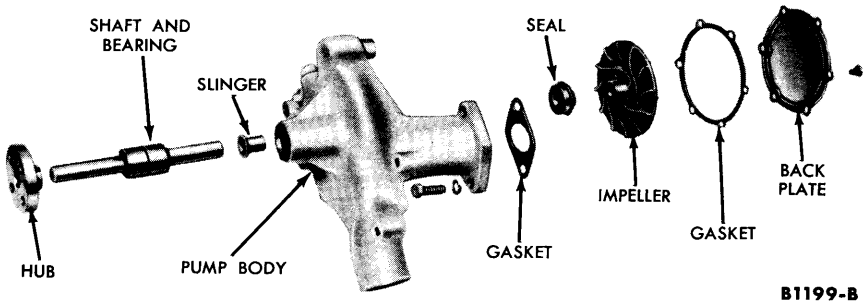

FIG. 4—Water Pump Assembly

1. Remove all gasket material from the mounting faces of the pump and the block.

2. Install the new slinger on the new bearing and shaft assembly furnished in the repair kit (Fig. 5). Locate the slinger in the same relative position as the slinger on the old shaft.

3. Apply a light film of waterproof sealer on a new seal and press the seal into the housing (Fig. 6).

4. Coat the bearing outer diameter lightly with grease. Press the shaft and bearing into the pump housing (Fig. 7).

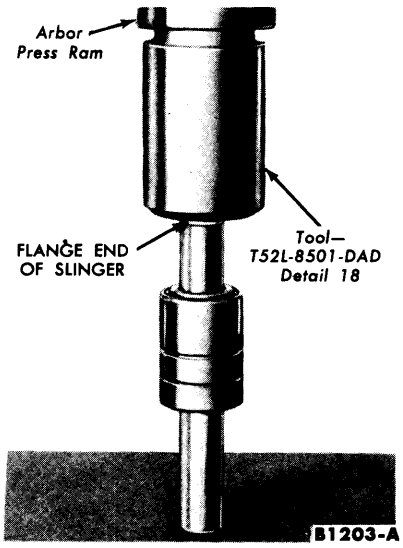

FIG. 5—Replacing Slinger

5. Replace the impeller if it is worn or damaged. Coat the seal rubbing face of the impeller lightly with grease. Press the shaft into the impeller (Fig. 8). **Press the shaft into the impeller until the pump housing lightly touches the face of the adapter ring. If excessive pressure is exerted on the shaft after the rear face of the housing contacts the adapter**

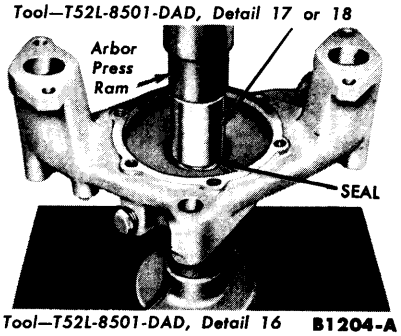

FIG. 6—Seal Installation

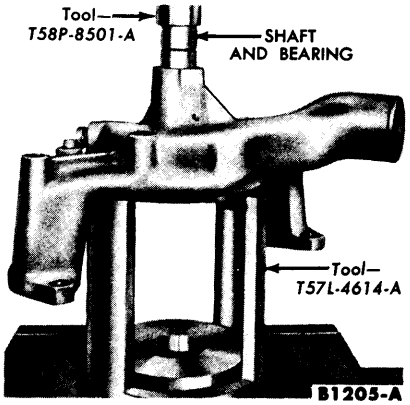

FIG. 7—Shaft Installation

ring, the pump bearing will be damaged. Impeller to pump housing clearance is as shown in the specifications.

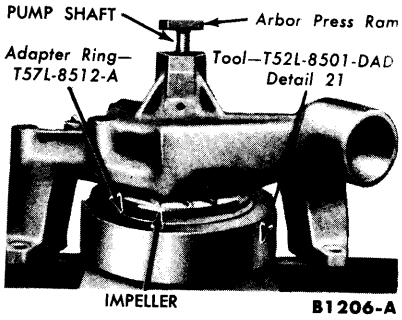

FIG. 8—Impeller Installation

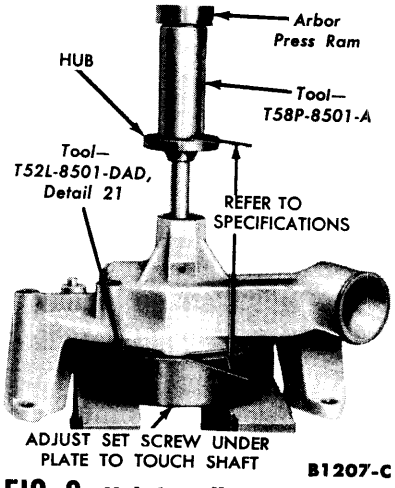

FIG. 9—Hub Installation

6. Tighten the set screw in the bottom of the fixture plate until the screw touches the end of the shaft. Position the fan hub over the shaft and press it into place, holding the specified distance from the housing mounting face to the front face of the hub (Fig. 9).

7. Coat a new back plate gasket with sealer. Install the back plate and gasket.

PART 4-3 SPECIFICATIONS

WATER PUMP, DRIVE BELTS, AND THERMOSTATS

WATER PUMP DRIVE ARRANGEMENT

390—Dual belts drive water pump, fan, and generator.

WATER PUMP TO ENGINE RATIO

390 ..... 0.90:1

PULLEY OR PULLEY HUB TO WATER PUMP HOUSING FACE DIMENSION

390—7.569 inches from front face of pulley hub.

IMPELLER TO HOUSING CLEARANCE

390 ..... 0.070-0.080 inch*

*To housing cover mounting surface.

DRIVE BELT TENSION

Between Generator and Water Pump Pulley (Right Side)

390 ..... New 100-130
*Used 80-110

WATER PUMP, DRIVE BELTS, AND THERMOSTATS (Continued)

DRIVE BELT TENSION (Continued)

Between Water Pump and Air Conditioner Pulley

390 ..... New 120-150
*Used 90-120

Between Crankshaft and Power Steering Pulley

390 ..... New 120-150
*Used 90-120

*Belt operated for a minimum of 10 minutes is considered a used belt.

THERMOSTAT (390 ENGINE)

Low Temperature

Opens °F ..... 155°-162°
Fully Open ..... 182°

High Temperature

Opens °F ..... 174°-181°
Fully Open ..... 201°

COOLING SYSTEM CAPACITY

STANDARD	Quarts
390	19*

*Add 1 quart extra for heater.

1962 FORD THUNDERBIRD SHOP MANUAL

GROUP 5

CRUISE-O-MATIC TRANSMISSION

		PAGE
PART 5-1	DESCRIPTION AND OPERATION	5- 2
PART 5-2	LUBRICATION AND ADJUSTMENTS	5-10
PART 5-3	TROUBLE SHOOTING	5-13
PART 5-4	REPLACEMENT	5-19
PART 5-5	TRANSMISSION OVERHAUL	5-23
PART 5-6	CONVERTER CHECKS	5-37
PART 5-7	SPECIFICATIONS	5-40

PART 5-1 DESCRIPTION AND OPERATION

Section		Page
1	Identification	5-2
2	Torque Converter	5-3
3	Planetary Gear Train, Clutches, Bands, and Servos	5-3
4	Power Flows	5-4
5	Hydraulic Control System Operation	5-6

1 IDENTIFICATION

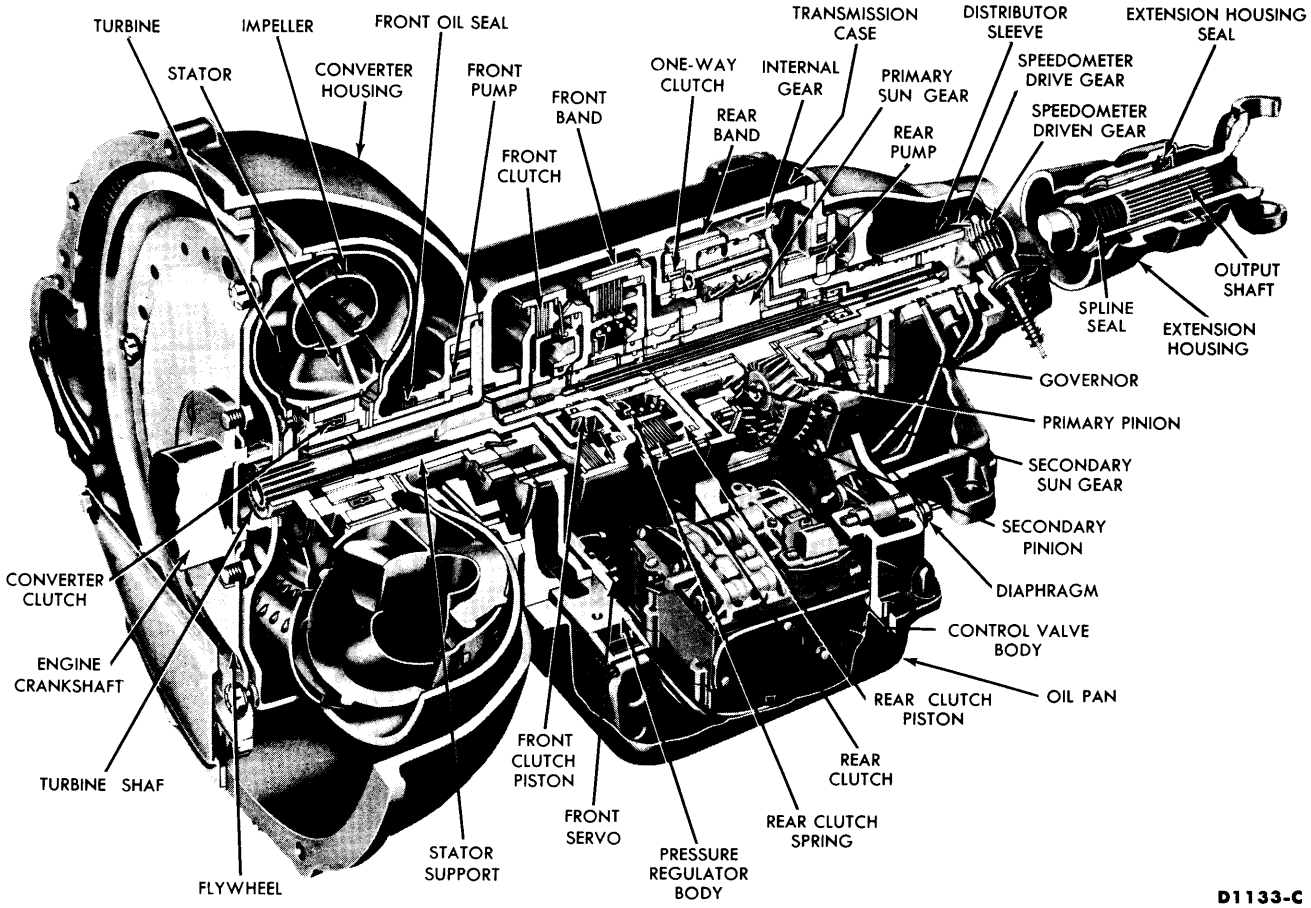

FIG. 1—Cruise-O-Matic Transmission

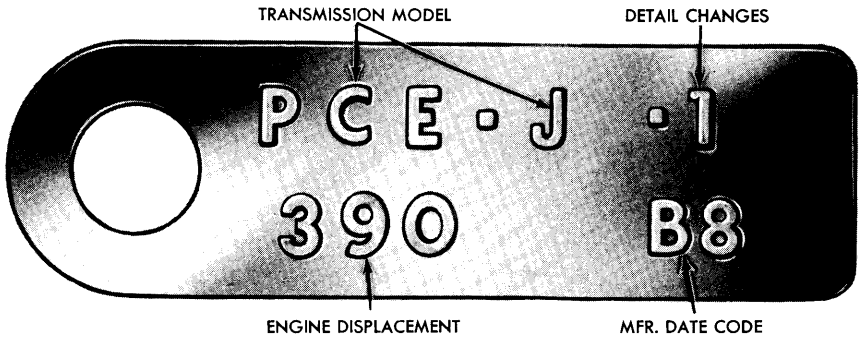

FIG. 2—Cruise-O-Matic Identification Tag

Fig. 1 identifies the Cruise-O-Matic transmission used with the 390 V-8 engine. The identification tag (Fig. 2), attached by an oil pan bolt, includes the model prefix and suffix, as well as a service identification number and date code. The service identification number indicates changes to service details which affect interchangeability **when the transmission model is not changed.** For interpretation of this number,

see the Master Parts Catalog.

The tag must be kept with the individual transmission it was originally installed on. If the tag was removed during disassembly, reinstall it on the same unit.

2 TORQUE CONVERTER

The hydraulic torque converter (Fig. 3) consists of an impeller (pump), a turbine, and a stator. All these parts are enclosed and operate in a fluid-filled housing.

When the engine is running, the fluid in the torque converter flows from the impeller to the turbine and back to the impeller through the stator. This flow produces a maximum torque increase of about 2 to 1 when the turbine is stalled. When enough torque is developed by the engine and impeller, the turbine begins to rotate, turning the turbine shaft.

The converter torque multiplication gradually tapers off as turbine speed approaches impeller speed, and it becomes 1 to 1 when the turbine is being driven at 9/10 impeller speed. This is known as the "coupling point."

When the turbine is rotating at less than 9/10 impeller speed, the converter is multiplying torque. The fluid leaving the turbine blades strikes the front face of the stator blades. These blades are held stationary by the action of a one-way clutch (Fig. 3) as long as the fluid is directed against the front face of the blades.

When the turbine rotates faster than 9/10 impeller speed, the converter no longer multiplies torque. The fluid is directed against the back face of the stator blades. As the one-way clutch permits the stator to rotate only in the direction of impeller rotation, the stator begins to turn with the impeller and turbine. The converter operates as an efficient fluid coupling as long as the turbine speed remains greater than 9/10 impeller speed.

A constant flow of fluid into and out of the converter is maintained. Some of the fluid coming out of the converter is forced through a cooler located in the radiator tank.

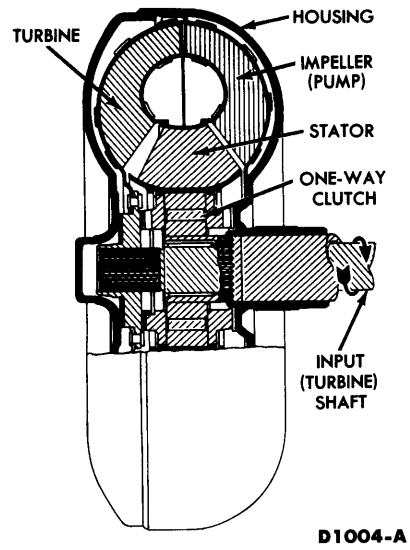

FIG. 3—Cross-Section of Typical Torque Converter

3 PLANETARY GEAR TRAIN, CLUTCHES, BANDS, AND SERVOS

The compound planetary gear train transmits power from the torque converter turbine shaft to the transmission output shaft. Hydraulic clutches and servo-operated bands drive or hold certain gears to provide the various transmission output ratios

PLANETARY GEAR TRAIN

The planetary gear train consists of a primary sun gear, secondary sun gear, primary and secondary pinions which are held in a common carrier, and an internal gear to which the transmission output shaft is attached (Fig. 4).

FRONT CLUTCH

The front clutch drive plates (Fig. 5) are connected to the turbine shaft through the front clutch drum. The driven plates are connected to the primary sun gear shaft.

The front clutch is operated by fluid pressure against the clutch piston. The piston moves against a disc spring which acts as a lever to lock the drive and driven plates together. When the clutch is applied, the primary sun gear is locked to and driven by the turbine shaft. The piston is returned to the release position by the

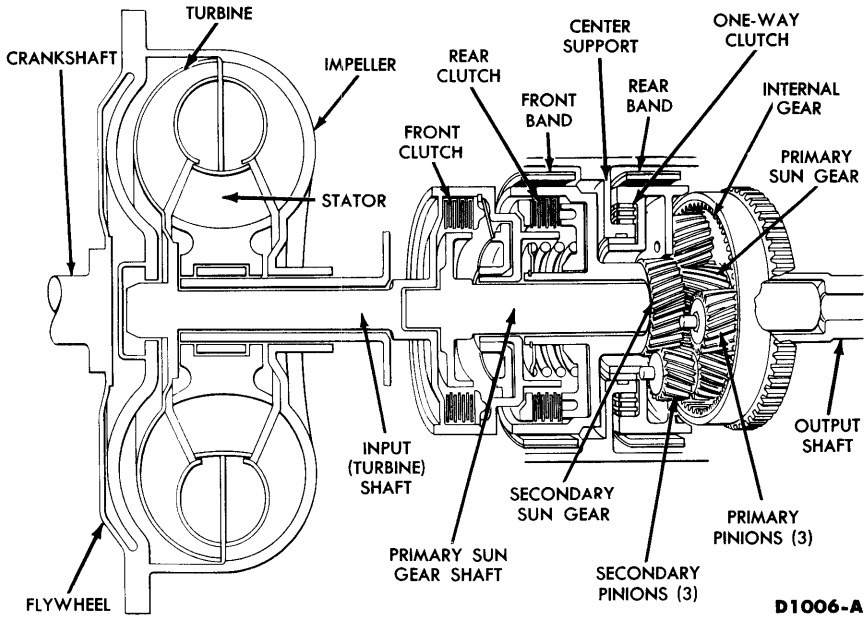

FIG. 4—Planetary Gear Train

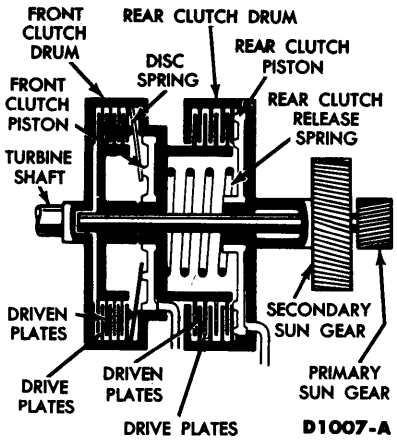

FIG. 5—Front and Rear Clutches

disc spring when the fluid pressure is removed (Fig. 5).

In neutral, the front clutch drum and steel plates are being driven while the bronze plates are stationary. In reverse, the clutch is not applied, since the steel and bronze plates must rotate in opposite directions.

REAR CLUTCH

The rear clutch (Fig. 5) is operated by fluid pressure against the clutch piston. Movement of the piston compresses the release spring and locks the multiple-disc clutch. The rear clutch drive plates are splined to the front clutch drum and the driven plates are connected to the rear clutch drum and secondary sun gear. When the rear clutch is applied (in the reverse and third gear ratios) the secondary sun gear is driven. The piston is returned to the released position by the release spring (Fig. 5).

In neutral, the rear clutch bronze plates are being driven while the steel plates are free. In second gear, the bronze plates are driven, but the steel plates are held stationary. In first gear, the bronze plates are driven clockwise at engine speed while the steel plates are driven counterclockwise.

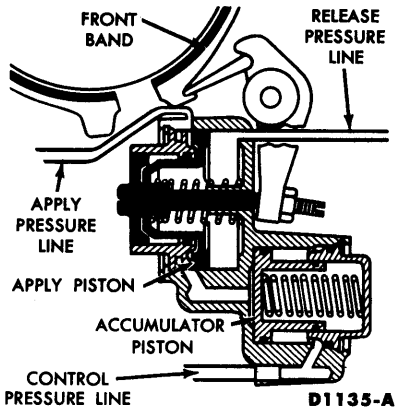

FIG. 6—Typical Front Servo

FRONT BAND AND SERVO

One end of the front band, which encircles the rear clutch drum, is anchored to the transmission case, and the other end is connected to the front servo.

Fluid pressure moves the front servo piston against the inner end of the front servo actuating lever. Force is transmitted through a strut between the outer end of the lever and the end of the band to tighten the band around the rear clutch drum. Under certain conditions, the servo is released by directing fluid pressure to the opposite side of the piston, assisted by release spring force.

An accumulator piston in the front servo operates with the apply piston to cushion band application. Fluid pressure is exerted against both the apply piston and the accumulator piston at the same time. However, the apply piston offers less resistance to the pressure than the accumulator piston, and rapidly moves to start band application (Fig. 6).

When the fluid pressure overcomes the resistance of the accumulator piston, this piston is forced to move. Now, both pistons offer equal resistance to the pressure, and both continue to move more slowly to cushion final band application.

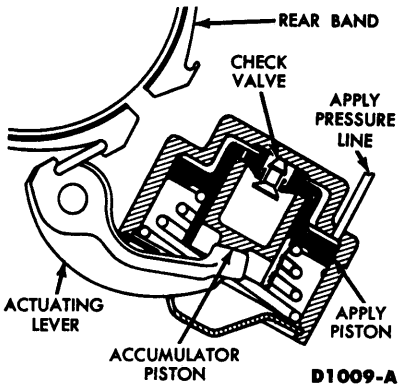

FIG. 7—Rear Servo

REAR BAND AND SERVO

The rear band fits around the planetary gear drum. One end of the band contacts the end of the band adjusting screw, and the other end connects to the rear servo.

Two rear servo pistons apply the rear band (Fig. 7). The small (fast-acting) piston, which is in direct contact with the servo lever, is located inside the large piston.

Fluid pressure against the large piston flows through a check valve to work against the small piston, which has low pressure resistance from the spring force of the rear band and whatever friction is in the servo lever and band struts. At a low apply pressure and small volume of fluid flow, the small piston moves and tightens the rear band on the pinion carrier.

When the apply pressure builds up to about 10 psi, the large piston moves against its return spring, allowing the check valve to close. When the check valve closes, the fluid in the small piston is trapped, and the apply force of the large piston is added to that of the small piston.

With full band application, the trapped fluid can bleed out through an orifice, allowing the small piston to bottom on the large piston.

4 POWER FLOWS

Table 1 lists the ratios obtained through the various power flows.

POWER FLOW—NEUTRAL

When the transmission is in neutral (Fig. 8), no gears are held or driven, and no power is transmitted to the output shaft.

POWER FLOW—FIRST GEAR, L

In first gear when the selector lever is at L, the primary sun gear is driven and the pinion carrier is held by the rear band (Fig. 8). Power is transmitted to the primary pinions, the secondary pinions, and the internal gear, driving the internal gear in the same direction as the primary sun gear. The secondary sun gear turns free in the reverse direction and has no effect on the gear train.

POWER FLOW—FIRST GEAR, D1

In first gear at the D1 selector lever position, (large dot on the shift

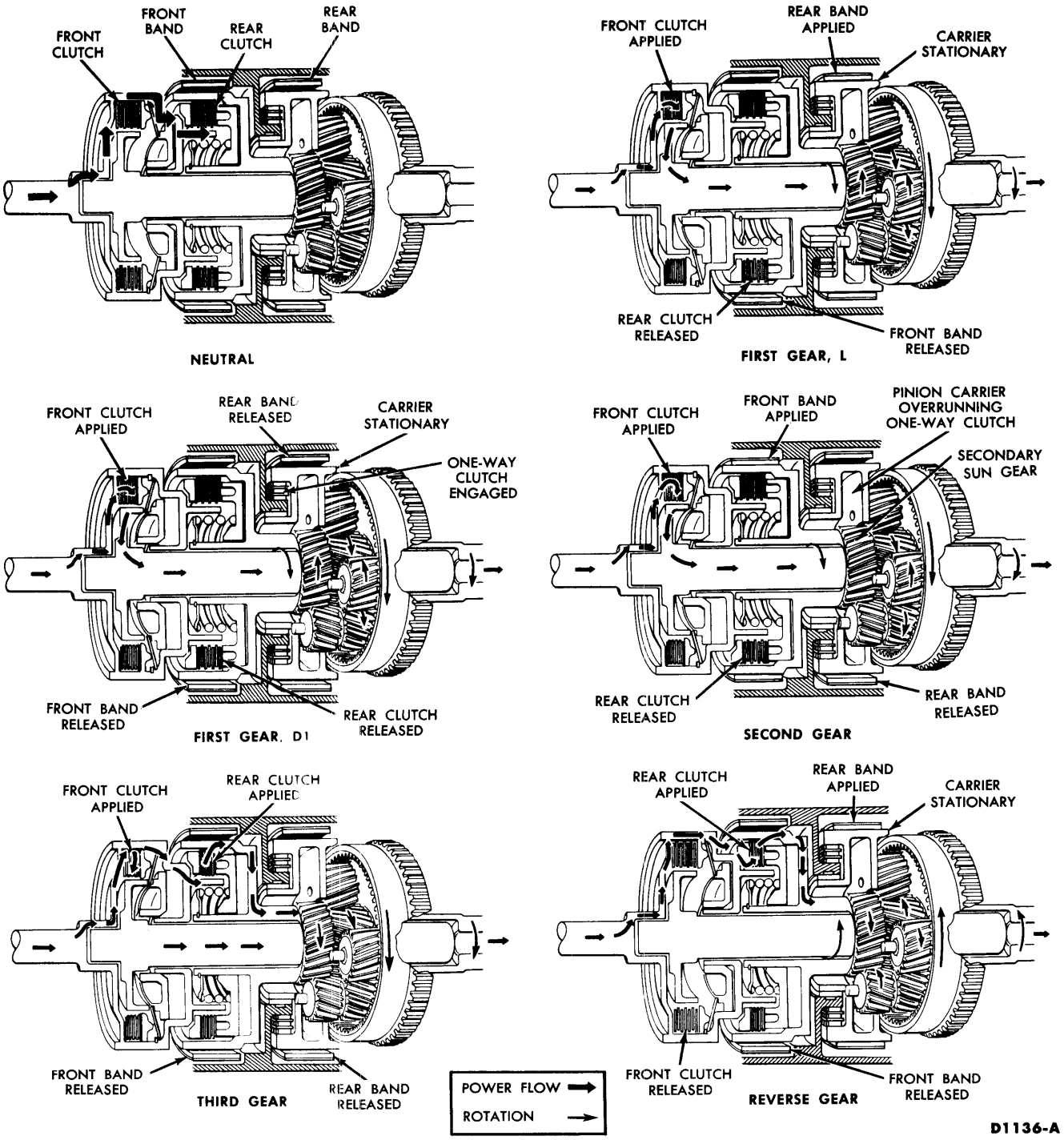

FIG. 8—Power Flows

selector dial indicator) the pinion carrier is held against rotation by the one-way clutch instead of by the rear band (Fig. 8). First gear at D1 is the only gear that uses the one-way clutch.

POWER FLOW—SECOND GEAR

Second gear ratio is obtained by driving the primary sun gear and holding the secondary sun gear (Fig. 8). The primary pinions drive the secondary pinions, causing them to "walk" around the secondary sun gear and to carry the internal gear and output shaft around with them.

POWER FLOW—THIRD GEAR

In third gear, the primary and secondary sun gears are locked together and driven as a unit (Fig. 8). Therefore, the pinions cannot rotate and the entire planetary train revolves as a unit, which causes the output shaft to rotate at the same speed as the turbine shaft.

POWER FLOW—REVERSE GEAR

Reverse gear is obtained by driving the secondary sun gear and hold-

ing the pinion carrier (Fig. 8). The secondary pinions drive the internal gear in the reverse direction. The primary sun gear and the primary pinions rotate freely and have no effect on the gear train.

POWER FLOW— PARK POSITION

When the selector lever is in the P (park) position, the parking pawl engages the external teeth on the internal gear to lock the internal gear and output shaft to the case. This locks the rear wheels to prevent movement of the car.

TABLE 1—Cruise-O-Matic Gear Ratios

Gear	Selector Lever Position	Clutch Applied	Band Applied	Gear Ratio: 1
Neutral	N	None	None	—
First	Drive (Large Dot) or L	Front	Rear*	2.40
Second	Drive	Front	Front	1.47
Third	Drive	Front and Rear	None	1.00
Reverse	R	Rear	Rear	2.00

*In first gear Drive, the planet carrier is held against rotation by the one-way clutch.

5 HYDRAULIC CONTROL SYSTEM OPERATION

PRESSURE PUMPS

The front pump, driven by the converter impeller, delivers fluid pressure to the hydraulic control system whenever the engine runs. The rear pump, driven by the transmission output shaft, delivers fluid pressure to the control system when the car moves forward.

Both pumps deliver fluid pressure to the control pressure regulator and control valve body. A regulated control pressure is available at the control valve body whenever the engine is running or the car is moving forward above approximately 15 mph.

CONTROL PRESSURE AND COMPENSATOR PRESSURE

Control pressure is regulated by the spring-loaded control pressure regulator valve (Fig. 9). It is adjusted to engine torque, road speed, and selector lever position.

To accomplish this, compensator pressure under various conditions is adjusted by throttle pressure (engine torque), governor pressure (road speed), or selector lever position. Compensator pressure, in turn, adjusts control pressure.

In the P, R, and L selector lever positions, the compensator valve is locked-out by rear servo apply pressure. In these positions, control pressure is regulated by the regulator valve spring and engine speed.

CONVERTER PRESSURE

Like control pressure, converter pressure is regulated by the converter pressure regulator valve spring and is adjusted to driving conditions by compensator pressure and selector lever positions.

THROTTLE PRESSURE

Throttle pressure adjusts the transmission operation to engine torque. Throttle pressure is produced from control pressure by the throttle valve. The throttle valve is controlled by a spring-loaded vacuum diaphragm unit mounted on the rear of the transmission case (Figs. 1 and 9).

The vacuum diaphragm is actuated by the engine intake manifold vacuum, working against spring pressure. When the vacuum is higher than 16-13.7 inches Hg, the diaphragm moves against the spring pressure and moves the push rod away from the throttle valve to cut off the throttle pressure. As the engine throttle is advanced, manifold vacuum will fall below 16-13.7 inches Hg. As the vacuum drops, the spring loaded diaphragm moves the push rod to open the throttle valve and increase the throttle pressure.

THROTTLE PRESSURE BOOST VALVE

To compensate for the slight manifold vacuum changes with throttle movements beyond about 50° carburetor valve opening, a throttle pressure boost valve comes into operation. At 51 psi throttle pressure, the spring-loaded boost valve (Fig. 9) comes into balance. Throttle pressure below 51 psi cannot move the boost valve against spring force plus throttle pressure force acting at the boost valve plug. Below 51 psi, therefore, throttle pressure will flow through the boost valve without interference.

Throttle pressures above 51 psi will move the boost valve to the left (Fig. 9). This movement will first cut off throttle pressure flow to the shift valves and coasting control valve, and it will then open a passage to permit the new boosted throttle pressure to flow to the shift valves and the coasting control valve. Throttle pressure will continue to work against the right-hand end of the boost valve. For each pound of increase in throttle pressure (above 51 psi), the boosted throttle pressure will increase about three pounds.

GOVERNOR PRESSURE

Governor pressure is produced from control pressure by the valve in the governor body which rotates at output shaft speed.

The governor valve is a balanced valve. It is balanced between centrifugal force acting on the governor valve plus governor spring force and governor pressure force (Fig. 9). Governor pressure is, therefore, proportional to road speed.

TRANSITION VALVE

The transition valve controls the front servo apply pressure flow.

In the D1 range, the transition valve blocks front servo apply pressure flow, until the 1-2 valve is closed by governor pressure.

In the D2 range, (small dot to the right of N) the transition valve permits front servo apply pressure to flow through it at all times.

1-2 SHIFT VALVE

The 1-2 shift valve controls the 1-2 upshift in the D1 range. On the

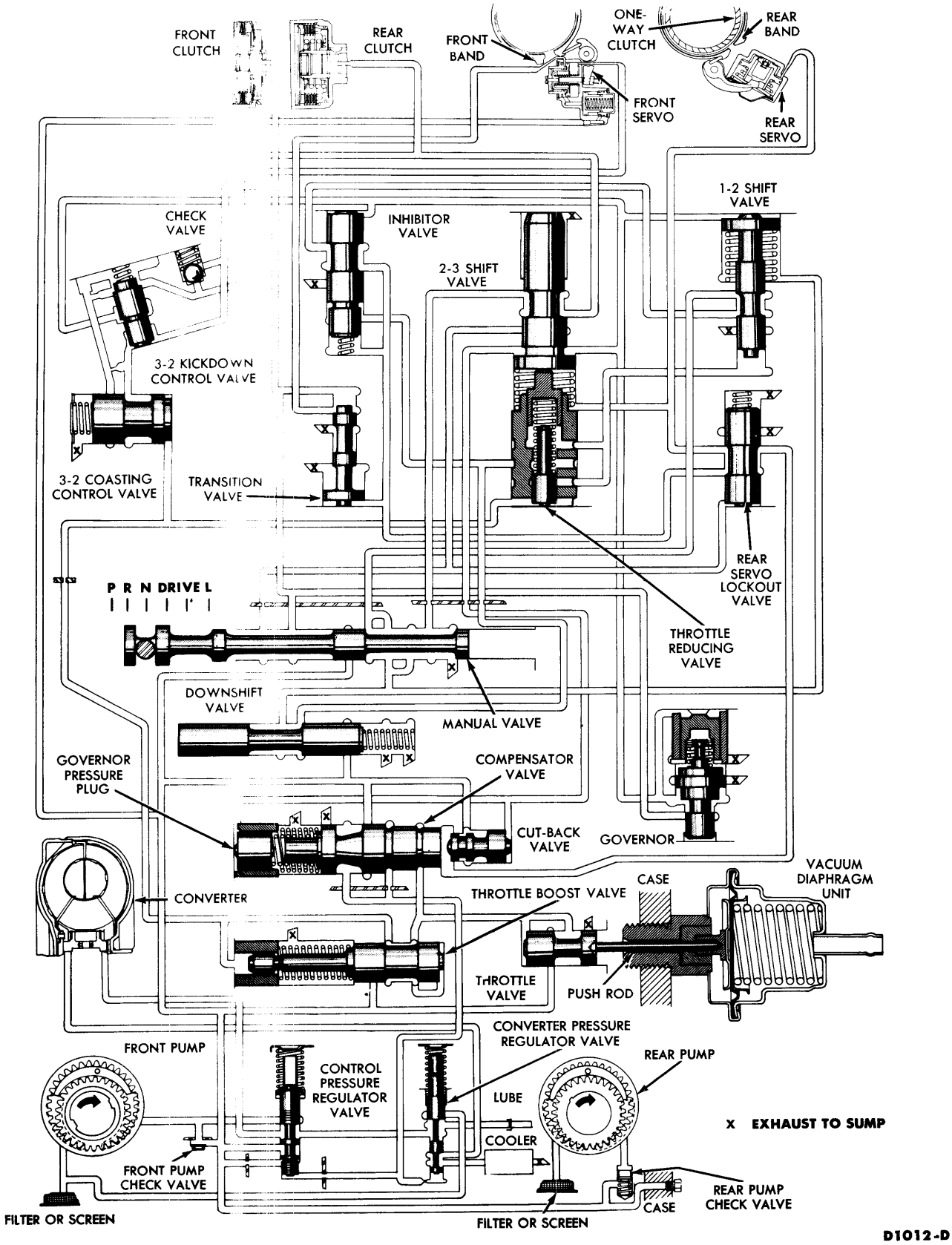

FIG. 9—Hydraulic Control System—Neutral Position

2-1 downshift, either manual (shift to L) or kickdown, the 1-2 shift valve controls the shift only within the road speed range permitted by the inhibitor valve.

The 1-2 valve is held in its rest (open) position by a spring. It is closed by governor pressure. Under various driving conditions, governor pressure is opposed by spring force plus reduced throttle and reduced boosted throttle pressures, and control pressure.

REAR SERVO LOCKOUT VALVE

The rear servo lockout valve blocks control pressure flow to the rear servo (rear servo apply pressure) in the D1 and D2 ranges.

SHIFT VALVE PLUG PRESSURE

Before throttle pressure or boosted throttle pressure is admitted to the front face of the 2-3 shift valve, it must open a passage past the spring-loaded shift valve plug.

Approximately 20 psi throttle pressure is required to move the plug against its spring far enough to open the passage. Once past the plug, throttle pressure will work on the spring end of the plug and exert a force to cut off throttle pressure flow past the plug. In this case, the plug becomes a balanced valve, wherein, the plug is balanced between throttle pressure force on the one end and spring force plus throttle pressure force on the other end. The pressure past the plug will, therefore, be reduced.

2-3 SHIFT VALVE

The 2-3 shift valve controls the 2-3 upshift and the 3-2 downshift. The valve is held in its rest (closed) position by springs. It is opened by governor pressure. Under various driving conditions, governor pressure is opposed by spring force plus throttle or boosted throttle pressures, and control pressure.

INHIBITOR VALVE

The inhibitor valve prevents a 2-1 downshift, either manual or kickdown, at excessive road speeds.

The inhibitor valve is held in its rest (open) position by a spring. It is closed by governor pressure. Under various driving conditions, governor pressure is opposed by spring force plus control pressure.

3-2 COASTING CONTROL VALVE

The 3-2 coasting control valve operates in the front servo release passage.

During a 3-2 closed-throttle downshift in D2 range, the valve is positioned by its spring so that front servo release pressure must exhaust slowly through an orifice. This slow exhaust of release pressure provides a slow front band application.

During a partial-to-full throttle 3-2 downshift, the 3-2 coasting control valve is positioned by throttle pressure or boosted throttle pressure so that front servo release pressure can exhaust rapidly to provide a rapid front band application.

DOWNSHIFT VALVE

The downshift valve is in the control valve upper body. The inner downshift lever contacts one end of the spring-loaded down-shift valve.

Control pressure is directed to a land of the valve. Linkage is connected between the accelerator pedal and the downshift lever. The downshift valve is moved to open a passage to direct control pressure to the shift valves and the inhibitor valve, when the accelerator pedal is depressed through the detent (Fig. 9).

3-2 DOWNSHIFT CONTROL VALVE

The 3-2 downshift control valve operates in the front servo release pressure passage between the 2-3 valve and the front servo. A check valve is installed parallel with the downshift valve in the same passage so that release pressure flow to the servo by-passes it.

The downshift valve controls the rate of front servo release pressure exhaust flow from the servo, and thereby the rate of front band application.

The 3-2 downshift control valve eliminates the possibility of a runaway condition in the transmission during a 3-2 kickdown at low car speeds (about 25 mph). It also eliminates the possibility of a tie-up during the same shift at higher speeds (50 mph and more).

HYDRAULIC CONTROL SYSTEM—NEUTRAL

The manual valve at N selector lever position blocks the fluid flow to both clutches and both bands. With no fluid pressure in the clutches or servos, the clutches and bands are released by spring pressure, preventing power being transmitted to the transmission output shaft.

Neutral operation of the transmission keeps control pressure up to its proper value, maintains a full torque converter, lubricates the transmission, and maintains a flow of fluid through the cooling system.

HYDRAULIC CONTROL SYSTEM—D1, FIRST GEAR

When the selector lever is moved from N to D1, the manual valve opens three passages to control pressure. From left to right (Fig. 9), the first passage admits control pressure to supply the 2-3 valve and close the rear servo lockout valve. The second passage admits control pressure to apply the front clutch, supply the governor and transition valve. The third passage admits control pressure to flow through the 1-2 and inhibitor valves and close the transition valve.

With the front clutch applied, the primary sun gear tries to drive the pinion carrier in a counterclockwise direction. Counterclockwise rotation at the pinion carrier is prevented by the one-way clutch. With the front clutch applied and the pinion carrier held, the transmission is in first gear.

HYDRAULIC CONTROL SYSTEM—D1, SECOND GEAR

The 1-2 shift occurs when governor pressure force on the 1-2 shift valve overcomes shift plug pressure and spring forces. The 1-2 valve moves inward, exhausting the fluid which holds the transition valve closed. The transition valve opens and admits control pressure to apply the front band.

The front clutch remains on, and the front band applies to put the transmission in second gear.

HYDRAULIC CONTROL SYSTEM—D1, THIRD GEAR

The 2-3 shift occurs when governor pressure force overcomes spring and shift plug pressure force at the 2-3 shift valve. When the shift valve

opens, control pressure flows through it to apply the rear clutch and release the front band. With both clutches applied, the transmission is in third gear.

HYDRAULIC CONTROL SYSTEM—D2, SECOND GEAR

When the manual valve is at the D2 selector lever position, control pressure to the 1-2 shift valve is cut off. This condition permits control pressure to flow through the transition valve to apply the front band.

With the front clutch and the front band applied, the transmission operates in second gear.

HYDRAULIC CONTROL SYSTEM—D2, THIRD GEAR

Operation in D2 range, third gear is the same as in D1 range, third gear except that the closed throttle downshift is from third to second in D2 instead of from third to first as in D1.

HYDRAULIC CONTROL SYSTEM—D1 AND D2, 3-2 KICKDOWN

When the accelerator pedal is depressed through the detent, the downshift valve opens a passage that admits control pressure behind the 2-3 shift plug to oppose governor pressure. If the transmission is in high and road speed is below 56-64 mph, the 2-3 valve will be forced closed against governor pressure. When the 2-3 valve closes, control pressure which has been applying the rear clutch and releasing the front band is exhausted. The apply pressure that was in the front servo in third gear is now free to apply the front band. As soon as the front band applies, the transmission is in second gear.

HYDRAULIC CONTROL SYSTEM—L, FIRST GEAR

In L range, first gear, control pressure is directed by the manual valve to apply the front clutch and rear band. Control pressure is also directed by the manual valve to lock the 1-2 and 2-3 shift valves in their closed positions. Since neither shift valve can move, the transmission will stay in first gear regardless of throttle position or road speed.

HYDRAULIC CONTROL SYSTEM—REVERSE

When the manual valve is shifted into reverse, control pressure is directed to apply the rear clutch and rear band. Governor supply pressure is cut off by the manual valve; hence, the transmission cannot shift automatically.

PART 5-2 LUBRICATION AND ADJUSTMENTS

Section		Page
1	Lubrication	5-10
2	Control Linkage Adjustments	5-10
3	Band Adjustments	5-11

1 LUBRICATION

TRANSMISSION FLUID RECOMMENDATIONS

Ford Automatic Transmission Fluid C1AZ-19582-A is recommended for use in Cruise-O-Matic transmissions. Substitute fluids or oils may affect the operation of the transmission.

Oil-soluble red dye, useful in detecting transmission fluid leaks, can be added to the fluid without harmful effects to the transmission.

TRANSMISSION FLUID LEVEL CHECK

The transmission fluid level should be checked at 6000-mile intervals.

1. Make sure the car is standing level, and then firmly apply the parking brake.

2. Run the engine at normal idle speed. If the transmission fluid is cold, run the engine at fast idle speed (about 1200 rpm) until the engine reaches its normal operating temperature. When the engine is warm, slow it down to normal idle speed.

3. Shift the selector lever through all positions, and place the lever at P.

4. Clean all dirt from the transmission fluid dipstick cap before removing the dipstick from the filler tube.

5. Pull the dipstick out of the tube, wipe it clean, and push it all the way back into the tube.

6. Pull the dipstick out of the tube again, and check the fluid level. If necessary, add fluid through the filler tube to raise the fluid level to the F (full) mark on the dipstick. **Do not overfill.**

TRANSMISSION FLUID DRAIN AND REFILL PROCEDURE

Normal maintenance and lubrication requirements do not require periodic automatic transmission fluid changes.

If a major failure has occurred within the transmission (such as a clutch, band, or bearing), the transmission will have to be removed for service. At this time the converter must be thoroughly flushed to remove any dirt.

When filling a dry transmission and converter, install 6 quarts of fluid. Start the engine; shift the selector lever as in step 7 below; check and add fluid as necessary.

The following procedure is to be used when a partial drain and refill is performed due to a front band adjustment or minor service.

1. Disconnect the fluid filler tube from the transmission oil pan.

2. When the fluid has stopped draining from the transmission and converter, remove and thoroughly clean the oil pan. **If the filter is clogged or a clutch or band has failed, the filter must be replaced. It cannot be cleaned.** Discard the oil pan gasket.

3. Place a new gasket on the oil pan; install the filter and pan on the transmission.

4. Connect the filler tube to the oil pan, and tighten the fitting securely.

5. Add 3 quarts of fluid to the transmission through the filler tube.

6. Run the engine at idle speed for about 2 minutes, and then at fast idle speed (about 1200 rpm) until it reaches its normal operating temperature. **Do not race the engine.**

7. Shift the selector lever through all the positions, place it at P, and check the fluid level. If necessary, add enough fluid to the transmission to raise the level to the F (full) mark on the dipstick. **Do not overfill.**

THROTTLE AND DOWNSHIFT LINKAGE

Lubricate the throttle linkage with 10W engine oil. Lubricate the lower pivot point of the downshift rod with CIAZ-19590-A moly lube (ball joint grease).

2 CONTROL LINKAGE ADJUSTMENTS

The transmission control linkage adjustments should be performed in the order in which they appear in this section of the manual.

THROTTLE AND DOWNSHIFT LINKAGE ADJUSTMENT

1. Apply the parking brake, and place the selector lever at N.

2. Run the engine at normal idle speed. If the engine is cold, run the engine at fast idle speed (about 1200 rpm) until it reaches normal operating temperature. When the engine is warm, slow it down to normal idle speed.

3. Connect a tachometer to the engine.

4. Adjust engine idle speed to specified idle rpm with the transmission selector in D1 or D2.

The carburetor throttle lever must be against the idle adjusting screw (Fig. 1) at specified idle rpm in D1 or D2.

5. After the engine idle speed has been properly adjusted, stop the en-

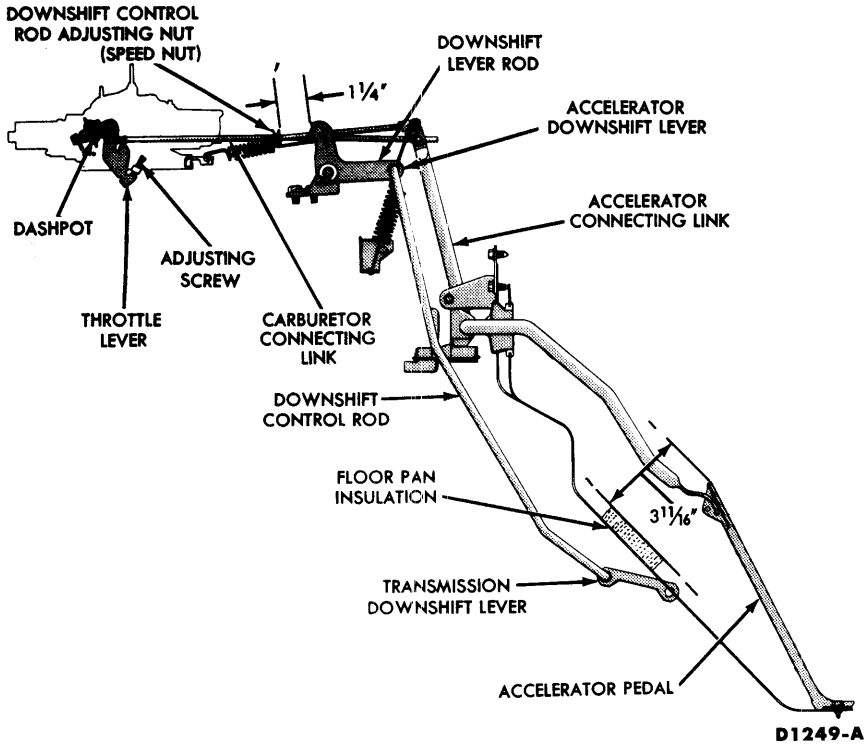

FIG. 1—Throttle and Downshift Linkage

gine and adjust the anti-stall dashpot clearance.

Check the clearance between the dashpot plunger and the throttle lever. Bottom the dashpot plunger against its spring, and then adjust the clearance between the bottomed plunger and the throttle lever to specification. Check the position of the fast idle cam. It must be in the hot position.

6. Adjust the accelerator pedal height (Fig. 1) by disconnecting the carburetor connecting link at the carburetor and turning in or out as necessary.

7. Position the speed nut, on the downshift lever rod, 1¼-inches from the forward face of the bushing in the downshift lever.

8. If shift problems exist after linkage adjustments, see Part 5-3

MANUAL LINKAGE ADJUSTMENT

1. With the engine stopped, loosen the nut at the lower end of the manual shift rod on the transmission shift lever.

2. Position the manual selector lever so that the pointer is down against the steering column stop in the D1 position. **The large green dot on the shift selector indicator is the D1 position (Fig. 2).**

3. Move the shift lever on the transmission to the D1 detent position (second from the bottom).

4. Tighten the nut on the shift rod and shift lever.

5. Check the pointer alignment for all positions of the selector lever and reset if necessary.

STARTER NEUTRAL SWITCH ADJUSTMENT

Check the starter circuit in all selector lever positions. The circuit must be open in all positions except N and P.

To adjust the starter neutral switch, loosen the screws that attach the switch to the steering column (Fig. 3). Position the switch so that the starter circuit is closed when the selector lever is at N and P.

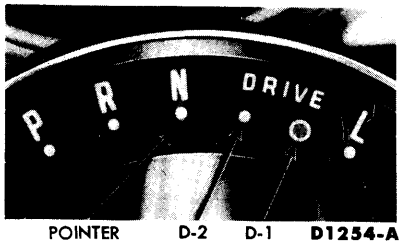

FIG. 2—Shift Selector Positions

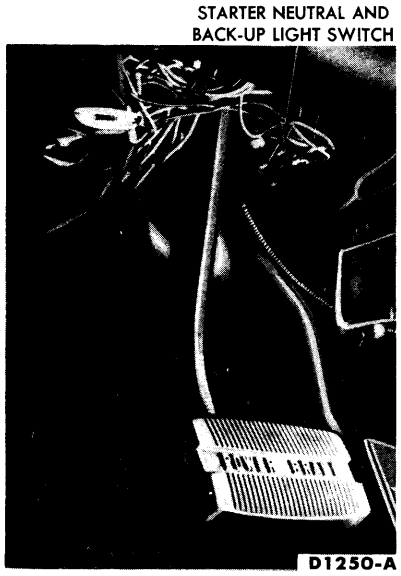

FIG. 3—Starter Neutral and Back-Up Light Switch

3 BAND ADJUSTMENTS

FRONT BAND ADJUSTMENT

1. Disconnect the fluid filler tube from the oil pan, and drain the fluid from the transmission. **If the same fluid is to be used again in the transmission after the band adjustment, filter the fluid through a 100-mesh screen as it drains from the transmission. Make sure that the container is clean. Re-use the fluid only if it is in good condition.**

2. Remove and thoroughly clean the oil pan. **Do not attempt to clean the filter. If dirty, install a new one.** Discard the oil pan gasket.

3. Loosen the front servo adjusting screw locknut two full turns with a 9/16-inch wrench. Check the adjust-

ing screw for free rotation in the actuating lever after the locknut is loosened, and free the screw if necessary.

4. Pull the adjusting screw end of the actuating lever away from the servo body, and insert the adjusting tool gauge block (Fig. 4) between the servo piston stem and the adjusting screw.

5. Install the socket handle on the 9/16-inch socket. Insert the T-handle extension through the socket handle and socket, and install the screwdriver socket on the T-handle extension. Place the tool on the adjusting screw so that the screwdriver socket engages the screw and the 9/16-inch socket engages the locknut. With a torque wrench on the T-handle extension, tighten the adjusting screw to 10 in-lbs torque, and then back off the screw exactly one full turn. **Severe damage may result to the transmission if the adjusting screw is not backed off exactly one full turn.**

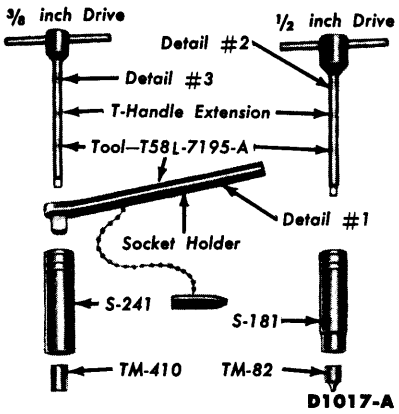

FIG. 4—Front and Rear Band Adjusting Tools

6. Hold the adjusting screw stationary, and torque the locknut to specification.

7. Remove the gauge block from the transmission.

8. Place a new gasket on the oil pan; install the filter and pan on the transmission.

9. Connect the filler tube to the oil pan and tighten.

10. Add 3 quarts of transmission fluid. Run the engine for 2 minutes. Place selector lever in P position and check fluid level. Add fluid if necessary.

REAR BAND ADJUSTMENT

1. Remove the console and the right side heater duct flow director (Fig. 5) to expose the access hole, and then remove the cover from the hole. Part 11-2 may be helpful in removing the console.

2. Wipe all dirt from the rear band adjusting screw threads, and oil the threads.

3. Place the socket holder on the 3/4-inch socket (Fig. 4.) Insert the T-handle extension through the handle and socket. Place the 5/16-inch 8-point socket on the extension. Place a torque wrench on the T-handle extension.

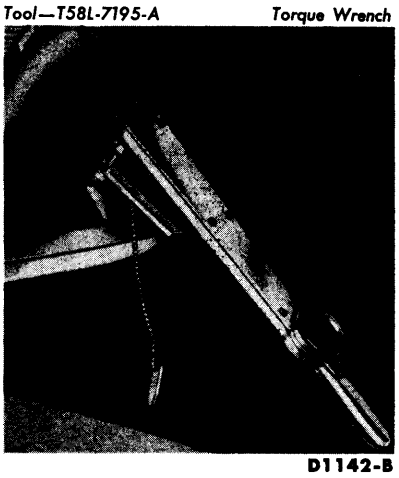

FIG. 5—Rear Band Adjustment

4. Insert the assembled tool in the access hole so that it engages the adjusting screw and the locknut.

5. Loosen the adjusting screw locknut.

6. Torque the adjusting screw to specification.

7. Remove the torque wrench from the T-handle extension and back off the adjusting screw exactly 1½ turns. **Severe damage may result to the transmission if the adjusting screw is not backed off exactly 1½ turns.**

8. Hold the adjusting screw stationary, and torque the locknut to specification.

9. Install the access hole cover. Replace the front console and the heater duct flow director.

PART 5-3 TROUBLE SHOOTING

Section		Page
1	Diagnosis Guide	5-13
2	Preliminary Checks	5-14
3	Performance Checks	5-17

1 DIAGNOSIS GUIDE

The Cruise-O-Matic Diagnosis Guide lists the most common trouble symptoms that may be found and gives the items that should be checked to find the cause of the trouble. In most cases, only the general locations of the trouble are given, and the exact causes will have to be determined by examination.

Conditions of improper operation, noise, and external fluid leakage are listed in the Cruise-O-Matic diagnosis Guide. Opposite each condition are the probable causes, arranged in a logical sequence which should be followed for quickest results. The letter symbols are explained in the Key (next page). If items A, B, C, K, and the stall test have been checked, they need not be repeated.

Cruise-O-Matic Diagnosis Guide

Trouble Symptom	Items to Check	
	Transmission in Car	Transmission Out of Car
Rough Initial Engagement in D1 or D2	K B W F E	
1-2 or 2-3 Shift Points Incorrect	A B C D W E L	
Rough 2-3 Shift	B G F E J	
Engine Overspeeds on 2-3 Shift	B G E	
No 1-2 or 2-3 Shift	D E C	b c f
No 3-1 Shift	K B E	
No Forced Downshifts	L W E	
Runaway Engine on Forced Downshift	G F E J	c
Rough 3-2 or 3-1 Shift at Closed Throttle	K B E	
Creeps Excessively in D1 or D2	K	
Slips or Chatters in First Gear	A B W F E	a c f i
Slips or Chatters in Second Gear	A B G W F E J	a c
Slips or Chatters in R	A H W F E I	b c f
No Drive in D1	C E	i
No Drive in D2	G E R	a c f
No Drive in L	C H I E R	c f
No Drive in R	H I E R	b c f
No Drive in Any Selector Lever Position	A C W F E R	c
Lockup in D1	C I J	b g c
Lockup in D2	C H I	b g c
Lockup in L	G J E	b g c
Lockup in R	G J	a g c i
Parking Lock Binds or Does Not Hold	C	g
Engine Does Not Start by Pushing Car	A C F E	e c
Transmission Overheats	O F	n
Maximum Speed Too Low, Poor Acceleration		n
Transmission Noisy in N	F	j a d
Transmission Noisy in First, Second, or Third Gear	F	h a b d
Transmission Noisy in R	F	h a b d
Transmission Noisy in P	F	d
Transmission Noisy During Coast at 30-20 mph in N, Engine Stopped		e
Fluid Leak at Converter Housing	M	j m p
Fluid Leak at Transmission Oil Pan	N	
Fluid Leak at Left Side of Case	P Q T	
Fluid Leak at Right Side of Case	Q T O	
Fluid Leak at Front of Extension Housing	S V	
Fluid Leak at Rear of Extension Housing	U	
Fluid Leak at Speedometer Driven Gear Adapter	X	

Key to Diagnosis Guide

A. Fluid Level	M. Converter Drain Plugs
B. Vacuum Diaphragm Unit or Tubes	N. Oil Pan Gasket, Drain Plug or Tube
C. Manual Linkage	O. Oil Cooler and Connections
D. Governor	P. Manual or Throttle Lever Shaft Seal
E. Valve Body	Q. ⅛-inch Pipe Plug in Side of Case
F. Pressure Regulator	R. Perform Air-Pressure Check
G. Front Band	S. Extension Housing to Case Gaskets and Lockwashers
H. Rear Band	T. Center Support Bolt Lockwashers
I. Rear Servo	U. Extension Housing Rear Oil Seal
J. Front Servo	V. Governor Inspection Cover Gasket
K. Engine Idle Speed	W. Perform Control Pressure Check
L. Downshift Linkage	X. Speedometer Driven Gear Adapter Seal
a. Front Clutch	h. Planetary Assembly
b. Rear Clutch	i. Planetary One-Way Clutch
c. Leakage in Hydraulic System	j. Engine Rear Oil Seal
d. Front Pump	m. Front Pump Oil Seal
e. Rear Pump	n. Converter One-Way Clutch
f. Fluid Distributor Sleeve in Output Shaft	p. Front Pump to Case Gasket
g. Parking Linkage	

2 PRELIMINARY CHECKS

The following preliminary checks should be made on a Cruise-O-Matic transmission before proceeding with any other trouble-shooting checks.

TRANSMISSION FLUID LEVEL CHECK

Check the transmission fluid level, using the procedure given in Part 5-2. A low fluid level can affect the operation of the transmission, and may indicate fluid leaks that could cause transmission damage.

A fluid level that is too high will cause the fluid to become aerated. Aerated fluid will cause a low control pressure and the aerated fluid may be forced out the vent tube.

TRANSMISSION FLUID LEAKAGE CHECKS

Check the speedometer cable connection at the transmission. Replace the rubber seal if necessary.

Inspect the governor inspection plate for leakage. Install a new gasket if needed.

Leakage at the oil pan gasket often can be stopped by tightening the attaching bolts to not more than 10-13 ft-lbs torque. If necessary, replace the gasket.

Check the fluid filler tube connection at the transmission oil pan. If leakage is evident here, tighten the fitting.

Check the fluid lines and fittings between the transmission and the cooler in the radiator tank for looseness, wear, or damage. If leakage cannot be stopped by tightening a fitting, replace the leaking parts.

Check the engine coolant in the radiator. If transmission fluid is present in the coolant, the cooler in the radiator tank is probably leaking.

The cooler can be further checked for leaks by disconnecting the lines at the cooler fittings and applying 5 psi air pressure to the fittings. If the cooler is leaking and will not hold this pressure, the radiator must be replaced. **The cooler cannot be replaced separately.**

If leakage is found at either the downshift lever shaft or the manual lever shaft, replace the affected seal.

Inspect the hexhead pipe plug on the left side of the transmission case at the front. If the plug leaks, tighten the plug to the specified ft-lbs torque. If tightening does not stop the leak, replace the plug.

If the converter drain plugs leak, remove the plugs with a sixpoint wrench. Coat the threads with FoMoCo Perfect Seal Sealing Compound or its equivalent, and install the plugs. Tighten the drain plugs to the specified torque. **Fluid leakage from the converter housing may be caused by engine oil leaking past the rear main bearing or from oil gallery plugs. Be sure to determine the exact cause of the leak.**

Oil-soluble aniline or fluorescent dyes premixed at the rate of ½ teaspoon of dye powder to ½ pint of transmission fluid have proved helpful in locating the source of the fluid leakage. Such dyes may be used to determine whether an engine oil or transmission fluid leak is present, or if the fluid in the oil cooler leaks into the engine coolant system. An ultraviolet light must be used with the fluorescent dye solution.

ENGINE IDLE SPEED CHECK

Check and, if necessary, adjust the engine idle speed, using the procedure given in Part 5-2.

If the idle speed is too low, the engine will run rough. An idle speed that is too high will cause the car to creep when the transmission is shifted out of neutral.

ANTI-STALL DASHPOT CLEARANCE CHECK

After the engine idle speed has been properly adjusted, check the anti-stall dashpot clearance. Follow the procedure given in Part 5-2 for checking and adjusting this clearance.

MANUAL LINKAGE CHECKS

Correct manual linkage adjustment is necessary to position the man-

ual valve for proper fluid pressure direction to the different transmission components. Improperly adjusted manual linkage may cause cross-leakage and subsequent transmission failure. Refer to Part 5-2, for detailed manual linkage adjustment procedures.

AUTOMATIC SHIFTS, CONTROL PRESSURE, AND DIAPHRAGM UNIT CHECKS

When the vacuum diaphragm unit (Fig. 1) is operating properly and the downshift linkage is adjusted properly, all the transmission shifts (automatic and kickdown) should occur within the road speed limits given in Table 2.

If the automatic shifts do not occur within limits, the following procedure is suggested to separate engine, transmission, linkage, and diaphragm unit troubles.

1. Attach a tachometer and vacuum gauge to the engine.

2. Attach a pressure gauge to the control pressure outlet on the rear of the transmission (Fig. 1).

3. Firmly apply the parking brake and start the engine.

4. Adjust engine idle speed to the specified rpm in D1 or D2. If engine idle speed cannot be brought within limits by adjustment at the carburetor idle adjusting screw, check the throttle and downshift linkage for a binding condition. If the linkage is satisfactory, check for vacuum leaks in the transmission diaphragm unit and its connecting tubes and hoses. Check all other vacuum operated units (such as the power brake) for vacuum leaks.

5. At engine idle speed, read the engine vacuum gauge and the transmission control pressure gauge.

The engine vacuum gauge should read a minimum of 18.0 inches. If the vacuum gauge reading is lower than 18.0 inches, an engine problem is indicated. Repair as necessary.

The transmission control pressure should agree with Table 3. If transmission control pressure is within limits, shift the transmission into D1 or D2 and firmly apply the service brakes. Advance the throttle until the engine vacuum gauge reading falls below 16-13.7 inches. As the vacuum gauge reading passes through the 16-13.7 inches range, transmission control pressure should start to rise and continue to rise with throttle opening, until maximum control pressure for stall in D1 or D2 is obtained (Tables 1 and 3). **Caution. See STALL TEST, Part 5-3, section 2.**

In P, R and L, control pressure rise is not dependent on the diaphragm unit. When the selector lever is shifted into these positions and engine rpm is increased, control pressure should rise immediately and reach its maximum before engine speed reaches stall rpm. If the vacuum and pressure gauge readings follow the pattern described above, the diaphragm unit and transmission control pressure regulation system are operating properly.

If transmission control pressure at idle is too low, too high, fails to rise with throttle opening, or is extremely erratic, follow the procedure given under the following appropriate heading.

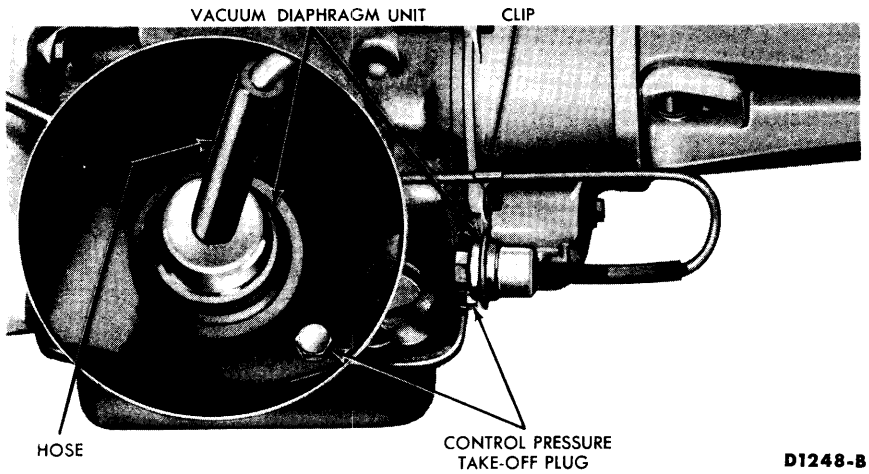

FIG. 1—Vacuum Diaphragm and Control Pressure Connecting Point

TABLE 1—Stall Speeds

Selector Lever Position	Clutch Applied	Band Applied	Engine RPM
D2	Front	Front	1800-2000
D1	Front	One-Way Clutch	
L	Front	Rear	
R	Rear	Rear	

TABLE 2—Cruise-O-Matic Shift Points - Approximate

Automatic Shift Speeds (mph)								Manual Shift Speeds (mph)
D1		D1 or D2		D1	D1 or D2	D1	D2	L
1-2 Minimum Throttle	1-2 Maximum Throttle	2-3 Minimum Throttle	2-3 Maximum Throttle	3-1 Minimum Throttle	3-2 Maximum Throttle	2-1 Maximum Throttle	3-2 Minimum Throttle	2-1
8-10	38-46	14-24	62-71	7-8	57-66	27-37	7-10	19-26

TABLE 3—Control Pressure Ranges

Manifold Vacuum "HG	Engine Speed RPM	Selector Position	Gauge Reading PSI
18 Minimum	450-475	N-D1-D2	57-72
		P-R-L	57-213
1.5 or Less	Stall	D1-D2	145-170
		R-L	201-213

CONTROL PRESSURE IS LOW

If control pressure at engine idle is low in all selector lever positions, trouble other than the diaphragm unit is indicated.

Transmission control pressure in P, R, and L is regulated entirely by the control pressure regulator valve and its spring. When control pressure at engine idle is low in all ranges, check for excessive leakage in the front pump, case, and control valve body.

CONTROL PRESSURE IS HIGH

If transmission control pressure at engine idle is too high in N, D1 and D2 (Table 3), the trouble may be in the diaphragm unit or its connecting tubes and hoses.

With the engine idling, disconnect the hose from the diaphragm unit (Fig. 1) and check the engine manifold vacuum. Hold a thumb over the end of the hose and check for vacuum. If the engine speeds up when the hose is disconnected and slows down as the thumb is held against the end of the hose, the vacuum source is satisfactory.

Stop the engine, and remove the diaphragm unit and the diaphragm unit push rod. Inspect the push rod for a bent condition and for corrosion. Install the diaphragm unit in the case to prevent fluid loss, but leave the push rod out. With the push rod removed, the diaphragm unit cannot affect transmission control pressure. Start the engine and check control pressure at engine idle in N, D1 and D2. If control pressure is still too high, the trouble is in the transmission control system. If the pressure is now within limits, the diaphragm unit was not operating properly and should be replaced.

CONTROL PRESSURE DOES NOT RISE WITH THROTTLE OPENING

If transmission control pressure does not rise in D1 and D2 as engine vacuum falls below 16-13.7 inches Hg, check the transmission's pressure rise capacity by shifting to R or L. In these positions, maximum control pressure (Table 3) should be obtained at not more than engine stall rpm.

If pressure rise is normal in R and L, remove the hose from the diaphragm unit and check the hose and tubes as given above. If the vacuum reading at the diaphragm end of the hose is 18 inches Hg or greater, change the diaphragm unit and again check for pressure rise with throttle opening in D1 and D2. If control pressure does not rise now, the trouble is in the transmission. Check for excessive leakage in those components which have control pressure in them in D1 and D2 but do not have control pressure in them in R and L.

CONTROL PRESSURE IS EXTREMELY ERRATIC

If transmission control pressure is extremely erratic in N, D1 and D2, check the diaphragm unit tubes, hoses, and diaphragm push rod as given above under **Control Pressure Is High.** If the vacuum source is satisfactory, replace the diaphragm unit and repeat the tests for transmission control pressure. If control pressure is still extremely erratic, the trouble is in the transmission. Clean and inspect the control valve body and pressure regulator.

KICKDOWN SHIFTS

With the linkage adjusted as outlined in Part 5-2, the transmission still might not downshift when it is road-tested because of an improperly shaped or otherwise defective downshift control rod. Check this rod as follows:

1. Depress the accelerator pedal to the floor, and hold it there.

2. Disconnect the downshift rod at the accelerator downshift lever (Fig. 2, Part 5-2), and firmly push the rod all the way down.

3. Prop the accelerator pedal to its wide open position and, **while holding the downshift rod all the way down,** try to connect the rod. If the connection cannot be made, the distance from the speed nut to the front of the bushing on the downshift lever may be decreased to 1 inch. If the connection cannot be made now, look for bent or worn linkage.

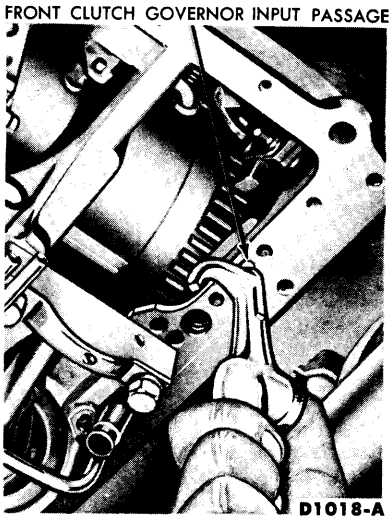

FIG. 2—Typical Front Clutch Air Check

STALL TEST

The stall test is made in D2, D1, L, or R (at full throttle only) to determine if the bands and clutches are holding properly. **While making this test, do not hold the throttle open for more than five seconds at a time, then operate the engine and transmission in neutral at 1000 rpm for 15 seconds to cool the fluid and the converter.**

Connect a tachometer, and start the engine to allow it to reach its normal temperature. Apply both the parking and service brakes.

Place the selector lever at D2, then press the accelerator to the floor. Note the engine speed. Stall speeds are given in Table 1.

In D1 (car standing still), the front clutch and the one-way clutch are engaged at all accelerator pedal positions.

In D2 (car standing still), the front clutch and front band are engaged at all accelerator pedal positions.

In L, the front clutch and rear band are applied.

In R, the rear clutch and rear band are applied.

Perform the tests under "Stator

Check," Section 3, to determine if the stator clutch is defective.

If the engine speed exceeds the maximum limits of Table 1, release the accelerator immediately because clutch or band slippage is indicated.

The band or clutch that is causing the slippage can be found by testing in another selector lever position. For example, should the transmission slip in D2 but not in D1, the probable cause is the front band.

3 PERFORMANCE CHECKS

Performance checks should be made only after all preliminary checks have been completed. If an unsatisfactory operating condition is found during these checks, stop the checks and proceed to final diagnosis and correction of trouble.

INITIAL ENGAGEMENT CHECKS

Initial engagement checks are made to determine if initial band and clutch engagements are smooth.

Run the engine until the normal operating temperature is reached. With the engine at the correct idle speed, shift the selector lever from N to D2, and from N to D1. Observe the initial band and clutch engagements. Band and clutch engagements should be smooth in all positions. Rough initial engagements in D1, D2, L or R are caused by high engine idle speed, high control pressure, faulty operation of the pressure regulator valve or of the main control valve.

SHIFT POINT CHECKS

Check the light throttle upshifts in D1. The transmission should start in first gear and shift to second at about 8 mph, and then shift to third at about 18 mph (Table 2).

While the transmission is in third gear, depress the accelerator pedal through the detent (to the floor). The transmission should shift from third to second or third to first, depending on the car speed shown in Table 2.

Check the closed throttle downshift from third to first by coasting down from about 30 mph in D1. The shift should occur at about 8 mph. A 3-2-1 shift may occur here. In first gear, D1, the car will free-wheel if the drive shaft speed in first gear is relatively higher than engine crankshaft speed.

Partial-throttle downshifts in D1 may be checked by using the service brakes as a load. With the transmission in third gear, D1, and car speed at about 30 mph, depress and hold the accelerator at a half-throttle position. At the same time, apply the service brakes to the point that road speed is slowly reduced. The third to second and then second to first shifts should occur as road speed decreases.

When the selector lever is at D2, the transmission can operate only in second and third gears. Shift points for second to third and third to second are the same in both D2 and D1.

If the transmission is in third gear and road speed is above about 28 mph, the transmission should shift to second gear when the selector lever is moved from D2 or D1 to L. When the same manual shift is made below about 25 mph, the transmission will shift from second or third to first.

STATOR CHECK

When the stall test speeds are low and **the engine is properly tuned,** converter stator clutch problems are indicated. A road test must be performed to determine the exact cause of the trouble.

If any of the following symptoms are evident, the converter assembly is defective and must be replaced.

The stall test speeds are 300 to 400 rpm below the values shown in Table 1 and the car cruises properly but has very poor acceleration.

The stall test speeds are 300 to 400 rpm below the values shown in Table 1; the car drags at cruising speeds and acceleration is poor. The stall test shows normal speeds, the acceleration is good, but the car drags at cruising speeds.

AIR PRESSURE CHECKS

A "NO DRIVE" condition can exist, even with correct transmission fluid pressure, because of inoperative clutches or bands. The inoperative units can be located through a series of checks by substituting air pressure for the fluid pressure to determine the location of the malfunction.

When the selector lever is at D2, a "NO DRIVE" condition may be caused by an inoperative front clutch or front band. A "NO DRIVE" condition at D1 may be caused by an inoperative front clutch or one-way clutch. When there is no drive in L, the difficulty could be caused by improper functioning of the front clutch or the rear band. Failure to drive in reverse range could be caused by a malfunction of the rear clutch or rear band. Erratic shifts could be caused by a malfunction of the governor.

To make the air pressure checks, drain the transmission fluid, then remove the oil pan and the control valve assembly.

The inoperative units can be located by introducing air pressure into the transmission case passages leading to the clutches, rear servo, and governor, and into the front servo apply, release, and accumulator tubes.

FRONT CLUTCH

Apply air pressure to the transmission case front clutch passage (Fig. 2). A dull thud can be heard when the clutch piston is applied. If no noise is heard, place the finger tips on the drum and again apply air pressure to the front clutch passage. Movement of the piston can be felt as the clutch is applied.

GOVERNOR

Remove the governor inspection cover from the extension housing. Apply air pressure to the front clutch passage, listen for a sharp click, and watch to see if the governor weight snaps inward (Fig. 3). Inward weight movement indicates correct governor valve operation.

REAR CLUTCH

Apply air pressure to the rear clutch passage (Fig. 4). A dull thud indicates that the rear clutch piston has moved to the applied position. If no noise is heard, place the finger tips on the rear drum and again apply air pressure to detect movement of the piston.

FRONT SERVO

Hold the air nozzle in the front servo apply tube. Operation of the

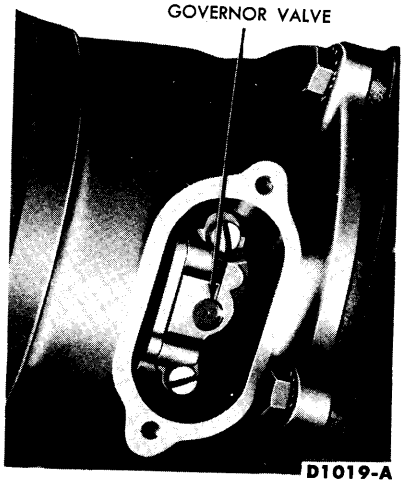

FIG. 3—Governor Valve

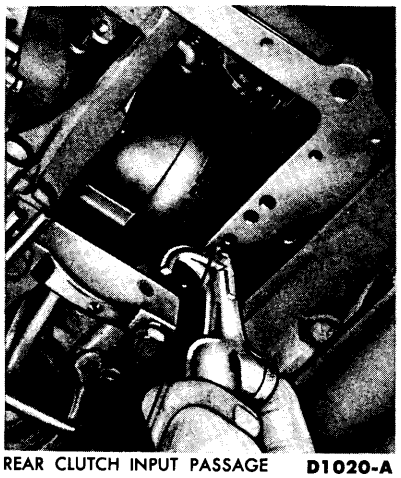

FIG. 4—Typical Rear Clutch Air Check

front servo is indicated by a tightening of the front band around the drum. Continue to apply air pressure to the front servo apply tube, and introduce air pressure into the front servo release tube. **Hold a cloth over the release tube while applying the servo to catch the spray from the release tube.** With equal pressure on each side of the front servo, the front band should release.

FIG. 5—Typical Rear Servo Air Check

REAR SERVO

Apply air pressure to the rear servo apply passage (Fig. 5). The rear band should tighten around the drum if the rear servo is operating properly.

If either servo is inoperative, remove the inoperative unit and apply air pressure directly to its passages. Proper operation of the servos indicates that the trouble is in the case passages. If the servo does not operate, disassemble, clean, and inspect it to locate the source of the trouble.

If air pressure applied to either of the clutch passages fails to operate a clutch or operates both clutches at once, remove and, with air pressure, check the fluid passages at the output shaft aluminum sleeve for correct indexing with the shaft holes. Check the primary sun gear shaft assembly passages with air pressure to detect obstructions (Fig. 6).

If the output shaft and primary sun gear shaft passages are clear, remove the clutch assemblies. Clean and inspect the malfunctioning clutch to locate the trouble.

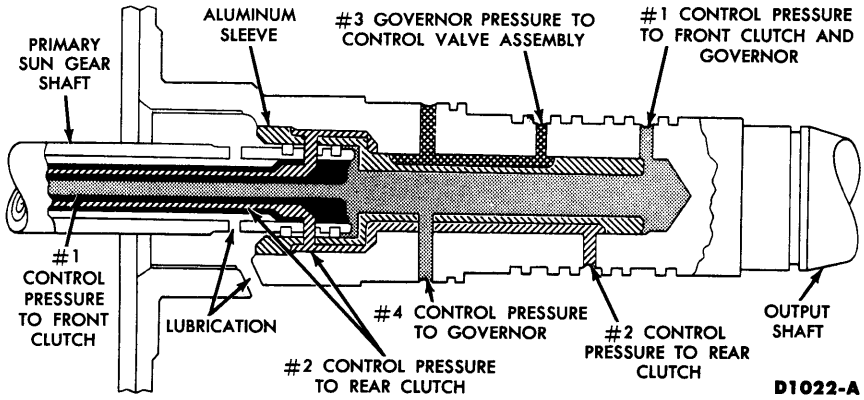

FIG. 6—Output and Primary Sun Gear Shaft Fluid Passages

PART 5-4 REPLACEMENT

Section		Page
1	Sub-Assembly Replacement—Transmission in Car	5-19
2	Transmission and Converter Replacement	5-21

1 SUB-ASSEMBLY REPLACEMENT—TRANSMISSION IN CAR

GOVERNOR REPLACEMENT

1. Raise the car so that the transmission extension housing is accessible.

2. Remove the governor inspection cover from the extension housing.

3. Rotate the drive shaft until the governor is in line with the inspection hole (Fig. 1).

4. Remove the governor valve body from the counterweight. **Do not drop the attaching bolts or the valve parts into the extension housing.**

5. Lubricate the new governor valve parts with transmission fluid. **The valve must move freely in the valve body bore and the legs on the sleeve must be inside the body to counterweight mounting surface.**

6. Install the governor valve body on the counterweight so that the valve body cover is facing rearward. Tighten the two attaching bolts securely.

7. Install the governor inspection cover and a new gasket on the extension housing. Torque the attaching screws to specification.

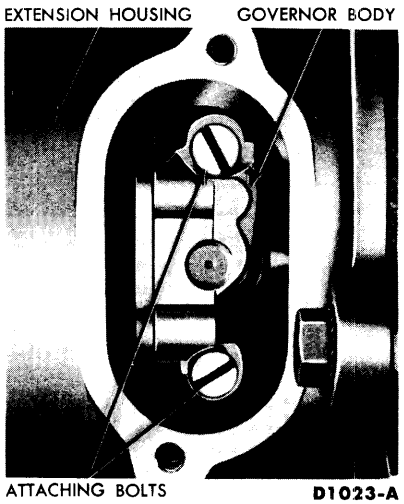

FIG. 1—Governor in Extension Housing

OIL PAN AND CONTROL VALVE BODY REPLACEMENT

1. Raise the car so that the transmission oil pan is accessible.

2. Disconnect the fluid filler tube from the oil pan, and drain the fluid from the transmission. **If the same fluid is to be used again, filter the fluid through a 100-mesh screen as it drains from the transmission. Make sure that the container is clean. Reuse the fluid only if it is in good condition.**

3. Disconnect the hose from the vacuum diaphragm unit (Fig. 1, Part 5-3). Remove the diaphragm unit, using tool FCO-24. **Do not use any tools on the diaphragm housing, such as pliers, pipe wrenches etc. Do not allow solvents to enter the diaphragm unit.** Remove the push rod.

4. Remove the oil pan and gasket, and discard the gasket.

5. Remove the fluid filter retaining clip and the filter.

6. Remove the two tubes which connect to the pressure regulator and the control valve body. **The regulator lubrication tube (Fig. 2) does not have to be removed.**

7. Loosen the front servo attaching bolts three turns.

8. Remove the three control valve body attaching bolts, and lower the valve body while pulling it off of the front servo oil tubes (Fig. 2). **Be careful not to damage the valve body or the tubes.**

9. Before installing the control valve body, check for a bent manual

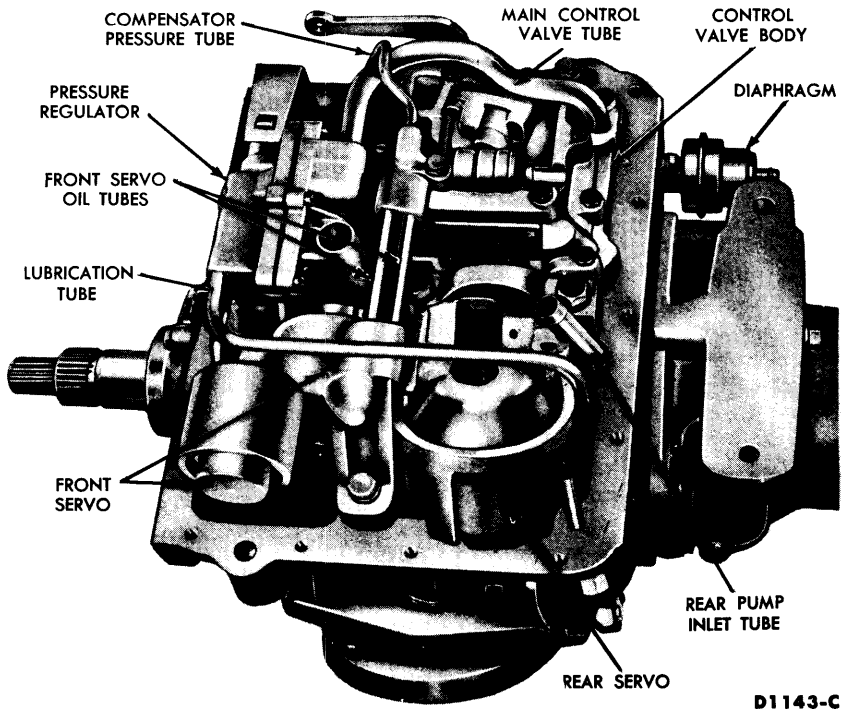

FIG. 2—Hydraulic Control System Parts

valve. This is done by rolling the valve on a flat surface.

10. Install the control valve body by aligning the front servo oil tubes with the holes in the valve body. Shift the manual lever to the L detent, and place the inner downshift lever between the downshift lever stop and the downshift valve (Fig. 26, Part 5-5). **The manual valve must engage the actuating pin in the manual detent lever.**

11. Install, but do not tighten the control valve body attaching bolts.

12. Install the two tubes to the pressure regulator and the control valve body.

13. Move the control valve body toward the center of the case as far as the attaching bolts will permit. This movement is made to take up clearance between the manual valve and the actuating pin on the manual detent lever.

14. Torque the attaching bolts to specification.

15. Turn the manual valve one full turn in each manual lever detent position. If the manual valve binds against the actuating pin in any detent position, loosen the valve body attaching bolts and move the body away from the center of the case. Move the body only enough to relieve the binding. Torque the attaching bolts and recheck the manual valve for binding.

16. Place the push rod in the front of the vacuum diaphragm unit. Turn the rod and diaphragm unit into the threaded opening of the case and torque to specification. Connect the vacuum hose.

17. Torque the front servo attaching bolt to specification.

18. Adjust the front band, following the procedure in Part 5-2.

19. Install the fluid filter.

20. Position a new oil pan gasket on the bottom of the transmission case, and install the oil pan. Torque the oil pan screws to the specified torque.

21. Connect the fluid filler tube to the oil pan, and tighten the fitting securely.

22. Fill the transmission with Ford Automatic Transmission Fluid C1AZ-19582-A, using the refill procedure given in Part 5-2. **If the fluid that was drained from the transmission is to be used again, filter the fluid through a 100-mesh screen as it is poured back into the transmission. Re-use the fluid only if it is in good condition.**

23. If the control valve body was replaced, check the downshift linkage and the manual linkage.

FRONT SERVO REPLACEMENT

1. Drain the fluid from the transmission; remove the oil pan and filter.

2. Remove the vacuum diaphragm unit and rod (Part 5-4, Section 1).

3. Remove the pressure regulator lubrication tube (Fig. 2).

4. Loosen the three control valve body attaching bolts.

5. Remove the attaching bolts from the front servo (Fig. 2), hold the strut with the fingers, and remove the servo.

6. To install the front servo, position the front band forward in the case with the ends of the band facing downward. Align the large end of the servo strut with the servo actuating lever, and align the small end with the band end.

7. Rotate the band, strut, and servo to align the anchor end of the band with the anchor in the case.

Push the servo body onto the control valve body and the pressure regulator tubes.

8. Install the attaching bolts and torque to specification.

9. Torque the control valve body attaching bolts to specification. Check the clearance between the manual valve and the manual lever actuating attaching bolt to specification. Check the clearance between the manual valve and the manual lever actuating pin as given in "Oil Pan and Control valve Body Replacement."

10. Install the pressure regulator lubrication tube (Fig. 2).

11. Adjust the front band, following the procedure in Part 5-2.

12. Install the vacuum diaphragm unit and rod.

13. Install the fluid filter and oil pan, and fill the transmission with fluid, using the procedure given in Part 5-2.

14. Adjust the manual linkage and check the downshift linkage.

REAR SERVO REPLACEMENT

1. Drain the fluid from the transmission, and remove the oil pan and fluid filter.

2. Remove the vacuum diaphragm unit and rod.

3. Remove the pressure regulator lubrication tube (Fig. 2).

4. Remove the control valve body and the two front servo oil tubes.

5. Remove the attaching bolts from the rear servo, hold the actuating and anchor struts with the fingers, and remove the servo.

6. To install the rear servo, position the servo anchor strut on the servo band, and rotate the band to engage the strut.

7. Hold the servo anchor strut in position with the fingers, position the actuating lever strut, and install the servo.

8. Install the servo attaching bolts, and torque them to specification. **The longer bolt must be installed in the inner bolt hole.**

9. Install the two front servo oil tubes and the control valve body.

Check the clearance between the manual valve and manual lever actuating pin.

10. Install the pressure regulator lubrication tube.

11. Adjust the rear band, following the procedure given in Part 5-2.

12. Install the vacuum diaphragm unit and rod.

13. Install the filter and oil pan, and fill the transmission with fluid, using the procedure given in Part 5-2.

14. Adjust the manual linkage and check the downshift linkage.

PRESSURE REGULATOR REPLACEMENT

1. Drain the fluid from the transmission; remove the oil pan and filter.

2. Remove the pressure regulator lubrication tube (Fig. 2).

3. Remove the small compensator pressure tube and the large control pressure tube from the control valve body and the pressure regulator.

4. Remove the pressure regulator spring retainer, springs, and spacer. **Maintain pressure on the retainer to prevent the springs from flying out.**

5. Remove the pressure regulator attaching bolts and washers, and remove the regulator. Leave the pressure regulator to front servo accumulator tube in the front servo body.

6. Position the replacement regulator body on the transmission case and onto the accumulator tube. Install the attaching bolts. Torque the bolts to specification.

7. Check, the converter pressure and control pressure valves to be sure the valves operate freely in the bores.

8. Install the valve springs, spacer, and retainer.

9. Install the large control pressure tube, small compensator pressure tube, and the pressure regulator lubrication tube.

10. Install the filter and the oil pan, and fill the transmission with fluid, using the procedure given in Part 5-2.

EXTENSION HOUSING BUSHING AND REAR SEAL REPLACEMENT

1. Disconnect the drive shaft from the transmission.

2. Carefully remove the seal with a tapered chisel.

3. Remove the bushing as shown in Fig. 3. **Use the bushing remover carefully so that the spline seal is not damaged.**

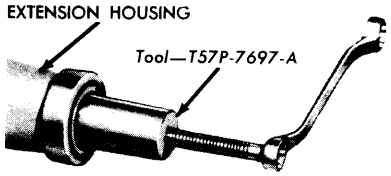

FIG. 3—Extension Housing Bushing Removal

4. When installing a new bushing use the special tool shown in Fig. 4

5. Before installing a new seal, inspect the sealing surface of the universal joint yoke for scores. If scores are found, replace the yoke.

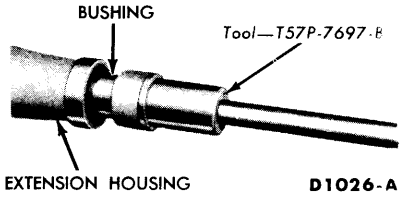

FIG. 4—Extension Housing Bushing Installation

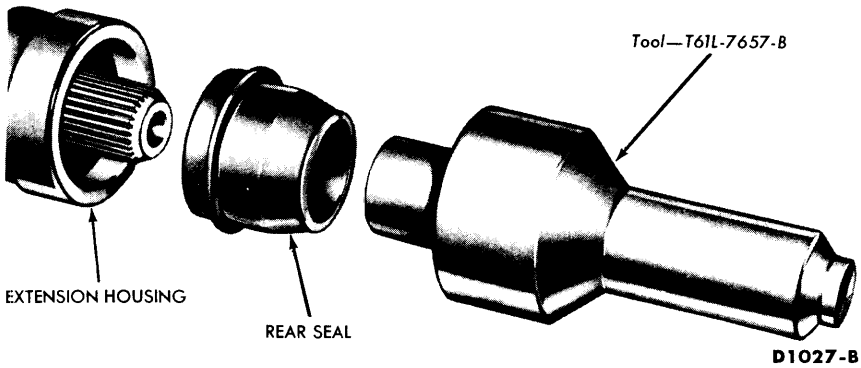

FIG. 5—Extension Housing Rear Seal Installation

6. Inspect the counterbore of the housing for burrs. Polish off all burrs with crocus cloth.

7. Drive the seal into the housing with the tool shown in Fig. 5. The seal should be firmly seated in the bore. Coat the inside of the spline and seal with B8A-19589-A lube. Install the drive shaft.

OIL COOLER FLUSHING PROCEDURE

When a clutch or band failure or other internal trouble has occurred in the transmission, any metal particles, clutch plate or band material that may have been carried into the cooler should be removed from the system by flushing the cooler before the transmission is put back into service.

1. Disconnect the fluid return from the rear of the transmission case.

2. Start the engine and drain about two quarts of fluid from the cooler into a pan. Discard the drained fluid. If there is no fluid flow or the fluid does not flow freely from the return line, shut off the engine and disconnect both lines at the cooler and transmission.

3. Use an air hose (with not more than 100 psi air pressure) and reverse flush the lines and the cooler.

4. Connect both lines at the cooler, and the pressure line at the transmission.

5. Start the engine and check the fluid flow. If the fluid flows freely, connect the return line at the transmission and fill the transmission with new fluid to the specified level. If there is no fluid flow or if the flow is restricted, replace the radiator. **Do not attempt to correct cooler or cooling line leaks by closing off the lines.**

OIL COOLER TUBE REPLACEMENT

When fluid leakage is found at the oil cooler, the entire radiator must be replaced. **The oil cooler cannot be removed from the radiator for replacement.**

When one or more of the oil cooler steel tubes must be replaced, each replacement tube must be fabricated from the same size steel tubing as the original line.

Using the old tube as a guide, bend the new tube as required. Add the necessary fittings, and install the tube.

After the fittings have been tightened, add fluid as needed, and check for fluid leaks.

2 TRANSMISSION AND CONVERTER REPLACEMENT

TRANSMISSION REMOVAL

1. Raise the car on a hoist.

2. Disconnect the fluid filler tube from the oil pan and drain the fluid.

3. Remove the cover from the lower front side of the converter housing. Remove one of the converter drain plugs (Fig. 1, Part 5-2). Then rotate the converter 180° and remove the other plug. Use a commercial flywheel turning tool. **Do not attempt to turn the converter with a wrench on the converter stud nuts.**

4. Disconnect the drive shaft at the pinion flange, and remove the drive shaft. Install the seal replacer in the extension housing seal.

5. Disconnect the Pitman arm to idler arm rod at the Pitman arm end.

6. Remove one bolt on each muffler inlet pipe to chassis bracket (toward rear of chassis).

7. Disconnect the inlet pipes from the engine exhaust manifolds.

8. Disconnect the cooler lines from the transmission.

9. Disconnect the manual and downshift control rods at the transmission.

10. Remove the diaphragm unit tube from the clip and from the diaphragm unit.

11. Disconnect the speedometer cable at the extension housing.

12. Remove the two engine rear support to transmission bolts.

13. Position a transmission jack under the transmission and raise it slightly to take the weight off the cross member.

14. Remove two transmission rear support bracket-to-chassis-bracket bolts; remove support and hand brake cables from the equalizer. Allow the support and equalizer to hang down from the front brake cable.

15. With the transmission jack in position, remove the four transmission to converter housing bolts.

16. Tilt the rear of the transmission assembly slightly upward, and with the jack move the assembly toward the rear until clear of the converter housing. Lower the assembly and remove it from the car.

TRANSMISSION (GEAR CASE) INSTALLATION

1. Install guide pins in the two top transmission to converter housing attaching bolt holes.

2. Mount the transmission on the jack and position it under the car. **Be sure to align the turbine shaft splines with the turbine splines and the converter impeller lugs with the slots in the front pump drive gear.**

3. Raise the transmission, move it toward the front of the car, and position it on the converter housing.

4. Install the transmission to converter housing lower attaching bolts. Remove the two guide pins and install the two upper bolts. Torque the bolts to specification.

5. Install the transmission rear support and bolts.

6. Lower the transmission onto the rear support, and install the rear support to transmission bolts.

7. Lubricate the front universal slip yoke with Ford lubricant B8A-19589-A. Slide the universal joint yoke onto the output shaft, then connect the drive shaft at the rear axle.

8. Connect the parking brake linkage.

9. Connect the exhaust system and steering linkage.

10. Connect the vacuum tube.

11. Connect the oil cooler to transmission oil inlet and outlet lines to the transmission. Tighten the fittings securely.

12. Connect the speedometer cable to the extension housing.

13. Connect the manual linkage to the transmission manual lever, and connect the downshift linkage to the transmission downshift lever.

14. Install the converter drain plugs and converter lower cover.

15. Connect the fluid filler tube to the oil pan. Tighten the fittings securely.

16. Lower the car to the floor, and fill the transmission with fluid. Then check the fluid level as described in Part 5-2.

17. Adjust the linkage.

CONVERTER REMOVAL

1. Remove the transmission.

2. Remove the four stud nuts and flat washers that attach the converter to the flywheel. Replace the converter housing lower front cover to prevent the converter from falling when the housing is removed.

3. Remove the starter cable, then remove the starter.

4. Remove six converter housing to engine block bolts.

5. Work the converter housing off the engine dowel pins and remove the housing and converter.

CONVERTER INSTALLATION

1. Place the converter in the housing, and retain it there by installing the lower front cover.

2. Raise the housing and converter into position and start the housing on the engine dowel pins.

3. Start the six converter housing to engine bolts.

4. Remove the converter housing lower front cover and position the converter on the flywheel. Install the four converter to flywheel stud flat washers and nuts. Torque to specification.

5. Torque the converter housing to engine bolts to specification.

6. Install the converter housing lower front cover.

7. Install the transmission.

PART 5-5 TRANSMISSION OVERHAUL

Section		Page
1	Removal of Sub-Assemblies	5-23
2	General Inspection	5-25
3	Repair and Assembly of Sub-Assemblies	5-26
4	Transmission Case and Linkage Repair	5-32
5	Installation of Sub-Assemblies	5-33
6	Hydraulic System Bench Tests	5-35

1 REMOVAL OF SUB-ASSEMBLIES

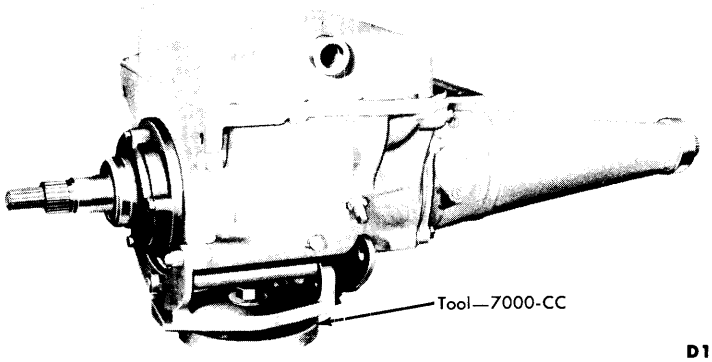

FIG. 1—Transmission Mounted on Bench

Before removing any of the transmission sub-assemblies, thoroughly clean the outside of the transmission case to prevent dirt from getting inside the mechanism.

REMOVAL OF HYDRAULIC CONTROL SYSTEM PARTS

1. Remove the breather tube, and then place the transmission in a holding fixture (Fig. 1).

2. Remove the oil pan, gasket, and filter.

3. Remove the spring seat from the pressure regulator. **Maintain constant pressure on the seat to prevent distortion of the spring seat and the sudden release of the springs.** Remove the pressure regulator springs and pilots, but do not remove the valves.

4. Loosen, but do not remove, the control valve body attaching bolts.

5. Remove the lubrication tube from the pressure regulator and rear pump. If necessary, tap the tube with a soft hammer. **Be careful not to bend or distort the tube.**

6. Lift the rear pump intake tube out of the bore in the transmission case. **Be careful not to bend the tube.**

7. Remove the small compensator pressure tube, and then remove the large control pressure tube from the pressure regulator and the control valve body. **If necessary, tap the tubes with a soft hammer but do not distort them.**

8. Loosen the front and rear servo band adjusting screws five turns. Loosen the front servo attaching bolt three turns.

9. Remove the vacuum diaphragm unit and push rod.

10. Remove the control valve body attaching bolts. Align the levers to permit removal of the valve body, and lift the valve body clear of the transmission case. Pull the body off the servo tubes, and remove it from the case.

11. Remove the regulator body

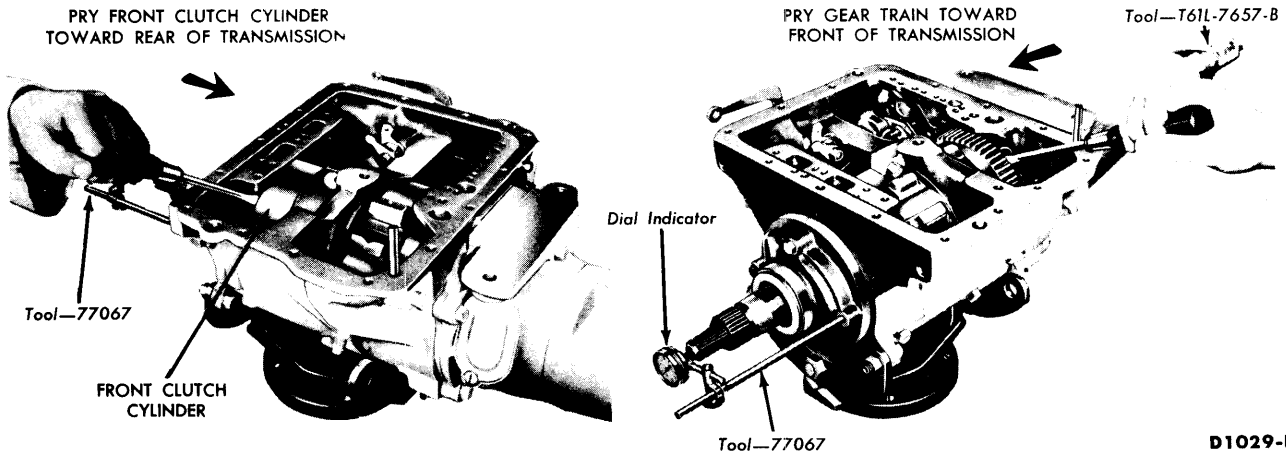

FIG. 2—Transmission End Play Check

from the case. **Keep the control pressure valve and the converter pressure regulator valve in the pressure regulator to avoid damage to the valves.**

12. Remove the front servo apply and release tubes by twisting and pulling at the same time.

13. Remove the front servo attaching bolt. Hold the front servo strut with the fingers, and lift the servo assembly from the case.

14. Remove the rear servo attaching bolts.

15. Hold the actuating and anchor struts with the fingers, and lift the servo from the case.

TRANSMISSION END PLAY CHECK

1. Remove one of the front pump attaching bolts.

2. Mount the dial indicator support tool in the front pump bolt hole. Mount a dial indicator on the support so that the contact rests on the end of the input shaft as shown in Fig. 2.

3. Install the extension housing seal replacer on the output shaft to provide support for the shaft.

4. Pry the front clutch cylinder to the rear of the transmission with a large screwdriver (Fig. 2). Set the dial indicator to zero while maintaining a slight pressure on the screwdriver.

5. Remove the screwdriver and pry the units toward the front of the transmission by inserting the screwdriver between the large internal gear and the transmission case (Fig. 2).

6. Record the indicator reading for use during transmission assembly. End play should be 0.010 to 0.029 inch (minimum end play is preferred).

7. Remove the indicator support, and remove the seal replacer from the output shaft.

REMOVAL OF CASE AND EXTENSION HOUSING PARTS

1. Remove the remaining front pump attaching bolts. Then remove the front pump assembly and gasket. **If necessary, tap the cap screw bosses with a soft hammer to loosen the pump from the case.**

2. Remove the five transmission to extension housing bolts. These bolts also attach the rear pump to the case. Remove the extension housing.

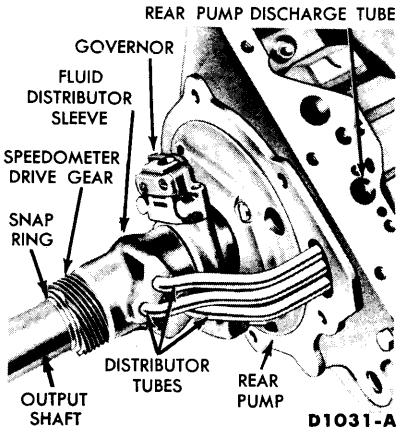

FIG. 3—Output Shaft, Governor and Rear Pump

3. Remove the speedometer drive gear snap ring (Fig. 3) from the output shaft without moving the speedometer drive gear. Place one hand under the output shaft below the speedometer drive gear. Then remove the speedometer drive gear. If the drive gear drive ball does not fall out, remove the ball from the seat in the output shaft.

4. Remove the distributor sleeve and tubes from the transmission.

5. Remove the four seal rings from the output shaft with the fingers to prevent breaking the rings.

6. Remove the governor snap ring from the output shaft. Slide the governor assembly off the output shaft. Then remove the governor drive ball.

7. Install the tube extractor tool in the rear pump discharge tube (Fig. 4), and remove the tube.

8. Remove the rear pump from

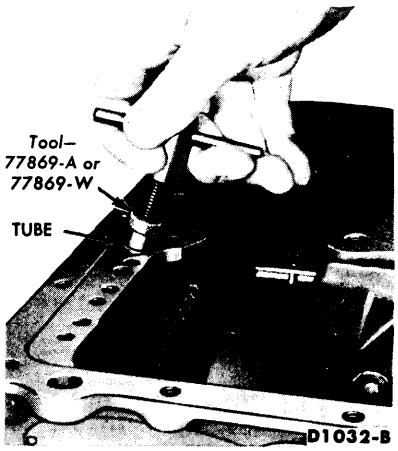

FIG. 4—Rear Pump Discharge Tube Removal

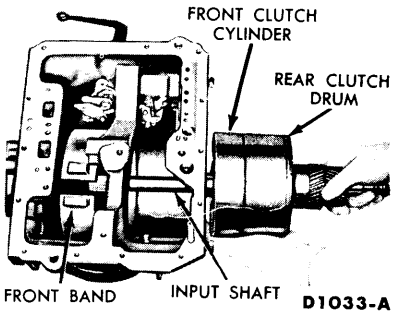

FIG. 5—Input Shaft and Clutch Removal or Installation

the case. Then remove the extension housing and pump gaskets.

9. Remove the rear pump drive key from the output shaft. Then remove the bronze thrust washer from the output shaft.

10. Hold the pinion carrier forward, and remove the output shaft.

11. Remove the selective thrust washer from the rear of the pinion carrier.

12. Remove the two seal rings from the primary sun gear shaft. Remove the pinion carrier.

13. Remove the primary sun gear rear thrust bearing and race from the pinion carrier.

14. Note the rear band position for reference in assembly. The end of the band next to the adjusting screw has a depression (dimple) in the center of the boss. Squeeze the ends of the rear band together, tilt the band to the rear, and remove the rear band from the case.

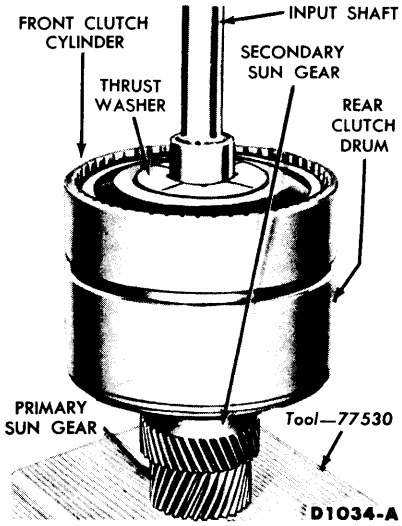

FIG. 6—Input Shaft, Clutches and Primary Sun Gear

15. Remove the two center support outer bolts (one each side) from the transmission case.

16. Exert enough pressure on the end of the input shaft to hold the clutch units together. Then remove the center support, front and rear clutch assemblies as a unit (Fig. 5).

17. Install the clutch assemblies in the bench fixture (Fig. 6).

18. Remove the thrust washer from the front of the input shaft.

19. Remove the front band from the case. Lift the front clutch assembly from the primary sun gear shaft.

20. Remove the bronze and the steel thrust washers from the rear clutch assembly. Wire the thrust washers together to assure correct installation.

21. Remove the front clutch seal rings from the primary sun gear shaft.

22. Lift the rear clutch assembly from the primary sun gear shaft. **Two types of needle bearings are used in the rear clutch hub and drum. One type contains needles that are held in place by the bearing race. The other contains loose needles. Be careful not to lose the individual needles on transmissions so equipped.**

23. Remove the rear clutch seal rings from the primary sun gear shaft. **Do not break the seal rings.**

24. Remove the primary sun gear front thrust washer.

2 GENERAL INSPECTION

OUTPUT SHAFT AND PRIMARY SUN GEAR SHAFT

1. Inspect the thrust surfaces and journals for scores. Inspect the internal gear for broken or worn teeth.

2. Inspect the aluminum sleeve for scores or leakage. Inspect the ring grooves for burrs.

3. Inspect the keyway and drive ball pocket for wear, and inspect the splines for burrs or wear.

4. Inspect the output shaft sleeve for alignment with the governor drive ball (Fig. 7).

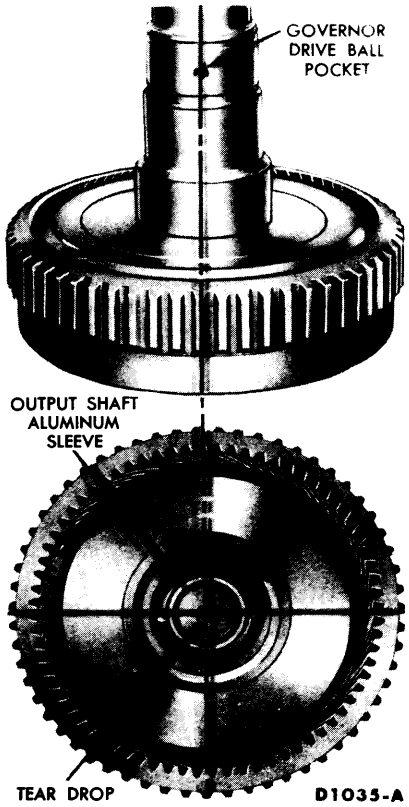

FIG. 7—Correct Position of Output Shaft Aluminum Sleeve

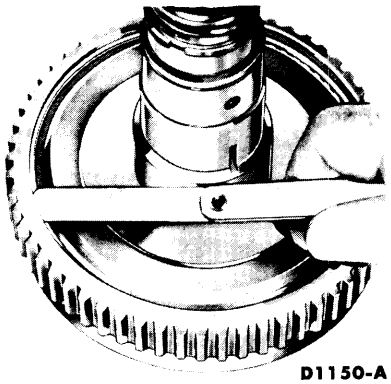

FIG. 8—Checking Output Shaft Snap Ring Clearance

5. Inspect the external parking gear teeth for damage and the speedometer drive gear teeth for burrs.

6. If either the output shaft or ring gear has been replaced, place the assembled unit with the gear face down on the bench, push the shaft downward, and check the clearance between the top of the snap ring and its groove (Fig. 8). If this clearance exceeds 0.002 inch, replace the snap ring with a thicker ring to reduce the clearance to less than 0.002 inch. Selective snap rings are available in several thicknesses for this purpose.

7. Inspect the rubber seal and stop ring at the front of the output shaft spline. If wear or damage is evident replace the seal.

8. Inspect the primary sun gear for broken or worn teeth. Inspect all thrust surfaces and journals for scores. Check all fluid passages (Fig. 9) for obstructions and leakage. Inspect the seal ring grooves for burrs.

9. Inspect the sun gear shaft splines for burrs and wear. Check the front clutch lubrication valve for free movement.

DISTRIBUTOR SLEEVE

1. Inspect the distributor sleeve for scores or excessive ring wear. Inspect the distributor sleeve passages for obstructions.

2. Check the fit of the fluid tubes in the distributor.

PINION CARRIER, ONE WAY CLUTCH AND CENTER SUPPORT

1. On the pinion carrier, inspect the clutch outer race, band surface, pinion gears, bearings and thrust washer (Fig. 10) for scores.

2. Inspect the center support bushing and clutch race for scores.

3. Inspect the sprag ends, drag clips and drag strips for damage.

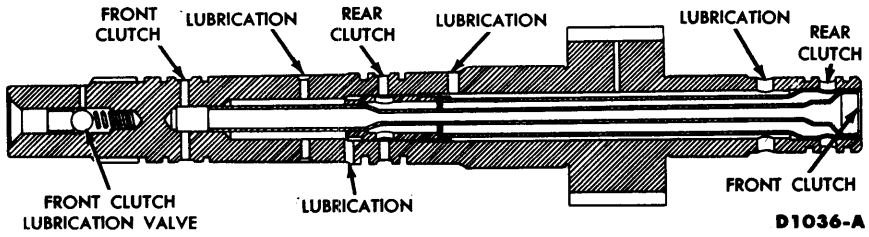

FIG. 9—Cross-Section of Primary Sun Gear Shaft

EXTENSION HOUSING

1. Inspect the housing for cracks. Inspect the gasket surface for burrs or warpage. Check for leakage around the governor inspection cover and gasket. If leakage is found, install a new gasket.

2. Inspect the bushing for scores or wear. If required, replace the bushing as described in Part 5-4.

3. Inspect the rear seal for hardness, cracks, or wear. If the rear seal is to be replaced, proceed according to Part 5-3, Section 1.

Inspect the seal counterbore and remove all burrs and scores.

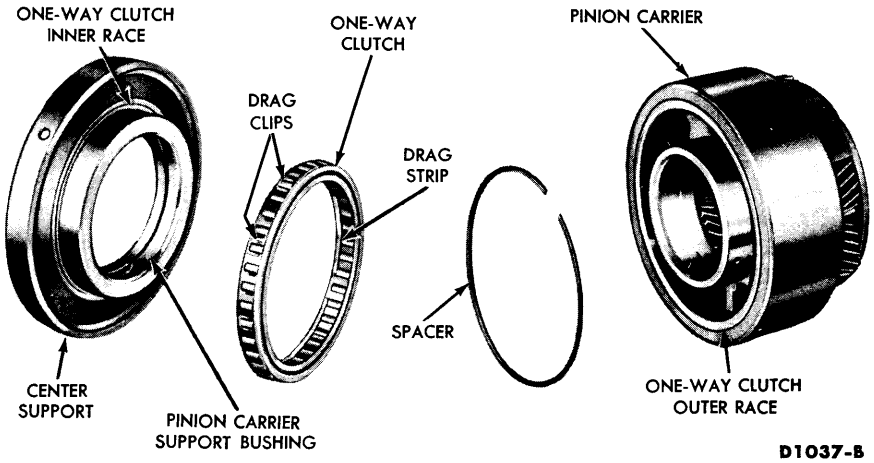

FIG. 10—Pinion Carrier, One Way Clutch and Center Support

3 REPAIR AND ASSEMBLY OF SUB-ASSEMBLIES

During the repair of the sub-assemblies, certain general instructions which apply to all units of the transmissions must be followed. These instructions are given here to avoid unnecessary repetition.

Handle all transmission parts carefully to avoid nicking or burring the bearing or mating surfaces.

Lubricate all internal parts of the transmission before assembly with transmission fluid. **Do not use any other lubricants.** Thrust washers may be coated with petroleum jelly to facilitate assembly. **Always install new gaskets when assembling the parts of the transmission.**

Tighten all bolts and screws to the recommended torque.

PRIMARY SUN GEAR SHAFT

1. Position the primary sun gear shaft in the clutch bench fixture.

2. Check the fit of the seal rings in the grooves of the primary sun gear shaft. The rings should enter the grooves freely without bind.

3. Check the fit of the seal rings in their respective bores. A clearance of 0.002-0.009 inch should exist between the ends of the rings.

4. Install the seal rings on the shaft, and check them for free movement in the grooves.

5. If the front clutch lubrication valve is not operating properly, repair it by installing a new kit.

REAR CLUTCH

1. Remove the clutch pressure plate snap ring, and remove the pressure plate from the drum. Remove the bronze composition and the steel plates from the drum.

2. Compress the spring in an arbor press with the tool shown in Fig. 11, and remove the snap ring.

3. Guide the spring retainer while releasing the press to prevent the retainer from locking in the snap ring groove.

4. Position an air hose and the primary sun gear shaft on the rear clutch as shown in Fig. 12. Place the hose nozzle in one of the holes in the shaft, place one finger over the other hole, and then force the clutch piston out of the clutch drum with air pressure. **Hold one hand over the piston to prevent damage.**

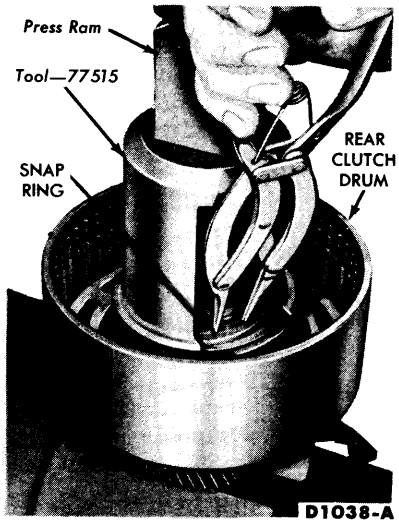

FIG. 11—Clutch Spring Snap Ring Removal

5. Remove the clutch piston inner seal ring from the clutch drum. Remove the clutch piston outer seal ring from the groove in the piston.

6. Inspect the drum band surface, the bushing, and thrust surfaces for scores. Minor scores may be removed with crocus cloth. **Badly scored parts must be replaced.**

7. Inspect the needle bearings for wear. Inspect the clutch piston bore and the piston inner and outer bearing surfaces for scores.

8. Check the air bleed ball valve in the clutch piston for free movement. The orifice must not be plugged.

9. Check the fluid passages for obstructions. All fluid passages must be clean and free of obstructions.

10. Inspect the clutch plates for scores, and check the plates for fit on the clutch hub serrations. Replace all plates that are badly scored or do not fit freely in the hub serrations. **Front clutch plates differ in friction characteristics from rear clutch plates and are not interchangeable.**

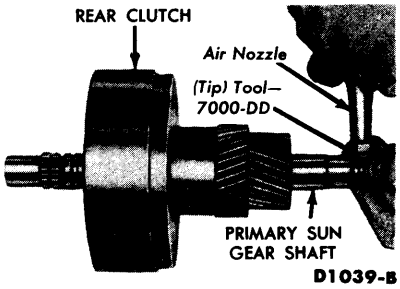

FIG. 12—Rear Clutch Piston Removal

FIG. 13—Checking Rear Clutch Plate Coning

11. Position the steel plates on a flat surface. Then check the coning with a feeler gauge (Fig. 13). The plates are coned 0.010-inch.

12. Inspect the clutch pressure plate for scores on the clutch plate bearing surface. Check the clutch release spring for distortion.

13. Lubricate all parts to facilitate assembly. Install the clutch piston inner seal ring in the groove in the drum. Install a new outer seal ring on the piston, and install the piston in the clutch drum.

14. Install the clutch release spring, and position the retainer on the spring.

15. Position the clutch assembly in an arbor press, and then position the proper tool on the spring retainer. Compress the clutch spring, and install the snap ring. **While compressing the spring, guide the retainer to avoid interference of the retainer with the snap ring groove. Make sure the snap ring is fully seated in the groove.**

16. Install the bronze composition and the steel clutch plates alternately, starting with a steel plate. **Because of coning, all steel plates must face the same direction with either all concave or all convex sides up.**

17. Install the clutch pressure plate with the bearing surface down. Then install the clutch pressure plate snap ring. Make sure the snap ring is fully seated in the groove.

18. Install the bronze thrust washer on the primary sun gear shaft. Lubricate all parts with automatic transmission fluid or petroleum jelly. Install the two center seal rings.

19. Install the rear clutch on the primary sun gear shaft. **Be sure all of the needles are in the hub if the unit is equipped with loose needle bearings.** Assemble two seal rings in the front grooves.

20. Install the steel and the bronze thrust washers on the front of the secondary sun gear assembly. If the steel washer is chamfered, place the chamfered side down.

FRONT CLUTCH

1. Remove the clutch cover snap ring with a screwdriver, and remove the input shaft from the clutch drum.

2. Remove the thrust washer from the thrust surface of the clutch hub. Insert one finger in the clutch hub, and lift the hub straight up to remove the hub from the clutch drum.

3. Remove the bronze composition and the steel clutch plates, and then remove the pressure plate from the clutch drum.

4. Place the front clutch spring compressor on the release spring, position the clutch drum on the bed of an arbor press, and then compress the release spring with the arbor press until the release spring snap ring can be removed (Fig. 14).

5. Remove the clutch release spring from the clutch drum.

6. Install the special nozzle shown in Fig. 12 on an air hose. Place the nozzle against the clutch apply hole in the front clutch housing, and force the piston out of the housing.

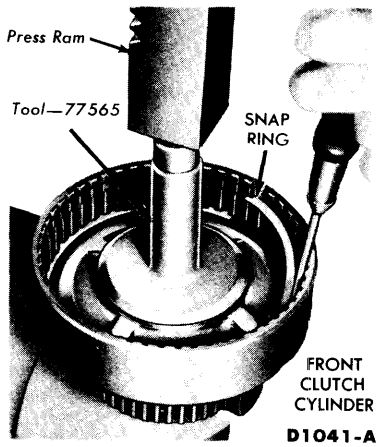

FIG. 14—Front Clutch Spring Snap Ring Removal

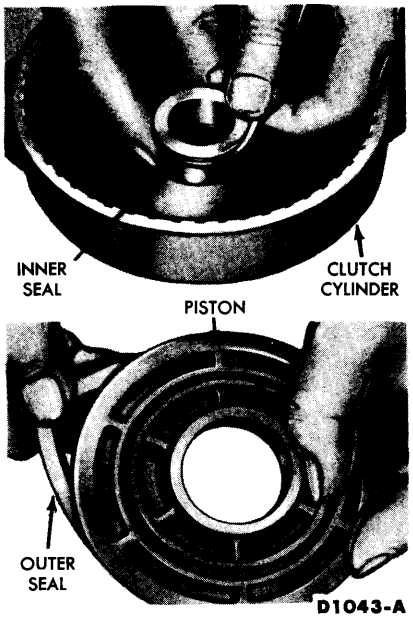

FIG. 15—Front Clutch Piston Seals

7. Remove the piston inner seal from the clutch housing. Remove the piston outer seal from the groove in the piston (Fig. 15).

8. Inspect the clutch cylinder thrust surfaces, piston bore, and clutch plate serrations for scores or burrs. Minor scores or burrs may be removed with crocus cloth. Replace the clutch cylinder if it is badly scored or damaged.

9. Check the fluid passage in the clutch cylinder for obstructions. Clean out all fluid passages.

10. Inspect the clutch piston for scores and replace if necessary. Check the clutch piston check ball for free movement and proper seating (Fig. 16).

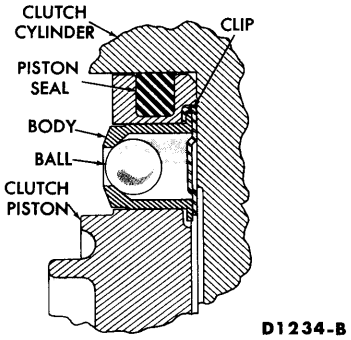

FIG. 16—Front Clutch Piston

11. Check the clutch release spring for distortion and cracks. Replace the spring if it is distorted or cracked.

12. Inspect the bronze composition and the steel clutch plates and the clutch pressure plate for scored bearing surfaces. Replace all parts that are deeply scored.

13. Check the clutch plates for flatness and for fit on the clutch hub serrations. Discard any plate that does not slide freely on the serrations or that is not flat. **Front clutch plates differ in friction characteristics from the rear clutch plates and are not interchangeable.**

14. Check the clutch hub thrust surfaces for scores and the clutch hub splines for wear.

15. Inspect the input shaft bearing surfaces for scores. If excessive clearance or scores are found, discard the unit.

16. Check the splines or the input shaft for wear and replace them if they are excessively worn.

17. Inspect the bushing in the input shaft for scores.

18. Lubricate all parts with automatic transmission fluid. Install a new piston inner seal ring in the clutch cylinder as shown in Fig. 15.

19. Install a new piston outer seal in the groove in the piston as shown in Fig. 15.

20. Install the piston in the clutch housing. **Make sure the steel bearing ring is in place on the piston.**

21. Position the release spring in the clutch cylinder with the concave side up. Place the release spring compressor on the spring, compress the release spring compressor with an arbor press, and then install the snap ring as shown in Fig. 14. **Make sure the snap ring is fully seated in the groove.**

22. Install the front clutch cylinder on the primary sun gear shaft by rotating the units until the clearance between the front cylinder and the rear drum is approximately 1/16-inch **Be careful not to break the seal rings on the front of the primary sun gear shaft.**

23. Install the clutch hub in the front clutch cylinder with the deep counterbore down (Fig. 27). Install the thrust washer on the hub.

24. Install the pressure plate in the front clutch cylinder with the bearing surface toward the front (Fig. 28). Install the bronze composition and the steel clutch plates alternately, starting with a bronze plate. Lubricate the plates (Fig. 29).

25. Install the input shaft and its snap ring. **Be sure the snap ring is seated in the groove.** Install the thrust washer on the input shaft (Fig. 6).

FRONT PUMP

1. Remove the stator support attaching screws and lockwashers, and then remove the stator support.

2. Mark the top surface of the pump driven gear with prussian blue to assure correct assembly. **Do not scratch or punch mark the pump gears.**

3. Remove the drive and driven gears from the pump body.

4. Refer to Fig. 17 for a disassembled view of the front pump. Inspect the pump body bushing, drive gear bushing, gear pockets, and crescent for scores.

5. Inspect the mating surfaces of the pump body and cover for burrs.

6. Inspect the drive and driven gear bearing surface for scores, and check the gear teeth for burrs. Inspect the stator support splines for burrs and wear.

7. Check the fluid passages for obstructions.

8. If any parts other than the stator support are found defective, replace the pump as a unit. Minor burrs and scores may be removed with crocus cloth. The stator support is serviced separately.

9. Bolt the front pump to the transmission case with capscrews.

10. Install an oil seal remover, and pull the front seal from the pump body. **The front seal is 1/2 inch thick.**

11. Clean the pump body counterbore. Then inspect the bore for rough spots. Smooth up the counterbore with crocus cloth.

12. Remove the pump body from the transmission case.

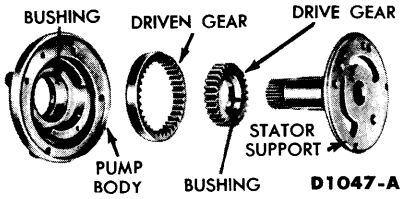

FIG. 17—Front Pump Disassembled

FIG. 18—Front Seal Installation

13. Coat the outer diameter of a new seal with FoMoCo Sealing Compound, or its equivalent, then position the seal in the pump body. Drive the seal into the pump body with the tool shown in Fig. 18, until it is firmly seated in the body.

14. Place the pump driven gear in the pump body with the mark on the gear facing upward. Install the drive gear in the pump body.

15. Install the stator support, attaching screws, and lock washers. Check the pump for free movement.

REAR PUMP

1. Remove the screws and lockwashers which secure the pump cover to the pump body, then remove the cover.

2. Mark the top face of the pump drive and driven gear with prussian blue to assure correct installation of gears at assembly (Fig. 19). **Do not scratch or punch mark the pump gears.**

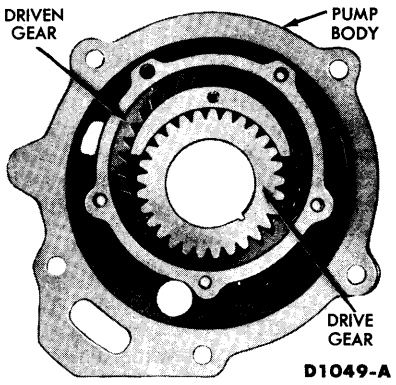

FIG. 19—Rear Pump

3. Remove the drive and driven gears from the pump body.

4. Inspect the gear pockets and the crescent of the pump body for scores or pitting.

5. Inspect the inner bushing and the drive and driven gear bearing surfaces for scores.

6. Check all fluid passages for obstructions, and check mating surfaces and gasket surfaces of the pump body and cover for burrs.

7. Inspect the pump cover bearing surface for scores. Minor burrs or scores may be removed with crocus cloth.

8. If any pump parts, other than the pump cover, are defective, replace the pump as a unit. The pump cover can be replaced separately.

9. Place the pump driven gear in the pump body with the mark (placed on the gear at disassembly) facing upward.

10. Install the drive gear in the pump body with the mark facing upward.

11. Install the pump cover, attaching screws, and lock washers. Torque the screws to specifications. Check the pump gears for free movement.

PRESSURE REGULATOR

1. Remove the valves from the regulator body.

2. Remove the regulator body cover attaching screws, and remove the cover.

3. Remove the separator plate, and then remove the front pump check valve and spring from the regulator cover.

4. Wash all parts thoroughly in clean solvent and blow dry with moisture-free compressed air.

5. Inspect the regulator body and cover mating surfaces for burrs.

6. Check all fluid passages for obstructions.

7. Inspect the control pressure and converter pressure valves (Fig. 20) and bores for burrs and scores. Remove all burrs carefully with crocus cloth.

8. Check free movement of the valves in their bores. The valves should fall freely into the bores when both the valve and bore are dry.

9. Inspect the valve springs for distortion.

10. Position the check valve spring and valve in the regulator cover.

11. Position the separator plate on the regulator cover.

12. Position the regulator cover and separator plate on the regulator body, then install the attaching screws. Torque the screws to specification.

13. Insert the valves in the pressure regulator body (Fig. 20).

CONTROL VALVE BODY

During the disassembly of the control valve assembly, avoid damage to valve parts and keep the valve parts clean. Place the valve assembly on a clean shop towel while performing the disassembly operation. **Do not separate the upper and lower valve bodies and cover until after the valves have been removed.**

DISASSEMBLY

1. Remove the manual valve (Fig. 21).

2. Remove the throttle valve body and the separator plate. Remove the throttle valve.

3. Remove one screw attaching the separator plate to the lower valve body. Remove the upper body front cover. **The plate is spring loaded. Apply pressure to the plate while removing the attaching screws.**

4. Remove the compensator sleeve and plug, and remove the compensator valve springs. Remove the compensator valve.

5. Remove the throttle boost short valve and sleeve. Remove the throttle boost valve spring and valve.

6. Remove the downshift valve and spring.

7. Remove the upper valve body rear plate.

8. Remove the compensator cut back valve.

9. Remove the lower body side plate (Fig. 21). **The plate is spring loaded. Apply pressure to the plate while removing the attaching screws.**

10. Remove the 1-2 shift valve and spring. Remove the inhibitor valve and spring.

11. Remove the two screws attaching the separator plate to the cover. Remove the lower body and plate. **The end plate is spring loaded. Apply pressure to the plate while removing the attaching screws.**

12. Remove the rear servo lockout valve and spring.

13. Remove the throttle reducing valve, spring, 2-3 delay valve and throttle reducing valve sleeve. Remove the 2-3 shift delay valve, the 2-3 shift valve spring and the 2-3 shift valve.

14. Remove the transition valve.

15. Remove the plate (Fig. 21) from the valve body cover.

16. Remove the check ball spring and check ball. Remove the 3-2 kickdown control valve spring and valve.

17. Remove the 3-2 coasting control valve spring retainer from the cover. Remove the spring and valve.

18. Remove the through bolts and screws. Then separate the bodies.

19. Inspect the rear pump check valve for freedom of movement. This valve seat in the lower body, is staked for a firm fit and should not be removed unless a new one is to be installed.

INSPECTION

1. Clean all parts thoroughly in clean solvent, and then blow them dry with moisture-free compressed air.

2. Inspect all valve and plug bores for scores. Check all fluid passages for obstructions. Inspect the check valve for free movement. Inspect all mat-

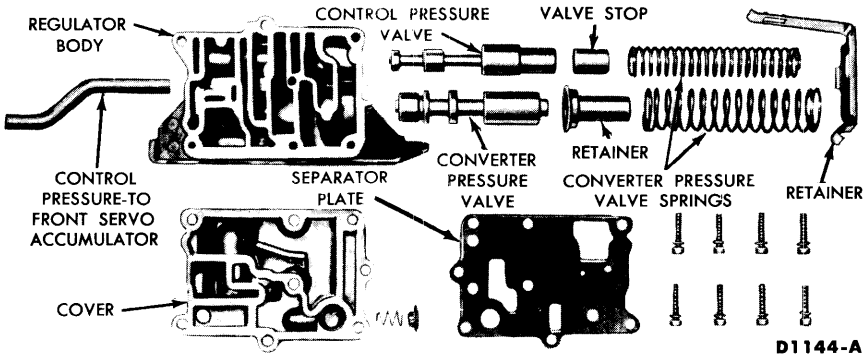

FIG. 20—Pressure Regulator

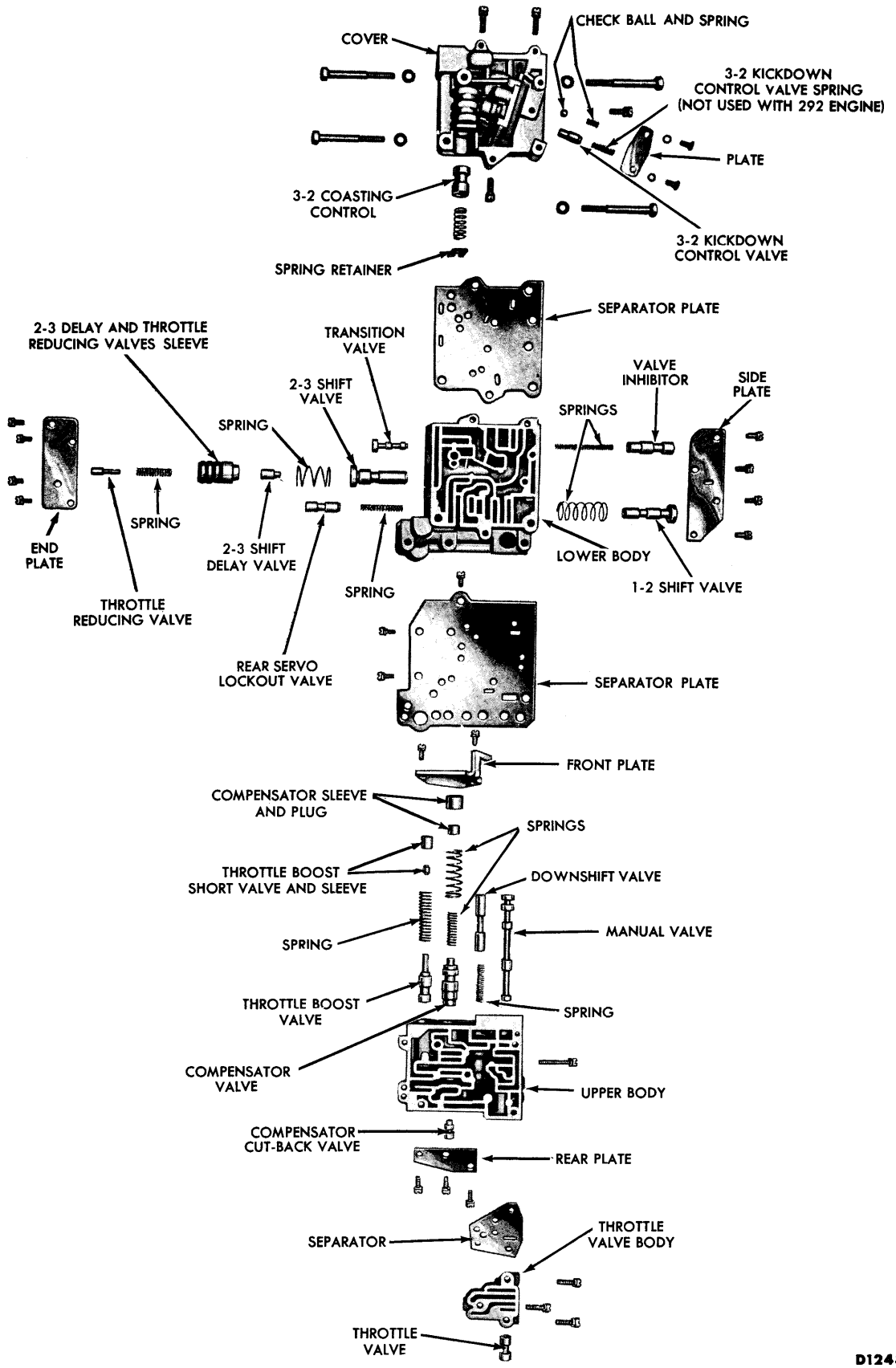

FIG. 21—Control Valve Body

ing surfaces for burrs or distortion. Inspect all plugs and valves for burrs and scores. **Crocus cloth can be used to polish valves and plugs if care is taken to avoid rounding the sharp edges of the valves and plugs.**

3. Inspect all springs for distortion. Check all valves and plugs for free movement in their respective bores. Valves and plugs, when dry, must fall from their own weight in their respective bores.

4. Roll the manual valve on a flat surface to check it for a bent condition.

ASSEMBLY

1. Arrange all parts in their correct positions. Rotate the valves and plugs when inserting them in their bores to avoid shearing of soft body castings.

2. Position the separator plate on the upper body.

3. Be sure that the rear pump check valve spring, valve, and seat in the lower body are correctly installed. Position the lower body on the upper body, and start **but do not tighten** the attaching screw.

4. Position the cover and separator plate on the lower body and start the four through bolts.

5. Align the separator with the upper and lower valve body attaching bolt holes. Install and torque the four valve body bolts to specifications. **Excessive tightening of these bolts may distort the valve bodies, causing valves or plugs to stick.**

6. Install the 3-2 kick-down control valve and spring, and the check ball and spring in the cover. Install the plate.

7. Install the 3-2 coasting control valve, spring, and spring retainer in the cover.

8. Install the transition valve in the lower body.

9. Install the 2-3 shift valve and spring. Install the 2-3 shift delay valve and the spring and throttle reducing valve in the sleeve. Slide the sleeve and valve into position in the lower body.

10. Install the rear servo lockout valve spring and valve. Install the lower body end plate.

11. Install the inhibitor valve spring and valve in the lower body.

12. Install the 1-2 shift valve spring and valve. Install the lower body side plate.

13. Install the compensator cut-

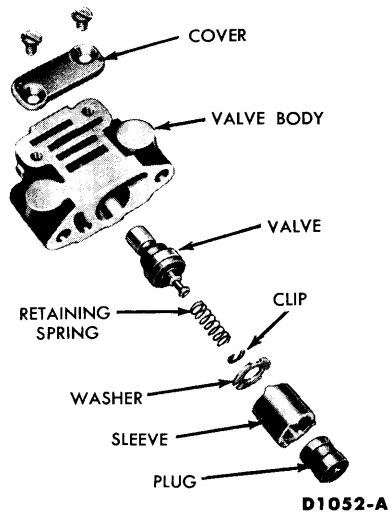

FIG. 22—Governor

back valve in the upper body. Install the upper body rear plate.

14. Install the downshift valve spring and valve.

15. Install the throttle boost valve and spring. Install the throttle boost short valve and sleeve.

16. Install the compensator valve, inner and outer compensator springs, and the compensator sleeve and plug.

17. Position the front plate. Apply pressure to the plate while installing the two attaching screws.

18. Install the throttle valve in the throttle valve body. Position the separator on the upper body and install the throttle valve body. Install the three attaching screws.

19. Install four screws attaching the cover to the lower body, two screws attaching the separator plate to the upper body, and one screw attaching the separator plate to lower body. Torque the cover and body screws to specification.

20. Install the manual valve.

GOVERNOR

1. Remove the governor valve body cover.

2. Remove the governor valve body from the counterweight (Fig. 22).

3. Remove the plug, sleeve, washer, and valve from the body.

4. Inspect the governor valve and bore for scores. Minor scores may be removed with crocus cloth. Replace the governor if the valve or body is deeply scored.

5. Check for free movement of the valve in the bore. Inspect fluid passages in the valve body and counterweight for obstructions. **All fluid passages must be clean.**

6. Inspect the mating surfaces of the governor body and counterweight for burrs and distortion. Mating surfaces must be smooth and flat.

7. Install the governor valve in the bore of the valve body. Install the washer, sleeve, and plug. Make sure that the three points on the end of the sleeve seat in the slots in the washer.

8. Install the body on the counterweight. **Make sure the fluid passages in the body and the counterweight are aligned.**

9. Position the valve body cover on the body, and install the screws.

FRONT SERVO

1. Remove the servo piston retainer snap ring (Fig. 23). **The servo piston is spring loaded. Apply pressure to the piston when removing the snap ring.**

2. Remove the servo piston retainer, servo piston, and the return piston from the servo body. It may be necessary to tap the piston stem lightly with a soft hammer to separate the piston retainer from the servo body.

3. Remove the screw and washer from the end of the piston stem, and

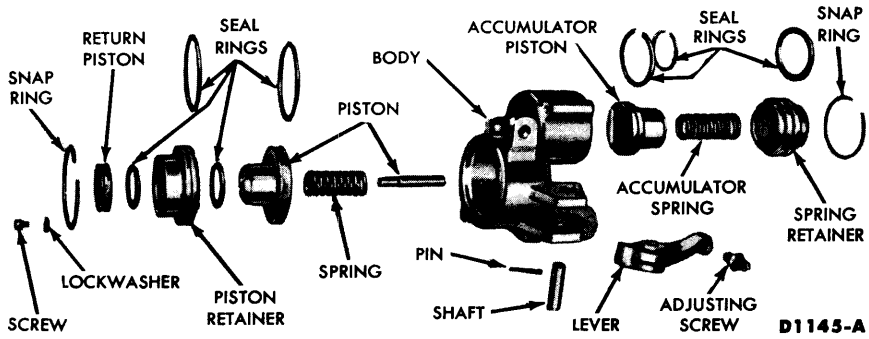

FIG. 23—Front Servo

separate the piston retainer, return piston, and servo piston.

4. Remove all of the seal rings, and remove the spring from the servo body.

5. Apply pressure against the accumulator spring retainer, and remove the retainer snap ring from the servo body. Separate the accumulator piston and spring retainer.

6. Remove the seal rings from the accumulator piston and the retainer.

7. Inspect the servo body for cracks and the piston bore and the servo piston stem for scores (Fig. 23). Check the fluid passages for obstructions.

8. Check the actuating lever for free movement, and inspect it for wear. If necessary to replace the actuating lever or shaft, remove the retaining pin and push the shaft out of the bracket. If the shaft is not retained by a pin, it is retained in the body by serrations on one end of the shaft. These serrations cause a press fit at that end. To remove the shaft press on the end opposite the serrations.

Inspect the adjusting screw threads and the threads in the lever.

9. Check the servo spring and servo band strut for distortion.

10. Inspect the servo band lining for excessive wear and bonding to the metal. **The band should be replaced if worn to a point where the grooves are not clearly evident.**

11. Inspect the band ends for cracks and check the bands for distortion.

12. To assemble, reverse the disassembly procedure.

REAR SERVO

1. Remove the servo actuating lever shaft retaining pin with a ⅛-inch punch. Remove the shaft and actuating lever needle bearings and thrust washers.

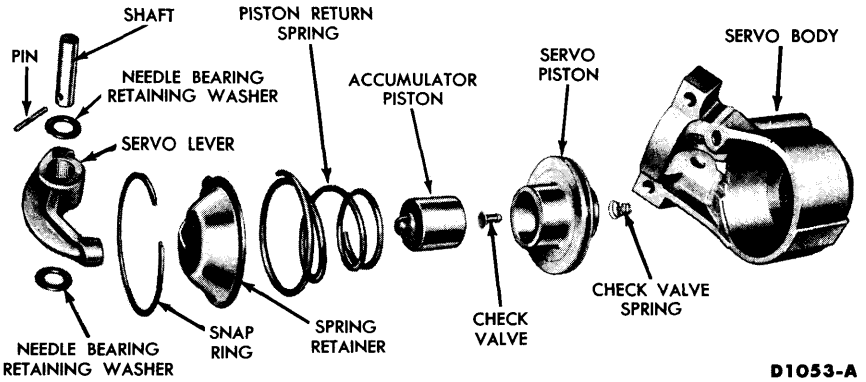

FIG. 24—Rear Servo

2. Press down on the servo spring retainer, and remove the snap ring. **Release the pressure on the retainer slowly to prevent the spring from flying out.**

3. Remove the retainer and servo spring.

4. Force the piston out of the servo body with air pressure. **Hold one hand over the piston to prevent damage.**

5. Remove the piston seal ring. Remove the accumulator piston from the servo piston.

6. Inspect the servo body for cracks and the piston bore for scores (Fig. 24). Inspect the servo body to transmission case mating surface for burrs.

7. Check the fluid passages for obstructions. Inspect the fluid passage plugs for tightness in the body. Inspect the check valve in the servo piston for freedom of movement and proper seating.

8. Inspect the accumulator piston stem for scores. Inspect the actuating lever socket for scores and wear. Check the actuating lever and shaft for wear.

9. Inspect the band and the struts for distortion. Inspect the band ends for cracks.

10. Inspect the servo spring for distortion.

11. Inspect the servo band lining for excessive wear and bond to metal band. **The band should be replaced if worn to a point where the grooves are not clearly evident.**

12. Inspect the accumulator piston and bore for scores. **Be sure that the piston slides freely in the bore.**

13. Install the accumulator piston in the servo piston.

14. Install a new seal ring on the servo piston.

15. Install the piston in the servo body. **Lubricate the parts to facilitate assembly.** Install the servo spring with the small coiled end against the servo piston.

16. Install the spring retainer. Compress the spring with a C-clamp. Then install the snap ring. **The snap ring must be fully seated in the grove.**

17. Install the needle bearings in the actuating lever. Install the actuating lever and thrust washers with the socket in the lever bearing on the piston stem. Install the actuating lever shaft aligning the retaining pin holes, and install the pin.

18. Check the actuating lever for free movement.

4 TRANSMISSION CASE AND LINKAGE REPAIR

DISASSEMBLY

1. Remove the inner downshift lever shaft nut. Then remove the inner downshift lever.

2. Remove the outer downshift lever and shaft. Remove the downshift lever shaft seal from the counterbore in the manual lever shaft.

3. Remove the cotter pin from each end of the parking pawl torsion rod, then remove the rod.

4. Rotate the manual shaft until the detent lever clears the detent plunger. Then remove the detent plunger and spring. **Do not allow the detent plunger to fly out of the case.**

5. Remove the manual lever shaft nut, and remove the detent lever. Remove the outer manual lever and shaft from the transmission case.

6. Remove the clip retaining the torsion lever assembly and disassemble the assembly.

7. Tap the toggle lever sharply toward the rear of the case to remove the plug and pin.

8. Remove the pawl pin by work-

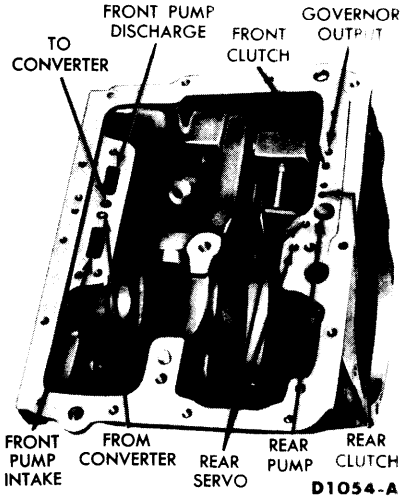

FIG. 25—Transmission Case Fluid Passages

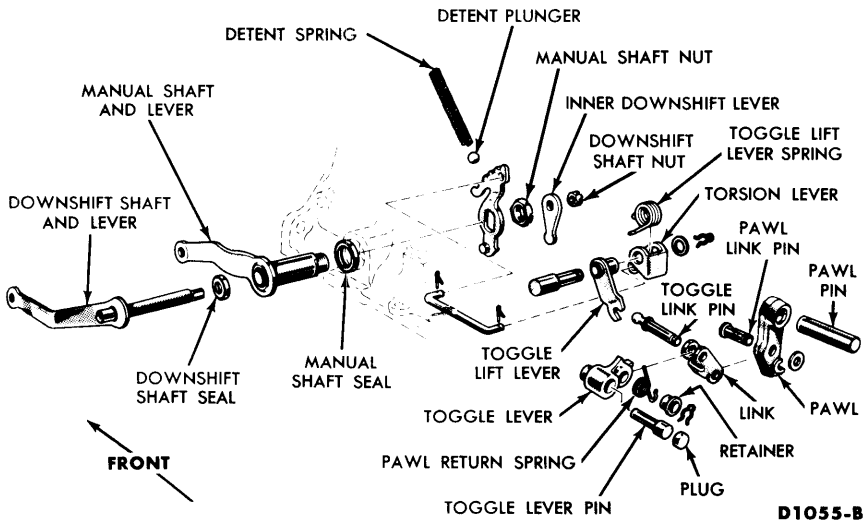

FIG. 26—Typical Control Linkage

ing the pawl back and forth. Remove the pawl and toggle lever assembly, and disassemble.

9. Remove the manual shaft seal

INSPECTION

Clean the case thoroughly with clean solvent. Blow out all passages (Fig. 25).

Inspect the case for cracks and stripped threads. Inspect the gasket surfaces and mating surfaces for burrs. Check the breather tube for obstructions. Check all fluid passages for obstructions and leakage.

Inspect the case bushing and center support bushing for scores. Inspect the torsion lever pin for wear.

Check all parking linkage parts (Fig. 26) for wear or damage.

ASSEMBLY

1. Assemble the toggle lever and pawl assembly and install in the case.

2. Install the torsion lever assembly, using two screwdrivers to position the spring on the lever.

3. Coat the outer diameter of a new manual shaft seal with gasket sealer and install the seal in the case.

4. Install the manual lever and shaft in the case.

5. Install the detent lever and the attaching nut. Torque the nut to specification.

6. Install the detent spring and ball using a tube to depress the ball and spring while rotating the lever.

7. Complete the lever installation using a new downshift lever shaft seal.

8. Check for free linkage operation.

5 INSTALLATION OF SUB-ASSEMBLIES

Do not use force to assemble mating parts. If the parts do not assemble freely, examine them for the cause of the difficulty. **Always use new gaskets during the assembly operations.**

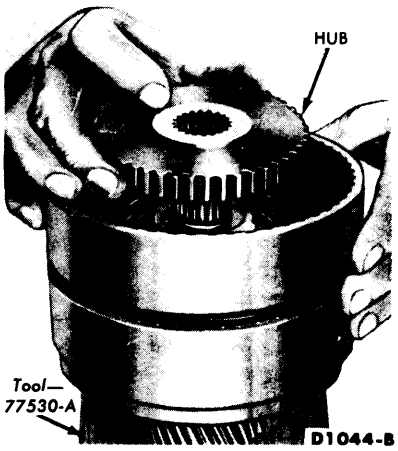

FIG. 27—Front Clutch Hub Installation

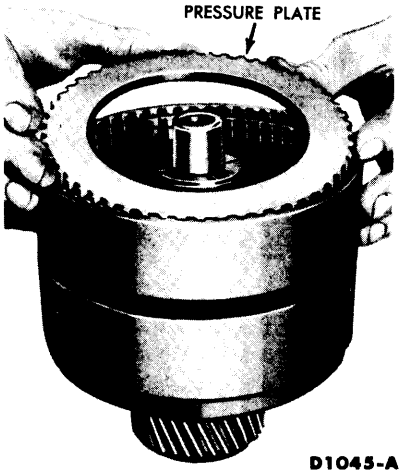

FIG. 28—Pressure Plate Installation

CLUTCH ASSEMBLIES

1. Install the front band in the transmission case so that the anchor end is aligned with the anchor in the case.

2. Lift the clutch assemblies out of

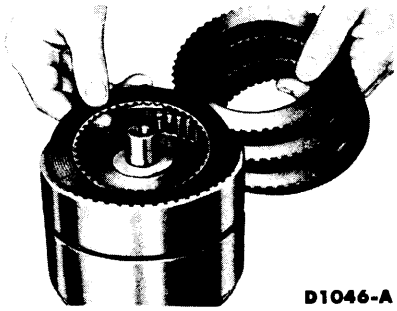

FIG. 29—Clutch Plate Installation

the holding block. **Do not allow the clutches to separate.**

3. Install the sub-assemblies in the transmission case while positioning the servo band on the drum. Hold the units together while installing them (Fig. 5).

CENTER SUPPORT, ONE-WAY CLUTCH, PINION CARRIER, AND OUTPUT SHAFT

1. On the bench, install the one-way clutch on the center support with the flanged side of the cage rings up (Fig. 30).

2. Carefully compress each drag strip as it is started on the inner race. After all the drag strips are started on the race, rotate the clutch to tilt the sprags. Then push the clutch all the way down on the center support. Place a strong rubber band around the sprag outer ends.

3. Install the center support and clutch in the case.

4. Install the right-hand and left-hand center support outer bolts and external tooth lockwashers. **The lockwashers must be installed with the rolled edge toward the transmission case to insure a tight seal. Torque the bolts to specification.**

5. Position the rear band in the case with the dimpled end against the adjusting stop strut. Install the primary sun gear rear thrust bearing race and bearing on the thrust face inside the pinion carrier (Fig. 31). Make sure the one-way clutch spacer is in the pinion carrier (Fig. 10).

6. Install the pinion carrier in the case and start the pinion carrier front pilot in the center support bushing. Work the pinion carrier forward until the sprags are started on the clutch outer race.

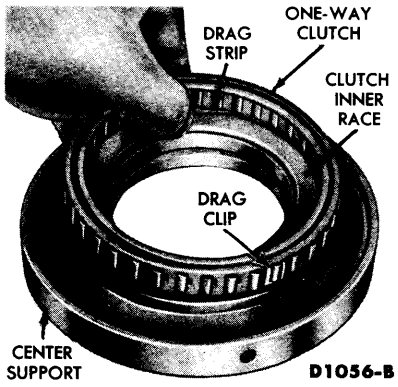

FIG. 30—One Way Clutch Installation on Center Support

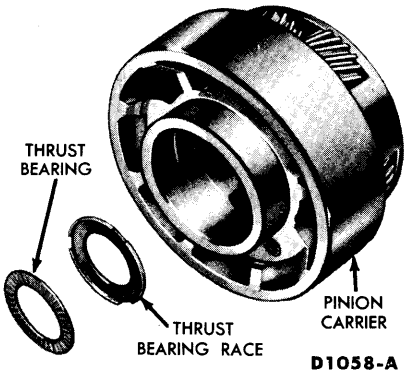

FIG. 31—Primary Sun Gear Rear Thrust Bearing

7. Remove the rubber band.

8. Work the pinion carrier forward to the point where the one-way clutch is barely visible. Rotate the pinion carrier counterclockwise (from the rear) and note whether the clutch rotates with the pinion carrier or remains stationary with the center support.

9. The clutch drag clip frictional grip on the clutch outer race is stronger than the drag strip frictional grip on the inner race. Therefore, the clutch should rotate with the pinion carrier. If it does not rotate with the pinion carrier, replace the clutch.

10. Install the selective thrust washer on the pinion carrier rear pilot. **If the end play was not within specifications when checked prior to disassembly, replace the washer with one of proper thickness. Selective washers are available in thicknesses of 0.063-0.061 inch, 0.069-0.067 inch, 0.076-0.074 inch, and 0.083-0.081 inch.**

11. Install the output shaft, carefully meshing the internal gear with the pinions.

REAR PUMP

1. Position the rear pump drive key in the keyway on the output shaft.

2. Position new front and rear gaskets on the pump body. Retain the gaskets with transmission fluid.

3. Install the thrust washer on the pump body with the bronze side up. Align the thrust washer tangs with the bosses on the pump body, and install the rear pump. **Be sure the drive key is aligned with the keyway in the pump drive gear.**

GOVERNOR

1. Position the governor drive ball in the pocket in the output shaft. Retain the ball with transmission fluid.

2. Install the governor assembly aligning the groove with the ball in the output shaft. **Install the governor with the governor body plate toward the rear of the transmission.**

3. Install the governor snap ring.

DISTRIBUTOR

1. Place the four seal rings in the distributor sleeve, and check the ring gap.

2. Check the fit of the seal rings in the grooves in the output shaft. The rings should rotate freely. Install the rings in the grooves of the output shaft.

3. Install the three tubes in the distributor sleeve (Fig. 3).

4. Install the distributor sleeve on the output shaft, chamfer forward. Lubricate parts to facilitate assembly. Slide the sleeve forward over the four rings and at the same time start the tubes into the case. The distributor sleeve is located between the governor snap ring and speedometer driving gear.

5. Install a new seal on the rear pump outlet tube and install the tube in the transmission case and rear pump body.

EXTENSION HOUSING

1. Position the speedometer drive gear ball in the pocket of the output shaft. Retain it with fluid. Install the speedometer drive gear. Install the speedometer gear snap ring.

2. Insert the extension housing oil seal replacer and pilot in the housing. Place a new gasket on the housing and then install the extension housing on the transmission case. Install the extension housing attaching bolts and external tooth lockwashers. Install the breather tube when the transmission is ready for installation. **The lockwashers must be installed with the rolled edge toward the transmission case. To insure a tight seal use sealer on the bolt threads.**

3. Torque the extension housing attaching bolts to specification.

4. Install the governor inspection cover and a new gasket on the housing.

FRONT PUMP

1. Position a new front pump gasket in the counterbore of the transmission case.

2. Install the front pump, aligning the pump bolt holes with the holes in the case.

3. Install three of the front pump attaching bolts. Torque the bolts to specification.

CHECK TRANSMISSION END PLAY

1. Mount the dial indicator support in a front pump bolt hole. Mount a dial indicator on the support so that the contact rests on the end of the input shaft (Fig. 2).

2. Use a large screwdriver to pry the front of the clutch drum toward the rear of the transmission (Fig. 2). Set the dial indicator to zero.

3. Remove the screwdriver and pry the units toward the front of the transmission by inserting a screwdriver between the large internal gear and the transmission case (Fig. 2). Note the indicator reading. End play should be 0.010 to 0.029 inch. (Minimum end play is preferred).

4. Remove the indicator, and remove the tool from the extension housing.

5. Install the one remaining front pump attaching bolt. Torque the bolt to specification.

FRONT SERVO

1. Position the front band forward in the case with the band ends up

2. Position the servo strut with the slotted end aligned with the servo actuating lever and the small end aligned with the band end. Rotate the band, strut, and servo into position engaging the anchor end of the band with the anchor pin in the case.

3. Locate the servo on the case, and install the attaching bolt **Tighten the attaching bolt only two or three threads.**

4. Install the servo tubes.

REAR SERVO

1. Position the servo anchor strut, then rotate the rear band to engage the strut.

2. Position the servo actuating lever strut with a finger, and then install the servo and attaching bolts. Torque the bolts to specification.

PRESSURE REGULATOR BODY

1. Install the pressure regulator body and attaching bolts. Install the tube between the regulator body and front servo. Then torque the attaching bolts to specification.

2. Install the control and converter valve guides and springs. Install the spring retainer.

3. Install a new seal ring on the rear pump intake tube, and install the tube in the case.

CONTROL VALVE BODY

1. Install the control valve assembly, using care to align the servo tubes with the control valve. Align the inner downshift lever between the stop and the downshift valve. **Align the manual valve with the actuating pin in the manual detent lever. Do not tighten the attaching bolts.**

2. Install the large control pressure tube in the valve body and regulator.

3. Install the small control pressure compensator tube in the valve body and regulator.

4. Move the control valve body toward the center of the case as far as the attaching bolts will permit. This movement is made to take up the clearance between the manual valve and the actuating pin on the manual detent lever.

5. Torque the attaching bolts to specification.

6. Turn the manual valve one full turn in each manual lever detent position. If the manual valve binds against the actuating pin in any detent position, loosen the valve body attaching bolts and move the valve body away from the center of the case. Move the body only enough to relieve the binding. Torque the attaching bolts and recheck the manual valve for binding.

7. Install the lubrication tube in the rear pump and the regulator body.

8. Torque the control body attaching bolts and the front servo attaching bolts to specifications.

FRONT SERVO ADJUSTMENT

1. Loosen the front servo adjusting screw lock nut, and then back the nut off three turns.

2. Loosen the adjusting screw five complete turns.

3. Using the front band adjusting tools shown in Fig. 5, Part 5-2, adjust as described in Part 5-2.

REAR SERVO ADJUSTMENT

1. Loosen the adjusting screw lock nut three turns with the ¾-inch socket of the rear band adjusting wrench.

2. Back off the adjusting screw until free travel is obtained.

3. Use the special tools shown in Fig. 5, Part 5-2 and adjust as described in Part 5-2.

4. Install the fluid filter. Place a new gasket on the transmission case, and then install the pan. Install the attaching bolts and lockwashers. Torque the bolts to specification.

VACUUM DIAPHRAGM UNIT

Install the vacuum diaphragm unit, as follows, after performing the hydraulic system bench tests.

1. Position the push rod in the bore of the vacuum diaphragm unit and install the diaphragm unit and push rod as a unit. A resistance slightly greater than normal thread friction should be felt as the unit is turned into the case by hand.

2. Torque the diaphragm unit to specifications using tool FCO-24.

6 HYDRAULIC SYSTEM BENCH TESTS

After the transmission has been assembled and is ready for installation in the car, check the hydraulic system to make sure it is operating properly. These hydraulic tests can be made on the bench so that most malfunctions of the system can be corrected before the transmission is installed in the car.

TESTING TOOL INSTALLATION

1. Install a plug in the filler tube hole in the oil pan, and pour four quarts of transmission fluid into the transmission through the speeedometer gear opening.

2. Remove the vacuum diaphragm unit and the diaphragm unit push rod if these parts had been previously installed.

3. Install the bench testing tool on the transmission.

4. Remove the ⅛-inch pipe plug at the transmission case rear face or at the left-hand side of the case. Turn the front pump in a clockwise direction at 75-100 rpm until a regular flow of transmission fluid leaves the hole in the transmission case. This operation "bleeds" the air from the pump.

5. Install the pressure gauge (Tool 77820 or T57L-77820-A) as shown in Fig. 32.

PRESSURE TESTS

Turn the front pump at 75-100 rpm and note the gauge readings. The pressure readings on the bench test must be within the limits set for engine idle (Table 3, Part 5-3).

If pressure gauge readings are within limits in all selector lever positions, install the vacuum diaphragm unit and push rod, as described in Section 5. With the diaphragm unit installed, pressure gauge readings in N, D1, and D2 should increase at least 50% at a fast cranking speed.

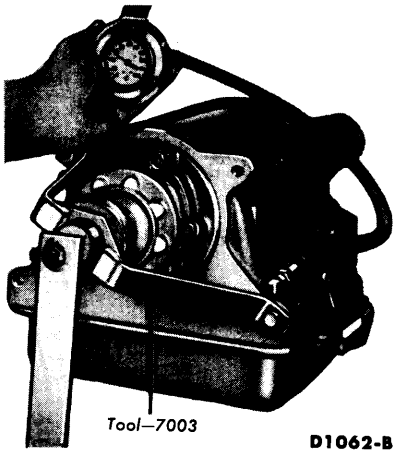

FIG. 32—Bench Testing Tool Installation

PART 5-6 CONVERTER CHECKS

The torque converter is enclosed in a welded steel housing, and cannot be disassembled for service. A special tool (Fig. 1) is provided to check turbine and stator end play and the operation of the one-way stator clutch.

TURBINE AND STATOR END PLAY CHECK

1. Insert the tool into the converter pump drive hub until it bottoms.

2. Install the guide over the converter pump drive hub.

3. Expand the split fiber bushing (Fig. 1) in the turbine spline by tightening the adjusting nut. Tighten the nut until the tool is securely locked to the spline.

4. Attach a dial indicator to the tool (Fig. 1). Position the indicator button on a converter pump drive hub lug, and set the dial face to zero.

5. Lift the tool upward as far as it will go and note the indicator reading. The indicator reading is the total end play which the turbine and stator share. If the total end play exceeds 0.060 inch, replace the converter unit.

STATOR ONE-WAY CLUTCH CHECK

1. Loosen the adjusting nut to free the split bushing, then remove the tool from the converter.

2. Install the stator outer race holding tool in one of the four holes provided in the stator (Fig. 1).

3. Insert the tool in the converter pump drive hub. As the tool enters the converter, the pins will engage the stator clutch inner race spline.

4. Place a torque wrench on the tool (Fig. 1). The tool (and stator inner race) should turn freely clockwise (from the pump drive hub side of the converter). It should lock up and hold a 10 ft-lbs pull when the wrench is turned counterclockwise. Try the clutch for lockup and hold in at least five different locations around the converter.

5. If the clutch fails to lockup and hold a 10 ft-lbs torque, replace the converter unit.

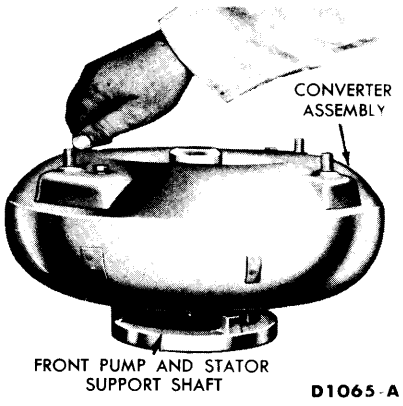

FIG. 2—Stator to Impeller Interference Check

STATOR TO IMPELLER INTERFERENCE CHECKS

1. Position a front pump assembly on a bench with the spline end of the stator shaft pointing up (Fig. 2).

2. Mount a converter on the pump so that the splines on the one-way clutch inner race engage the mating splines of the stator support, and the converter hub engages the pump drive gear.

3. While holding the pump stationary, try to rotate the converter counterclockwise. The converter should rotate freely without any signs of interference or scraping within the converter assembly.

4. If there is an indication of scraping, the trailing edges of the stator blades may be interfering with the leading edges of the impeller blades. In such cases, replace the converter.

STATOR TO TURBINE INTERFERENCE CHECK

1. Position the converter on the bench front side down.

2. Install a front pump assembly to engage the mating splines of the stator support and stator, and pump drive gear lugs.

3. Install the input shaft, engaging the splines with the turbine hub (Fig. 3).

4. While holding the pump stationary, attempt to rotate the turbine with the input shaft. The turbine should rotate freely in both directions without any signs of interference or scraping noise.

5. If interference exists, the stator front thrust washer may be worn, allowing the stator to hit the turbine. In such cases, the converter must be replaced.

CONVERTER CLEANING

The converter cannot be disassembled for cleaning. If the converter has an excessive amount of foreign material in it, a commercial cleaning machine or the following cleaning procedure should be used.

1. With the converter on the bench, remove both drain plugs and tilt the converter in all directions so that as much fluid as possible is drained.

2. Install the drain plugs and fill the converter through the pump drive hub with a light-body oil such as

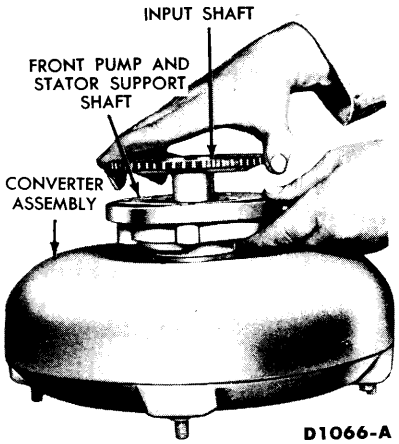

FIG. 3—Stator to Turbine Interference Check

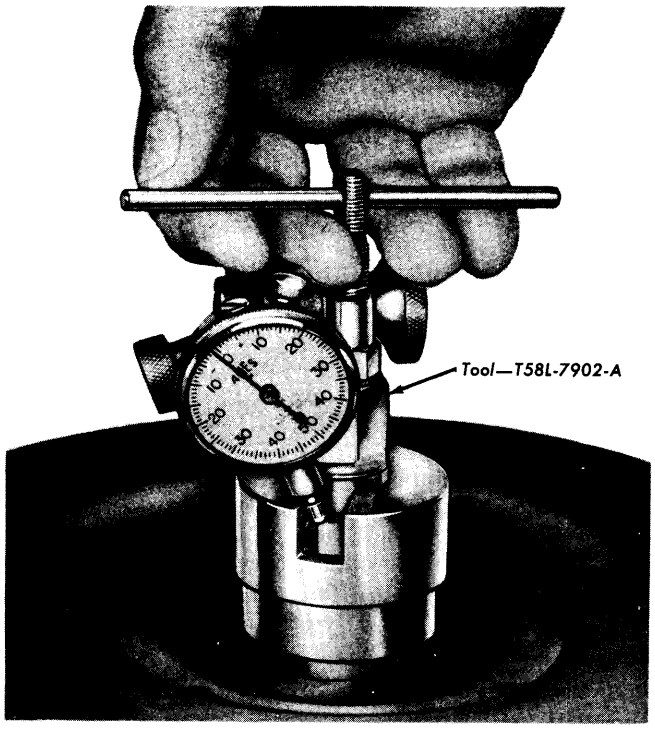

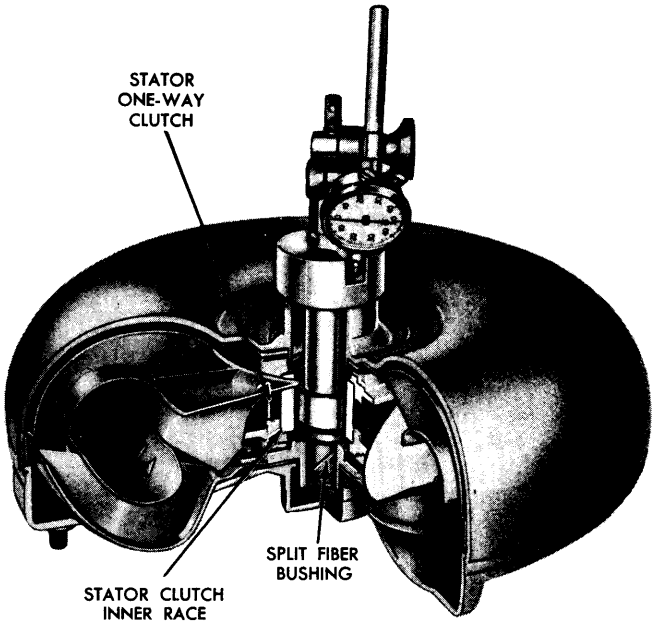

END PLAY CHECK

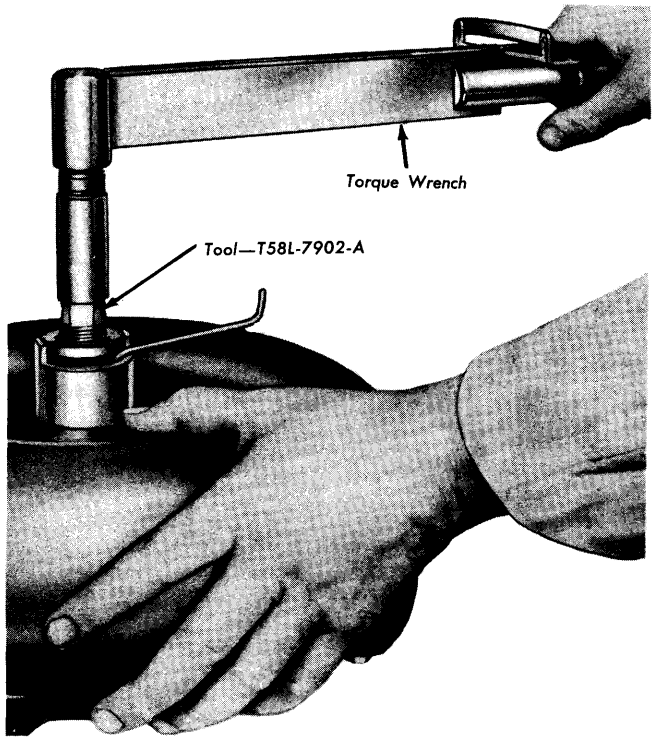

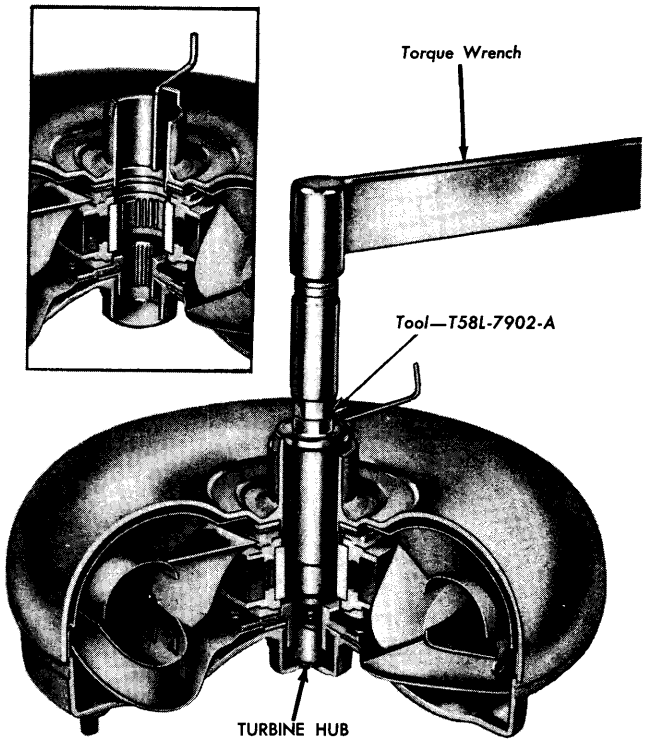

STATOR CLUTCH CHECK D1064-A

FIG. 1—Converter Checking Tool—Cruise-O-Matic

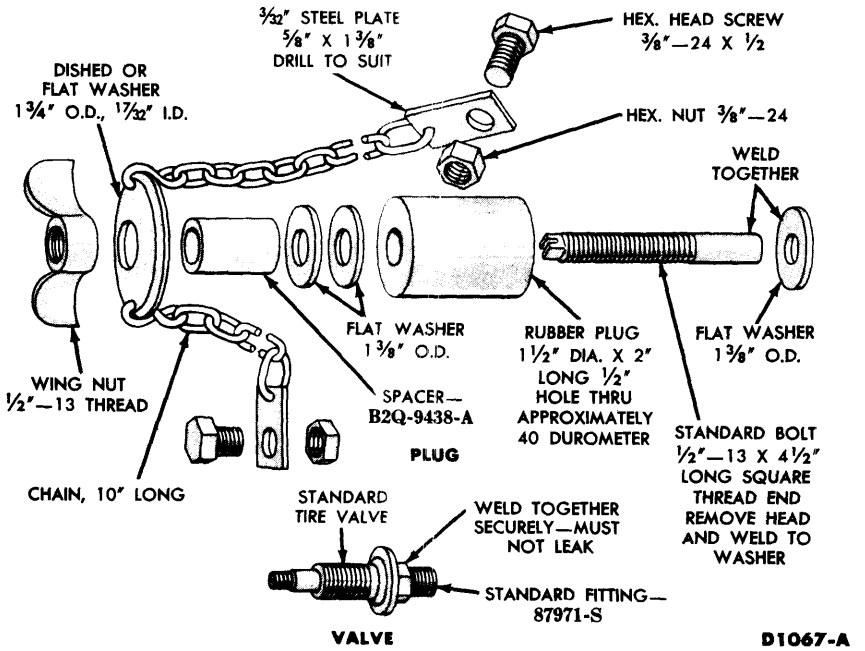

FIG. 4—Converter Leak Checking Tool

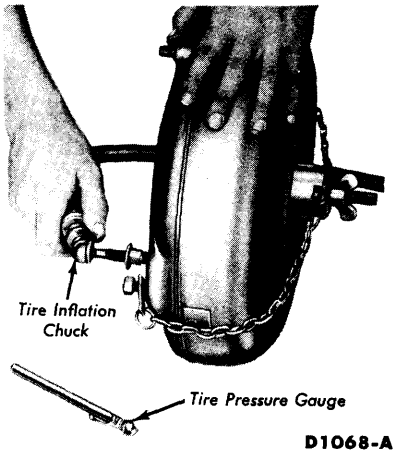

FIG. 5—Converter Leak Checking Tool Installation

kerosene, or a cleaning solvent suitable for transmission cleaning.

3. Install the tool shown in Fig. 1 in the converter. Expand the bushing in the turbine spline. Rotate the tool to circulate the fluid in the converter.

4. Remove both drain plugs and thoroughly drain the converter.

5. Repeat the procedure given in steps 2, 3, and 4, as required, to remove excessive foreign material.

6. Install the drain plugs.

LEAKAGE CHECK

If there are indications that the welds on the torque converter housing are leaking, the following check should be made before the unit is replaced.

A leak checking tool (Fig. 4) can be made from standard parts. The tool can be used to check both Cruise-O-Matic and Fordomatic converters.

1. Install the plug in the converter (Fig. 5) and expand it by tightening the wing nut. Attach the safety chains.

2. Install the air valve in one of the drain plug threads.

3. Introduce air pressure into the converter housing. Check the pressure with a tire gauge and adjust it to 20 psi.

4. Place the converter in a tank of water. Observe the weld areas for bubbles. If no bubbles are observed, it may be assumed that the welds are not leaking.

PART 5-7 SPECIFICATIONS

CONTROL PRESSURE RANGES

Manifold Vacuum HG (inches)	Engine Speed RPM	Selector Position	Gauge Reading PSI
18 Minimum	450-475	N-D1-D2	57-72
		P-R-L	57-213
16 to 13.7	As Required	D1-D2	Pressure Starts Rising
1.5 or Less	Stall	D1-D2	145-170
		R-L	201-213

TORQUE SPECIFICATIONS

Name	Foot Pounds
Converter to Flywheel Nuts	15-28
Converter Housing to Transmission Case Bolts	35-45
Front Pump to Transmission Case Bolts	17-22
Front Servo to Transmission Case Bolts	30-35
Rear Servo to Transmission Case Bolts	40-50
Planetary Support to Transmission Case Screws	20-25
Upper Valve Body to Lower Valve Body Bolts	4-6
Control Valve Body to Transmission Case Bolts	8-10
Pressure Regulator Assembly to Transmission Case Screws	17-22
Extension Assembly to Transmission Case Bolts	28-38
Oil Pan to Transmission Case Bolts	10-13
Case Assembly—Gauge Hole Plugs	7-15
Rear Band Adjusting Screw Locknut	35-40
Front Band Adjusting Screw Locknut	20-25
Manual Control Lever Nut	35-40
Downshift Lever Nut	17-20
Front Pump Cover Screws	25-35*
Rear Pump Cover Screws (¼-20)	80-90*
Rear Pump Cover Screws (10-24)	25-35*
Governor Inspection Cover Screws	50-60*
Converter Cover Drain Plug	15-28
Converter Housing to Engine Bolts	45-50
Transmission Vent Assembly	7-10
Governor Valve Body to Counterweight Screws	50-60*
Governor Valve Body Cover Screws	20-30*
Pressure Regulator Cover Screws	20-30*
Control Valve Body Screws	20-30*
Case Assembly—Oil Cover Inlet & Outlet Plugs	10-15
Front Servo Release Piston to Servo Piston Screws	20-30*
Lower Valve Body Cover Side Plate to Lower Body Cover Screws	20-30*
Vacuum Diaphragm Unit to Case	18-27†
Inhibitor Plug to Case	10-15

*Inch-Pounds †Using Tool FCO-24

TRANSMISSION GEAR RATIOS

Gear	Selector Lever Position	Clutch Applied	Band Applied	Gear Ratio
Neutral	N	None	None	—
First	D1	Front	Rear*	2.40:1
Second	D1 or D2	Front	Front	1.47:1
Third	D1 or D2	Front and Rear	None	1.00:1
Reverse	R	Rear	Rear	2.00:1

*In first gear D1, the planet carrier is held against rotation by the one-way clutch.

STALL SPEEDS

Selector Lever Position	Clutch Applied	Band Applied	Engine RPM
D2	Front	Front	1800-2000
D1	Front	One-Way Clutch	
L	Front	Rear	
R	Rear	Rear	

LUBRICANT REFILL CAPACITY

Type of Lubricant	Approximate Capacity
Ford Automatic Transmission Fluid C1AZ-19582-A	11½ Quarts (System Dry) 10 Quarts (Drain and Refill)

CHECKS AND ADJUSTMENTS

Operation	Specification
Transmission End Play Check	0.010-0.029 inch Selective Thrust Washers Available: 0.063-0.061 inch, 0.069-0.067 inch 0.076-0.074 inch, 0.083-0.081 inch
Turbine and Stator End Play Check	0.060 inch (maximum)
Front Band Adjustment (Use ¼-inch spacer between adjustment screw and servo piston stem)	Adjust screw to 10 in-lbs torque, and back off one full turn; lock nut to 20-25 ft-lbs
Rear Band Adjustment	Adjust screw to 10 ft-lbs torque, and back off 1½ turns; lock nut to 35-40 ft-lbs
Primary Sun Gear Shaft Ring End Gap Check	0.002-0.009 inch
Accelerator Pedal Height Adjustment	$3\frac{11}{16}$ inches above floor mat
Rear Clutch Steel Plate Coning Clearance Check	0.010 inch (maximum)
Output Shaft to Fluid Distributor Seal Ring End Gap	0.001 to 0.006 inch

TRANSMISSION SHIFT POINTS (APPROXIMATE)

Automatic Shift Speeds (mph)								Manual Shift Speeds (mph)
D1		D1 or D2		D1	D1 or D2	D1	D2	L
1-2 Minimum Throttle	1-2 Maximum Throttle	2-3 Minimum Throttle	2-3 Maximum Throttle	3-1 Minimum Throttle	3-2 Maximum Throttle	2-1 Maximum Throttle	3-2 Minimum Throttle	2-1
8-10	38-46	14-24	62-71	7-8	57-66	27-37	7-10	19-26

1962 FORD THUNDERBIRD SHOP MANUAL

GROUP 6

REAR AXLE AND DRIVE LINE

		PAGE
PART 6-1	REAR AXLE TROUBLE SHOOTING AND MINOR REPAIRS	6-2
PART 6-2	REAR AXLE OVERHAUL	6-7
PART 6-3	SPECIFICATIONS	6-18

PART 6-1 REAR AXLE TROUBLE SHOOTING AND MINOR REPAIRS

Section		Page
1	Trouble Shooting	6-3
2	Rear Axle Shaft, Wheel Bearing, and Oil Seal Replacement	6-4
3	Drive Pinion Oil Seal Replacement	6-5
4	Drive Line Repair	6-5

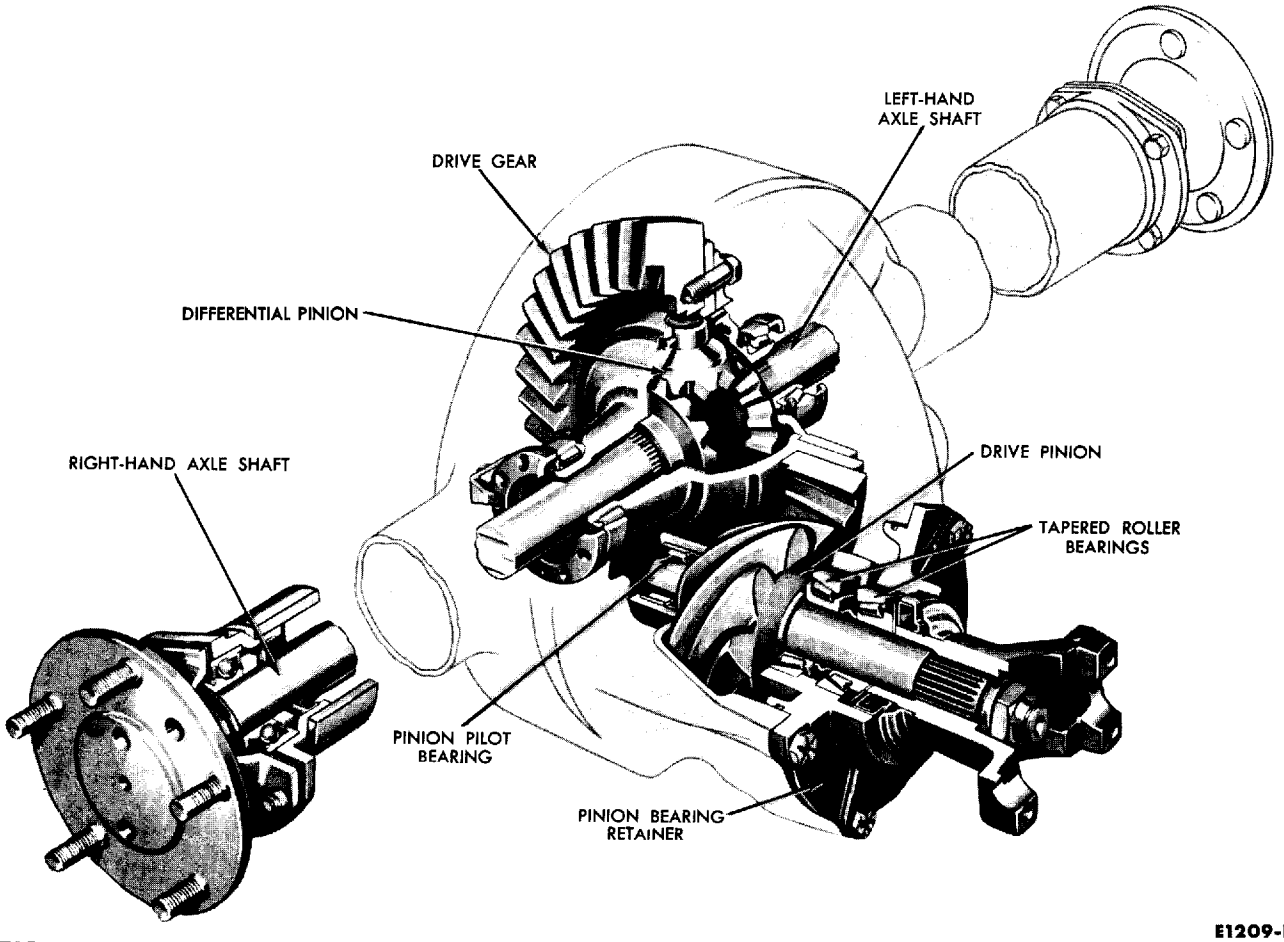

E1209-B

FIG. 1—Rear Axle Assembly

A deep-offset hypoid rear axle (Fig. 1) with a welded pressed-steel banjo housing is used on the 1962 Thunderbird. The conventional differential is standard equipment in the axle. A constant-friction Equa-Lock differential (Fig. 19, Part 6-2), which employs automatic transmission-type clutch plates to control differential action, is available as optional equipment for the rear axle.

Three dog-eared steel clutch plates are locked into the Equa-Lock differential case cover. Two bonded clutch plates are splined to a clutch hub which, in turn, is splined to the left-hand axle shaft. Two Belleville springs maintain constant pressure between the steel and bonded clutch plates so that the clutch is always engaged.

The pressure between the clutch plates opposes differential action at all times. When the car turns a corner, the clutch "slips" to allow normal differential action to take place. Under adverse weather conditions, where one or both wheels may be on a low-traction surface such as snow, ice, or mud, the friction between the clutch plates will transfer a portion of the usable torque to the wheel with the most traction. Thus, the wheel that is on ice or snow will not spin, but will have a tendency to operate with the opposite wheel in a combined driving effort.

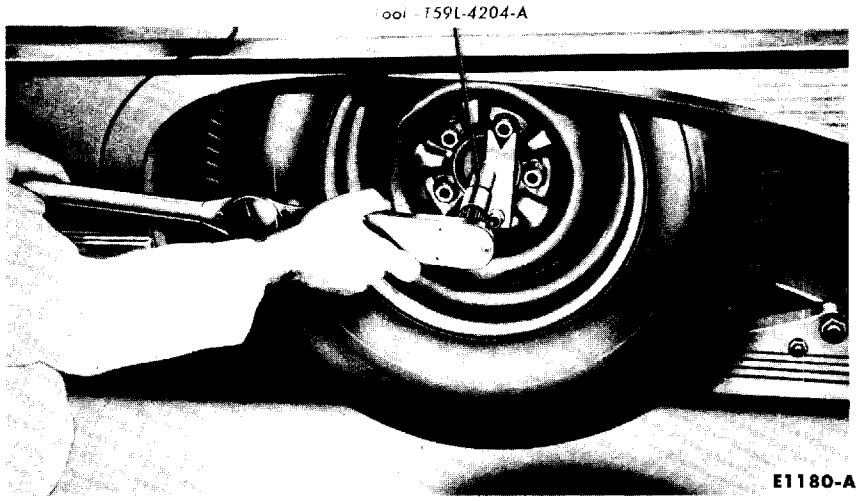

FIG. 2—Equa-Lock Differential Check

The Equa-Lock differential may be checked for proper operation without removing the carrier from the axle housing.

Jack up one rear wheel and remove the wheel cover. Then install the special tool (Fig. 2) on the end of the rear axle shaft.

Using a torque wrench of at least 200 ft-lbs capacity, rotate the axle shaft. **Be sure that the transmission is in neutral gear, one rear wheel is on the floor, and the other rear wheel is raised off the floor.** The torque required to continuously rotate the shaft should be more than 100 ft-lbs. The initial break-away torque may be higher than the continuous turning torque, but this is normal. The axle shaft should turn with even pressure throughout the check without slipping or binding.

If the torque reading is not more than 100 ft-lbs, check the differential for improper assembly.

A car equipped with an Equa-Lock differential will always have both wheels driving. If, while the car is being serviced, only one wheel is raised off the floor and the rear axle is driven by the engine, the wheel on the floor will drive the car off the stand or jack.

1 TROUBLE SHOOTING

Certain rear axle and drive line trouble symptoms are also common to the engine, transmission, tires, and other parts of the car. For this reason, be sure that the cause of the trouble is in the rear axle or drive line before adjusting, repairing, or replacing any of the axle parts.

Again, certain trouble symptoms are common to both the conventional and Equa-Lock axles, while still other symptoms are found only in the Equa-Lock axles.

To determine whether the car is equipped with a conventional or an Equa-Lock differential, check the car patent plate and the axle ratio tag. Refer to THUNDERBIRD IDENTIFICATION at the front of this manual.

REAR AXLE TROUBLE SHOOTING

EXCESSIVE REAR AXLE NOISE (ALL REAR AXLES)	Since gears are in mesh, some rear axle noise is normal. However, excessive noise often indicates the beginning of other troubles in the axle. A road test can help determine whether the noise is being caused by trouble in the rear axle or in other parts of the car. **Before road-testing the car, make sure that the tire pressures and the rear axle lubricant level are normal. Then drive the car far enough to warm the axle lubricant to its normal operating temperature.** With the car stopped and the transmission in neutral, run the engine at various speeds. If the noise still exists during this test, it probably comes from the engine or the exhaust system. To determine if the noise is being caused by the rear axle or the tires, drive the car over several different types of road surfaces. Smooth asphalt or black-top roads minimize tire noises. Tire noises may be eliminated by cross-switching the tires. Snow tires often cause noises not heard with conventional tires. Noise caused by a worn or damaged wheel bearing is often loudest when the car is coasting at low speeds, and it usually stops when the brakes are gently applied. To find the noisy bearing, jack up each wheel and check each bearing for roughness while the wheel is rotating, provided that the car is equipped with a conventional differential. If all possible external sources of noise have been checked and eliminated, and the noise still exists, road-test the rear axle under all four driving conditions—drive, cruise, float, and coast. Then remove, disassemble, and inspect the axle.

CONTINUED ON NEXT PAGE

REAR AXLE TROUBLE SHOOTING (Continued)

EXCESSIVE REAR AXLE BACKLASH (ALL REAR AXLES)	Excessive backlash in the axle driving parts may be caused by worn axle shaft splines, loose axle shaft flange nuts, loose U-joint flange mountings, excessive backlash between the drive	pinion and drive gear, excessive backlash in the differential gears, or bearings which are worn or out of adjustment.
DRIVE LINE NOISE OR VIBRATION (ALL REAR AXLES)	Excessive noise or vibration may be caused by lack of lubrication, worn U-joint bearings, missing drive shaft balance weights, and sprung or	damaged drive lines. Make the necessary repairs as required. Undercoating on the drive shaft can destroy the balance and cause vibration.
ONE WHEEL SPINS EXCESSIVELY (EQUA-LOCK ONLY)	Use the procedure given on page 6-3 for checking the Equa-Lock differential while the carrier assembly is in the car. If the torque required to rotate one rear wheel is less than	100 ft-lbs, the differential is not functioning properly. To repair the unit, the carrier assembly must be removed from the axle housing.
AXLE HAS A HIGH-PITCHED, CHATTERING NOISE ON TURNS (EQUA-LOCK ONLY)	Drive the car in a fairly tight circle, making five circles clockwise and five counterclockwise. This will permit the lubricant to work in between the clutch plates. If the noise does not disappear during this driving test, it is probable that the axle does not have the approved type lubricant. The lubricant may be checked by draining two tablespoonfuls from the axle and mixing it with an equal amount of white alcohol, such as rubbing alcohol. Mix the lubricant and alcohol thoroughly and let it stand for at least two minutes. If the sam-	ple now has a blue tint, the lubricant is correct. If it has a yellow tint, it is not the correct lubricant. **This test applies only to the approved Ford lubricant.** Drain and refill the axle with the approved lubricant. It is not necessary to flush the axle housing. After refilling the axle with specified lubricant, drive the car in fairly tight circles clockwise and counterclockwise. The chattering noise should disappear as soon as the new lubricant works in between the clutch plates.

2 REAR AXLE SHAFT, WHEEL BEARING, AND OIL SEAL REPLACEMENT

The rear axle shafts, wheel bearings, and oil seals can be replaced without removing the differential assembly from the axle housing.

1. Remove the wheel and tire from the brake drum.

2. Remove the nuts that secure the brake drum to the axle flange, and then remove the drum from the flange.

3. Working through the hole provided in the axle shaft flange, remove the nuts that secure the wheel bearing retainer. Then pull the axle shaft assembly out of the axle housing (Fig. 3). **The brake carrier plate must not be dislodged. Install one nut to hold the plate in place after the axle shaft is removed.**

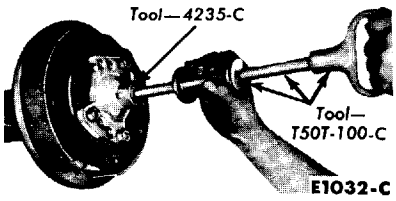

FIG. 3—Axle Shaft Removal

4. If the rear wheel bearing is to be replaced, loosen the inner retainer by nicking it deeply with a cold chisel in several places. It will then slide off easily.

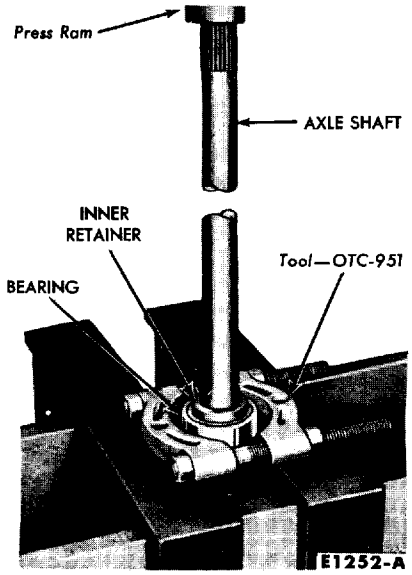

FIG. 4—Wheel Bearing Removal

5. Remove the bearing from the axle shaft with the tool shown in Fig. 4.

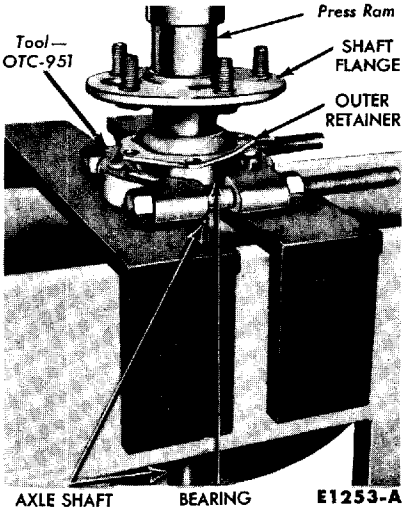

FIG. 5—Wheel Bearing Installation

6. Inspect the machined surface of the axle shaft and the axle housing for rough spots or other irregularities which would affect the sealing action of the oil seal. Carefully remove any burrs or rough spots.

7. Lightly coat the wheel bearing bores with ball joint grease.

8. Press a new rear wheel bearing on the axle shaft (Fig. 5). **Be sure that the inner race of the bearing is supported by the tool as the shaft is pressed through the bearing. The bearing should seat firmly against the shoulder on the shaft.**

9. Adjust the same tool to support the bearing inner retainer, then press the shaft through the retainer until the retainer seats firmly against the bearing.

10. If the axle shaft oil seal is to be replaced, remove the seal with tool 1175AB. Soak new seals in SAE 10 oil for ½ hour before use. Install the new seal with tool 1177 or 1177-N. Wipe a small amount of an oil resistant sealer on the outer edge of the seal before it is installed.

11. Place a new gasket on each side of the brake carrier plate, and then slide the axle shaft into the housing. Start the axle splines into the side gear, and push the shaft in until the bearing bottoms in the housing.

12. Install the bearing retainer and the nuts that secure it. Torque the nuts to specification.

13. Install the brake drum and the drum retaining nuts.

14. Install the wheel and tire on the drum.

3 DRIVE PINION OIL SEAL REPLACEMENT

The drive pinion oil seal can be replaced without removing the differential assembly from the axle housing. Soak new seals in SAE 10 oil for ½ hour before use.

1. Remove the pinion bumper bracket from the carrier housing. Disconnect the drive shaft from the drive pinion flange.

2. Mark the pinion shaft nut, the end of the pinion shaft, and the U-joint flange inner surface for realignment.

3. Hold the flange with the tool shown in Fig. 9, Part 6-2. Remove the pinion nut and the flat washer.

4. Clean the carrier housing around the drive pinion flange oil seal. Place a drain under the seal, or raise the front of the car higher than the rear.

5. Remove the U-joint flange carefully (Fig. 10, Part 6-2) to avoid later misalignment of the drive shaft.

6. Using the tool shown in Fig. 11, Part 6-2, remove the drive pinion flange oil seal.

7. Clean the oil seal seat.

8. Coat the outer edge of the new seal with oil resistant sealer, and install the seal, using the tool shown in Fig. 29, Part 6-2.

9. Align the U-joint flange spline mark with the pinion shaft spline mark and install the flange (Fig. 30, Part 6-2).

10. Install the flat washer and the pinion shaft nut. Tighten the nut until the marks are aligned (see step 2).

11. Connect the drive shaft to the pinion flange.

12. Check the lubricant level. If additional lubricant is required refer to Group 12 for the proper type.

4 DRIVE LINE REPAIR

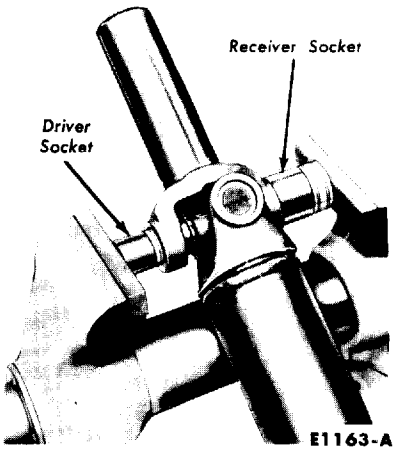

FIG. 6—U-Joint Removal

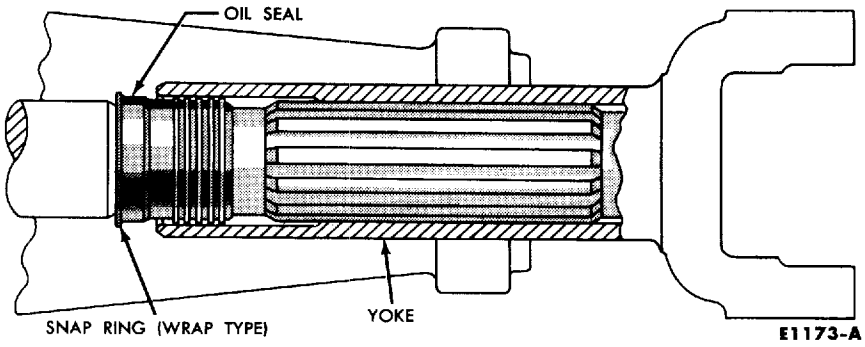

FIG. 7—Output Shaft Spline Seal

All drive shafts are balanced. Therefore, if the car is to be undercoated, cover the drive shaft to prevent undercoating material getting on the shaft or U-joints.

To inspect or replace U-joints, follow this procedure.

1. Disconnect the rear U-joint from the drive pinion flange. Pull the drive shaft toward the rear of the car until the front U-joint yoke clears the transmission extension housing and the seal.

2. Remove the snap rings which retain the bearings in the yoke and drive shaft.

3. Place the U-joint in a vise or under a press.

4. Select a socket slightly smaller in its outside diameter than the U-joint bearings. Select another socket slightly larger in its inside diameter than the bearing outside diameter.

5. Place the sockets at opposite bearings so that the smaller socket becomes a bearing driver and the larger socket becomes a bearing receiver when the vise jaws come to-together (Fig. 6).

6. Close the vise jaws until both bearings are free of the yoke. Remove the bearings from the spider.

7. Turn the spider ¼ turn and use the same procedure to press the bearings out of the shaft.

8. If new U-joint bearings are being installed, **check the new bearings for adequate grease.**

9. With the smaller socket press one bearing part way into place in the drive shaft.

10. Position the new spider in the partially installed bearing. Install the spider with the grease fitting toward the drive shaft tube.

11. Press the second bearing into place in the drive shaft. Press the first bearing all the way in. Install the bearing retaining snap ring for each bearing.

12. Press one new bearing part way into the yoke.

13. Install the yoke on the spider and press the second yoke bearing into place. Press the first bearing all the way in. Install the snap ring for each bearing.

14. Use the same procedure to remove and replace the rear U-joint spider and bearings.

Check the joints for freedom of movement. If a bind has resulted from misalignment during the foregoing procedures, tap the ears of the drive shaft sharply to relieve the bind. Do not install the drive shaft unless the universal joints are free of bind.

15. If the rubber seal installed on the end of the transmission extension housing is damaged in any manner, install a new seal.

16. Lubricate the yoke spline with special spline lubricant (Part 12-1). This spline is sealed so that the transmission fluid does not "wash" away the spline lubricant (Fig. 7). Install the yoke on the transmission output shaft.

17. Install the U-bolts and nuts which attach the U-joint to the drive pinion flange.

18. Lubricate the front and rear U-joints as specified in Group 12.

PART 6-2 REAR AXLE OVERHAUL

Section		Page
1	Differential Carrier Replacement	6- 7
2	Differential Carrier Disassembly and Assembly	6- 7
3	Drive Pinion and Drive Gear Adjustments	6-15

1 DIFFERENTIAL CARRIER REPLACEMENT

REMOVAL

1. Place a drain pan under the carrier and housing to catch the old lubricant, when the carrier is separated from the housing.

2. Use a wire brush to clean dirt from the area around the carrier and housing mating surfaces (Fig. 1). Then wipe the area clean with a cloth dampened with solvent.

3. Remove the axle shaft (Fig. 3, Part 6-1) and the drive shaft.

4. Remove the nuts which attach the differential carrier to the housing, and then remove the carrier from the housing.

INSTALLATION

After the gear tooth pattern has been checked and is satisfactory, install the differential carrier in the axle housing. Use a new carrier to housing gasket.

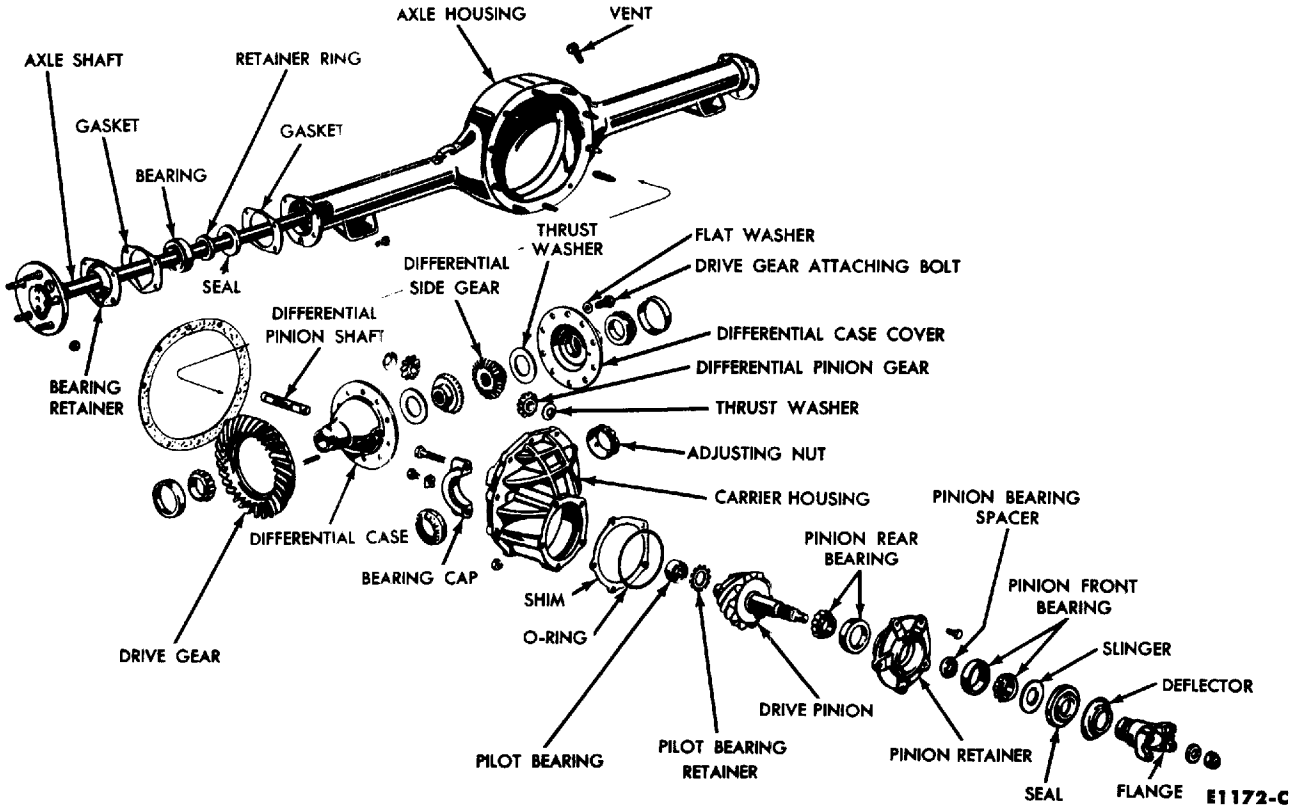

FIG. 1—Rear Axle—Disassembled

2 DIFFERENTIAL CARRIER DISASSEMBLY AND ASSEMBLY

INSPECTION BEFORE DISASSEMBLY

The differential carrier should be inspected before any parts are removed from it, and it should also be inspected as it is disassembled. These inspections can help to find the cause of the trouble and to determine the corrections needed.

Mount the carrier in the holding fixture shown in Fig. 2. Wipe the lubricant from the internal working

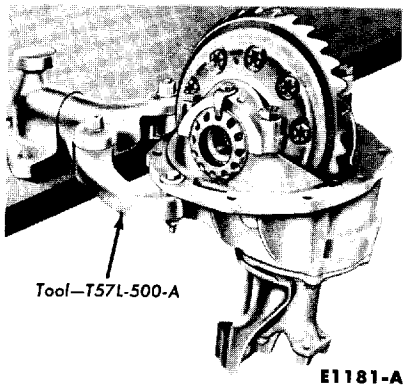

FIG. 2—Bench Fixture For Carrier Overhaul

parts, and visually inspect the parts for wear or damage.

Rotate the gears to see if there is any roughness which would indicate

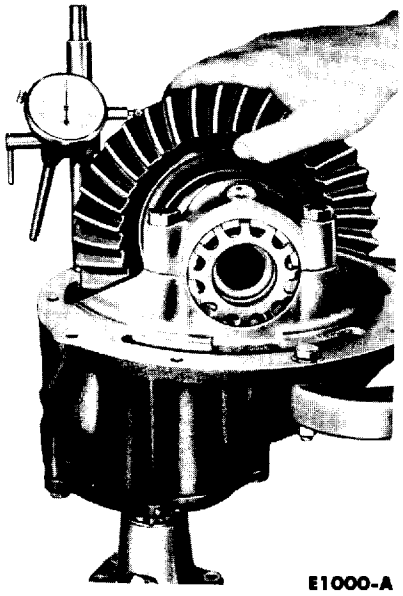

FIG. 3—Backlash Check

defective bearings or chipped gears. Check the gear teeth for scoring or signs of abnormal wear.

Set up a dial indicator (Fig. 3) and check the backlash at several points around the drive gear. Backlash should be within specification.

If no obvious defect is noted, check the gear tooth contact. Paint the gear teeth with suitable gear marking compound, such as a paste made with dry red lead and oil. A mixture that is too wet will run and smear. Too dry a mixture cannot be pressed out from between the teeth. As shown in Fig. 4, wrap a cloth around the drive pinion flange to act as a brake.

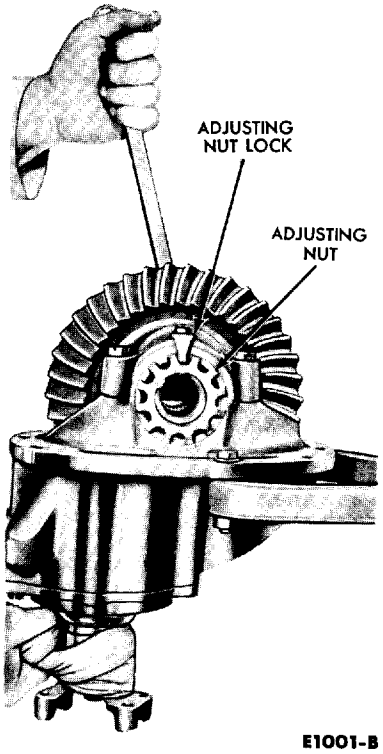

FIG. 4—Gear Tooth Contact Check

Rotate the drive gear back and forth (use a box wrench on the drive gear attaching bolts for a lever) until a clear tooth contact pattern is obtained.

Certain types of gear tooth contact patterns on the drive gear indicate incorrect adjustment. Noise caused by incorrect adjustment can often be corrected by readjusting the gears. Typical patterns and the necessary corrections are explained in the assembly procedures.

Gear tooth runout can sometimes be detected by an erratic pattern on the teeth. However, a dial indicator should be used to measure the runout of the back face of the drive gear, as shown in Fig. 5. This runout should not exceed 0.003 inch.

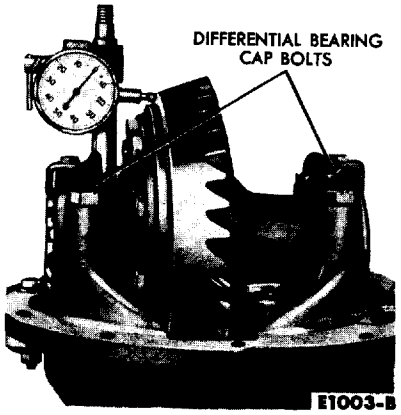

FIG. 5—Drive Gear Runout Check

Loosen the differential bearing cap bolts, and then torque to 25 ft-lbs. Remove the adjusting nut locks. Carefully loosen one of the adjusting nuts to determine if any differential bearing preload remains. If at least one notch of preload remains, the differential bearings may be re-used, provided they are not pitted or damaged.

DISASSEMBLY OF CONVENTIONAL DIFFERENTIAL CARRIER

1. Mark one differential bearing cap and the mating bearing support to help position the parts properly

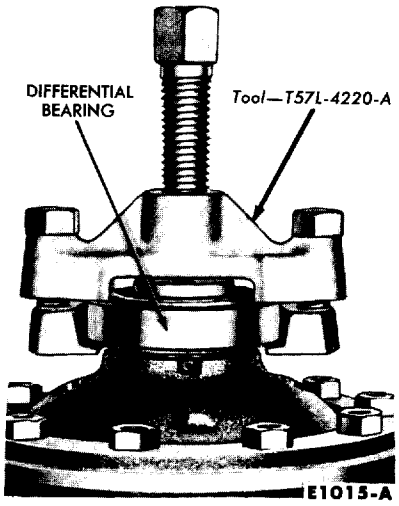

FIG. 6—Differential Bearing Removal

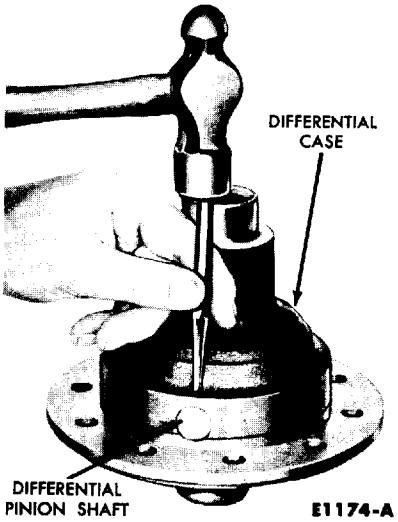

FIG. 7—Differential Pinion Shaft Retainer Removal

during assembly of the carrier.

2. Remove the adjusting nut locks, bearing caps, and adjusting nuts. Then lift the differential assembly out of the carrier.

3. If the differential bearings are to be removed, use the tool shown in Fig. 6.

4. Remove the bolts that attach the drive gear to the differential case. Press the drive gear from the case or tap it off with a soft-faced hammer.

5. With a drift, drive out the differential pinion shaft retainer (Fig. 7), and separate the 2-piece differential case.

6. Drive out the pinion shaft (Fig. 8) with a brass drift. Remove the gears and thrust washers.

7. Turn the carrier case upright, and remove the pinion shaft nut (Fig. 9). Then remove the U-joint flange (Fig. 10).

8. Remove the seal (Fig. 11) and the slinger.

9. Remove the pinion shaft and bearing retainer from the carrier housing. Measure the shim thickness with a micrometer. Record this original shim thickness. If a new gear set is installed during assembly, a new shim will have to be installed. The original shim thickness is one of the factors necessary in calculating the new shim thickness. **Extreme care must be taken not to damage the mounting surfaces of the retainer and carrier.**

10. If the pilot bearing is to be replaced, use the tool shown in Fig. 12 to drive the pilot bearing and the bearing retainer out together. To install the bearing, use the same tool (Fig. 13), and drive the bearing in until it bottoms. With the same tool, install a **new** retainer with the concave side up.

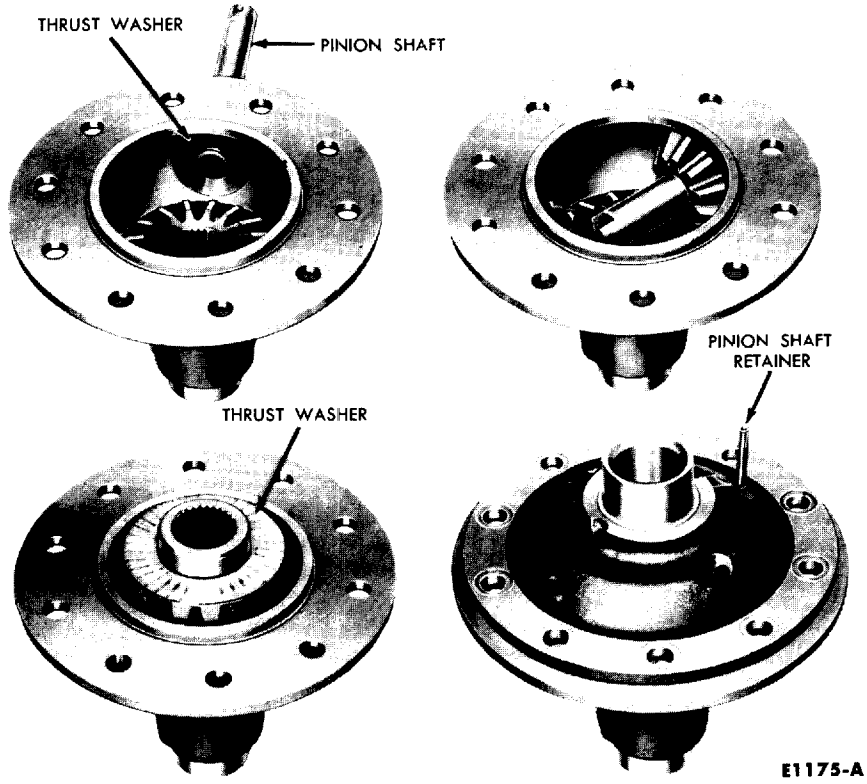

FIG. 8—Assembly of Differential Case

11. Place a protective sleeve (hose) on the pinion pilot bearing surface. Press the pinion shaft out of the pinion front bearing cone (Fig. 14).

12. Remove the pinion rear bearing cone (Fig. 15).

13. Do not remove the pinion bearing cups from the retainer unless the cups are worn or damaged. The flange and pilot of the retainer are machined during manufacture by locating on these cups after they are installed in their bores. If the cups are worn or damaged, they may be removed and replaced as shown in Figs. 16 and 17.

After the new cups are installed, make sure they are seated in the retainer by trying to insert a 0.0015-

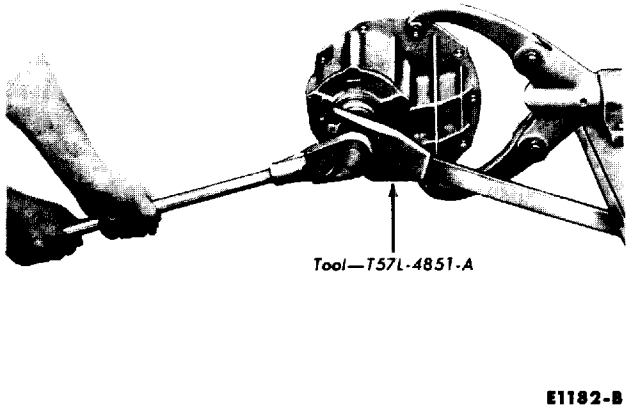

FIG. 9—Pinion Shaft Nut Removal

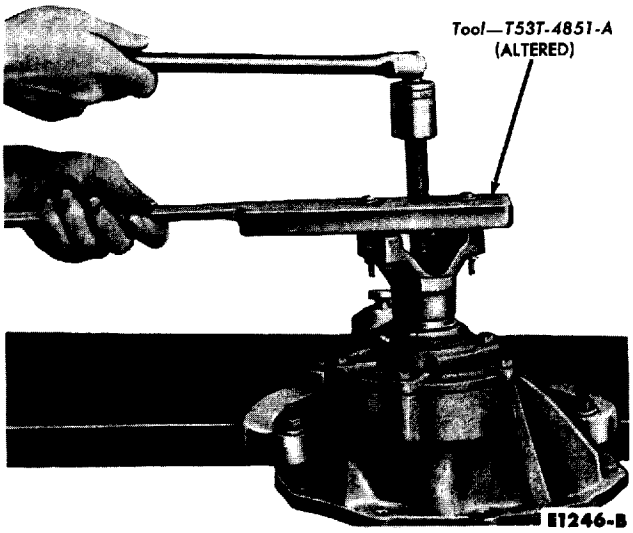

FIG. 10—U-Joint Flange Removal

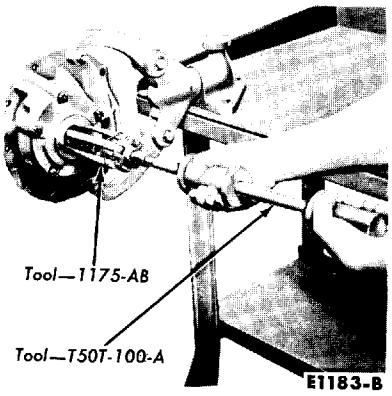

FIG. 11—Pinion Seal Removal

inch feeler gauge between the cup and the bottom of the bore.

DISASSEMBLY OF EQUA-LOCK DIFFERENTIAL CARRIER

1. Mark one differential bearing cap and the mating bearing support to help position the parts properly during assembly of the carrier.
2. Remove the adjusting nut locks, bearing caps, and adjusting nuts. Then lift the differential assembly out of the carrier.
3. Remove the differential bearings (Fig. 6).
4. Loosen **alternate** drive gear attaching bolts **evenly** to release the spring pressure between the differential case and cover. A hydraulic press may be used to contain the spring pressure while the bolts are removed. Apply about one ton pressure across the case bearing hubs while the drive gear bolts are removed.
5. Remove the differential case cover, and then remove the drive gear.
6. Remove the two Belleville springs.
7. Remove the steel and the bonded clutch plates.
8. Remove the differential clutch hub, side gear, and thrust washer.
9. Remove the drive gear from the differential case.
10. Drive out the differential pinion shaft lock pin.
11. With a punch, drive out the differential pinion shaft. Then remove the pinion gears and thrust washers.
12. To disassemble the remaining carrier parts, use the procedure given under "DISASSEMBLY OF CONVENTIONAL DIFFERENTIAL CARRIER."

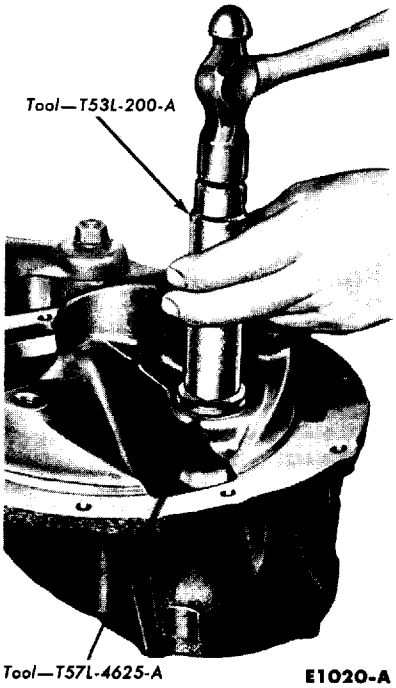

FIG. 12—Pilot Bearing Removal

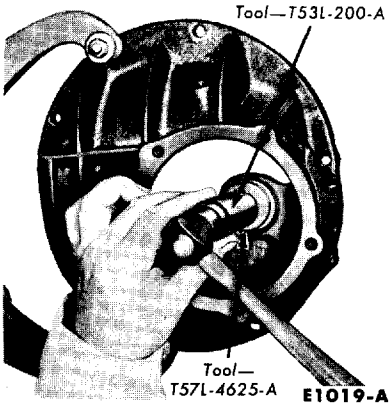

FIG. 13—Pilot Bearing Installation

INSPECTION AFTER DISASSEMBLY

Thoroughly clean all parts. **Always use clean solvent when cleaning bearings.** Oil the bearings immediately to prevent rusting. Inspect the parts for defects. Clean the inside of the carrier before rebuilding and assembling the parts. Inspect individual parts as outlined below.

GEARS

Examine the pinion and drive gear teeth for scoring or excessive wear. Extreme care must be taken not to damage the pilot bearing surface of the pinion.

The pattern taken during disassembly should be helpful in judging if gears can be reused. Worn gears cannot be rebuilt to correct a noisy condition. Gear scoring is the result of excessive shock loading or the use of an incorrect lubricant. Scored gears cannot be reused.

Examine the teeth and thrust surfaces of the differential gears. Wear on the hub of the differential gear can cause a "chucking" noise known as "chuckle" when the car is driven at low speeds. Wear of splines, thrust surfaces, or thrust washers can contribute to excessive drive line backlash.

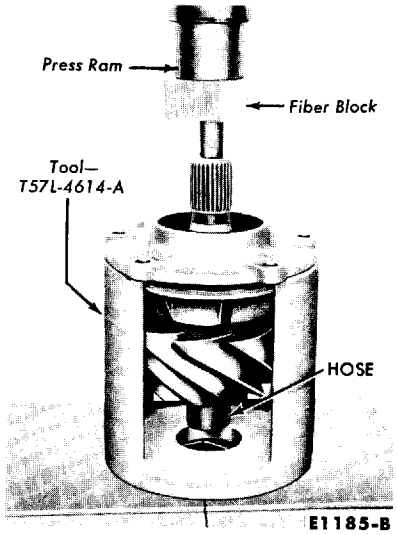

FIG. 14—Pinion Front Bearing Cone Removal

BEARING CUPS

Check bearing cups for rings, scores, galling, or erratic wear patterns. Pinion cups must be solidly seated. Check by attempting to insert a 0.0015-inch feeler between these cups and the bottoms of their bores.

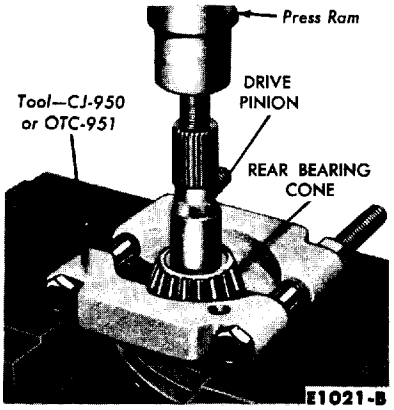

FIG. 15—Pinion Rear Bearing Cone Removal

CONE AND ROLLER ASSEMBLIES

When operated in the cups, these parts must turn without roughness. Examine the roller ends for wear. Step-wear on the roller ends indicates the bearings were not preloaded properly or the rollers were slightly misaligned.

DIFFERENTIAL BEARING ADJUSTING NUTS

Temporarily install the bearing caps and test the fit of the adjusting nuts in their threads. The nuts should turn easily when the caps are tightened to specification. The faces of the nuts that contact the bearing cups must be smooth and square. Polish these with a fine abrasive on a flat surface. Replace the nuts or examine the threads in the carrier if their fit is not proper. Be sure that the bearing caps are on the side they were machined to fit.

U-JOINT FLANGE

Be sure that the ears of the flange have not been damaged in removing the drive shaft or in removing the flange from the axle. The end of the flange that contacts the oil slinger must be smooth. Polish this face if necessary. Roughness aggravates backlash noises, and causes wear of the slinger with a resultant loss in pinion bearing preload.

PINION RETAINER

Be sure that the pinion bearing cups are seated. Remove any chips or burrs from the mounting flange. Clean the groove for the O-ring seal and all lubricant passages. If the cups were removed, examine the bores carefully. Any nicks or burrs in these bores must be removed to permit proper seating of the cups.

CARRIER HOUSING

Make sure that the differential bearing bores are smooth and the threads are not damaged. Remove any nicks or burrs from the mounting surfaces of the carrier housing.

DIFFERENTIAL CASE

Make sure that the hubs where the bearings mount are smooth. Check the fit of the differential gears in the counterbores. Carefully examine the thrust surface, which may have been damaged when the bearings were removed. The bearing assemblies will fail if they do not seat firmly on the hubs. Be sure that the mating surfaces of the two parts of the case are smooth and free from nicks or burrs.

EQUA-LOCK DIFFERENTIAL PARTS

Inspect the clutch plates for uneven or extreme wear. The dog-eared clutch plates must be free from burrs, nicks, or scratches which could cause excessive or erratic wear to the bonding material of the internally splined clutch plates. The internally splined clutch plates should be inspected for condition of the bond, bonding material, and wear. Replace the bonded plates if their thickness is less than 0.085 inch or if the bonded material is scored or badly worn. Inspect the bonded plate internal teeth for wear. Replace them if excessive wear is evident.

Examine all thrust surfaces and hubs for wear. Abnormal wear on these surfaces can contribute to a noisy axle.

Inspect the Belleville springs for proper free height of ¼ inch.

ASSEMBLY OF CONVENTIONAL DIFFERENTIAL CASE

1. Place a side gear and thrust washer in the differential case bore (Fig. 8). **Lubricate all differential parts liberally with axle lubricant during assembly.**

2. With a soft-face hammer, drive the pinion shaft into the case only far enough to retain a pinion thrust washer and pinion gear.

3. Place the second pinion and thrust washer in position, and drive the pinion shaft into place. **Carefully line up the pinion shaft retainer holes.**

4. Place the second side gear and thrust washer in position (Fig. 8), and install the cover of the differential case. Install the retainer. A pinion or axle shaft spline can be inserted in the side gear spline to check for free rotation of the differential gears.

5. Insert two 7/16 (N.F.) bolts two inches long through the differential flange, and thread them three or four turns into the drive gear as a guide in aligning the drive gear bolt holes.

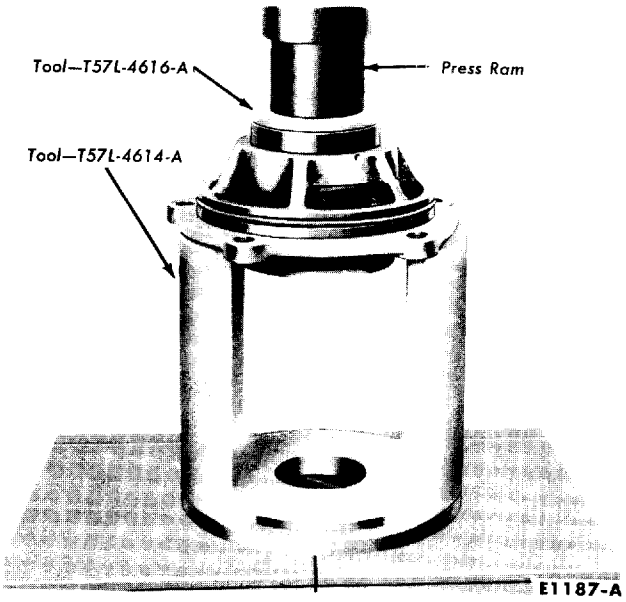

FIG. 16—Pinion Bearing Cup Removal

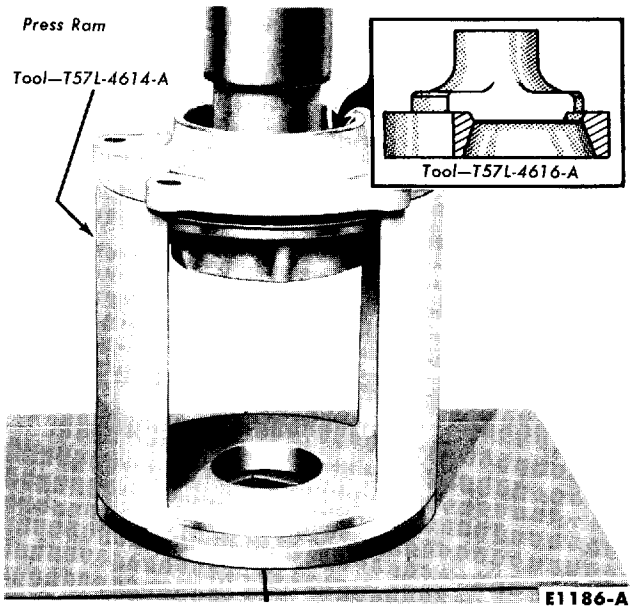

FIG. 17—Pinion Bearing Cup Installation

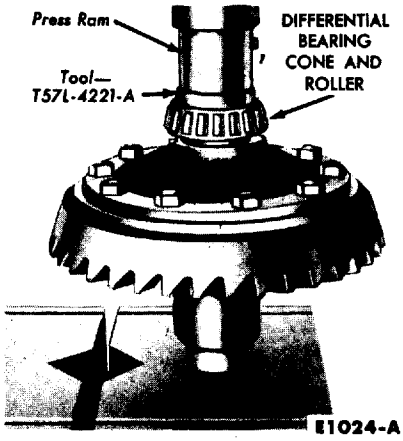

FIG. 18—Differential Bearing Installation

Press or tap the drive gear into position.

6. Install and tighten the drive gear bolts and washers evenly, and torque them alternately across the gear to specification.

7. If the differential bearings have been removed, press them on as shown in Fig. 18.

ASSEMBLY OF EQUA-LOCK DIFFERENTIAL CASE

1. Refer to Fig. 19.

2. Place the side gear and thrust washer in the differential case. **Lubricate all parts liberally with axle lubricant during assembly.**

3. With a soft-faced hammer, drive the pinion shaft into the case only far enough to retain a pinion thrust washer and pinion gear.

4. Place the second pinion and thrust washer in position, and drive the pinion shaft into place. **Carefully line up the pinion shaft retainer holes.**

5. Place the second pinion and thrust washer in position. Drive the pinion shaft into place. Install the pinion shaft retainer. **The retainer must not extend beyond the machined surface of the case.**

6. Insert two 2-inch 7/16 (N.F.) bolts through the differential flange, and thread them three or four turns into the drive gear as a guide in aligning the drive gear bolt holes. Press or tap the drive gear into position.

7. Clamp the differential case in a soft-jawed vise. Install the differential side gear on the differential pinion gears. Place the clutch hub on the side gear. Place the thrust washer on the hub (Fig. 20).

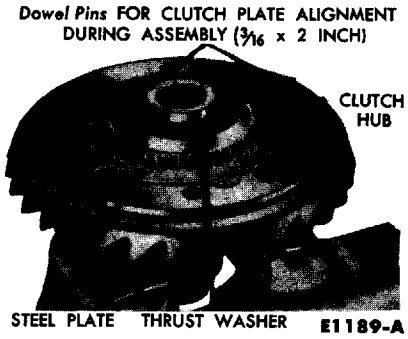

FIG. 20—Clutch Plate Installation

8. To align the clutch plates during assembly, insert two 3/16 x 2 dowel pins into the differential case. Place a steel plate on the differential case so that the slots in the dog ears straddle the dowel pin (Fig. 20). **Lubricate all the Equa-Lock differential parts with axle lubricant so that an accurate torque check can be made.**

9. Place a bonded plate on the steel plate. Make sure the bonded plate inner spline teeth properly engage the hub spline. Assemble the remaining plates: a steel plate, a bonded plate, and lastly a steel plate.

10. Place the two Belleville springs on the top steel plate. Both Belleville springs are assembled with their concave sides down (Fig. 21). Carefully center the Belleville springs so that they will fit into the cover.

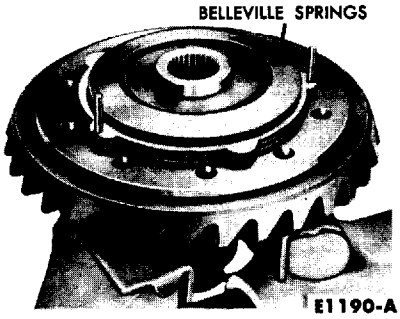

FIG. 21—Belleville Spring Installation

11. Place the differential case cover on the case (Fig. 22). Start the drive gear bolts.

12. Tighten the bolts evenly and alternately across the diameter of the drive gear. As the bolts are tightened the Belleville springs are compressed and the differential case and cover are pulled together.

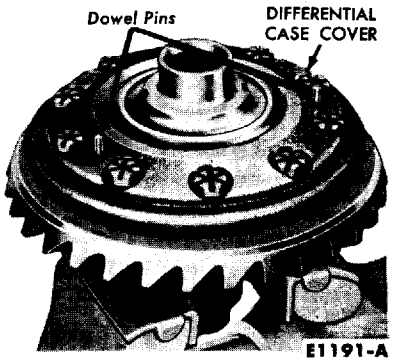

FIG. 22—Differential Cover Installation

13. Remove the dowel pins.

14. Torque the case to drive gear bolts to specification.

15. Check the torque required to rotate one side gear while the other side gear is held (Fig. 23). Ignore the

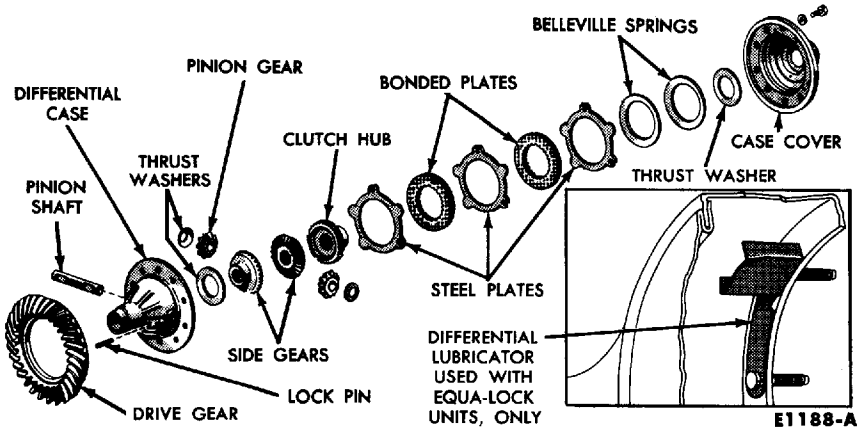

FIG. 19—Equa-Lock Differential Assembly

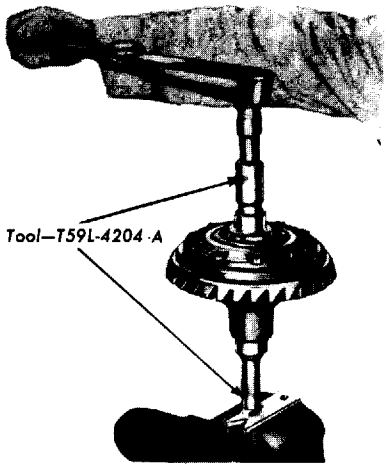

FIG. 23—Differential Torque Check

torque required to start the side gear turning. The torque required to keep it moving steadily should be between 155 and 195 ft-lbs, if new clutch plates were installed. The torque should be over 100 ft-lbs, if the original clutch plates were installed. If the required torque is not within these limits, check for improper assembly.

16. Procedures and specifications for installing the Equa-Lock differential in the carrier are the same as those for the conventional differential installation.

SHIM SELECTION

Individual differences in machining the carrier housing and the gear set require a shim between the pinion retainer and the carrier housing to locate the pinion for correct tooth contact with the drive gear. In order

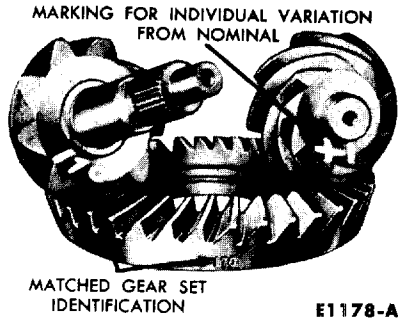

FIG. 24—Pinion and Drive Gear Markings

to adjust the shim pack to the correct thickness for a given gear set, each pinion gear is marked with an adjustment number such as the +1 marking in Fig. 24.

When replacing a drive gear and pinion it should be noted that the original factory installed shim is of the correct thickness to adjust for individual variations in both the carrier housing dimension and in the original gear set dimension; therefore, to select the correct shim thickness for the new gear set to be installed, follow these steps:

1. Measure the thickness of the **original shim** with a micrometer.

2. Note the shim adjustment number on both the old pinion and the new pinion.

3. Refer to Table 1 to determine the correct amount of shim thickness change. The amount shown in Table 1 under the old pinion shim adjustment number and in line with the new pinion number is the amount of **change** that should be made to the **original** shim thickness.

If the old pinion is marked +4, for example, and the new pinion is marked −2, the table indicates that 0.006 inch of shim stock should be removed from the **original** shim pack.

If the **original** shim pack was lost or if a new carrier housing is being installed, substitute a **nominal** 0.020 inch shim for the **original,** and follow the foregoing procedure for a trial build-up. If any further shim change is necessary, it will be indicated in the tooth pattern check.

A new drive gear and pinion should always be installed in an axle as a matched set (never separately). **Be sure that the same matching number appears on both the drive pinion and the drive gear.** Note the number "170" in Fig. 24.

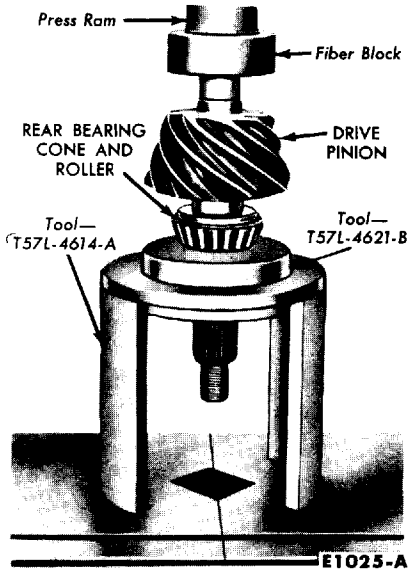

FIG. 25—Pinion Rear Bearing Cone Installation

TABLE 1—Drive Pinion Adjusting Shim Thickness Change (Inches)

New Pinion Marking	Old Pinion Marking								
	−4	−3	−2	−1	0	+1	+2	+3	+4
+4	+0.008	+0.007	+0.006	+0.005	+0.004	+0.003	+0.002	+0.001	0
+3	+0.007	+0.006	+0.005	+0.004	+0.003	+0.002	+0.001	0	−0.001
+2	+0.006	+0.005	+0.004	+0.003	+0.002	+0.001	0	−0.001	−0.002
+1	+0.005	+0.004	+0.003	+0.002	+0.001	0	−0.001	−0.002	−0.003
0	+0.004	+0.003	+0.002	+0.001	0	−0.001	−0.002	−0.003	−0.004
−1	+0.003	+0.002	+0.001	0	−0.001	−0.002	−0.003	−0.004	−0.005
−2	+0.002	+0.001	0	−0.001	−0.002	−0.003	−0.004	−0.005	−0.006
−3	+0.001	0	−0.001	−0.002	−0.003	−0.004	−0.005	−0.006	−0.007
−4	0	−0.001	−0.002	−0.003	−0.004	−0.005	−0.006	−0.007	−0.008

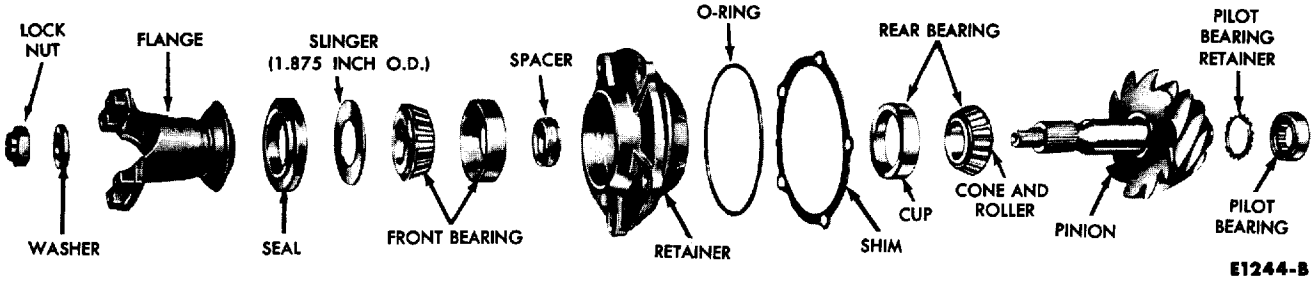

FIG. 26—Pinion and Bearing Retainer

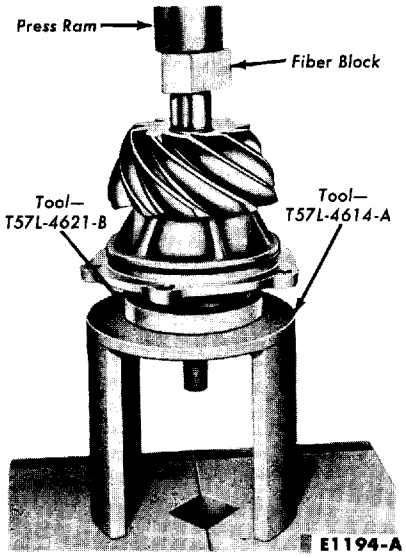

FIG. 27—Pinion Front Bearing Installation

ASSEMBLY AND INSTALLATION OF DRIVE PINION AND BEARING RETAINER

1. Install the drive pinion rear bearing cone and roller on the pinion shaft (Fig. 25). Place a new spacer on the pinion shaft (Fig. 26).

2. Place the bearing retainer on the pinion shaft, and install the front bearing cone and roller. Press the front bearing cone and roller into position as shown in Fig. 27. Be careful not to crush the bearing spacer.

3. Lubricate the O-ring with axle lubricant and install it in its groove in the pinion retainer. Be careful not to twist it.

4. Place the proper shim on the carrier housing and install the pinion and retainer (Fig. 28).

5. Install the pinion retainer bolts. Torque the bolts to specification.

6. Place the slinger on the pinion shaft.

7. Coat the outside edge of a new oil seal with an oil resistant sealer and install it in the bearing retainer (Fig. 29). Soak new seals in SAE 10 oil for ½ hour before use.

8. Install the U-joint flange (Fig. 30).

9. Place the flat washer over the pinion shaft and start the pinion shaft nut.

10. Hold the flange (Fig. 9) and tighten the pinion shaft nut until the torque required to turn the pinion shaft is 8-12 in-lbs (used bearings) or 17-27 in-lbs (new bearings). As the pinion shaft nut is tightened, rotate the pinion shaft frequently to allow the bearing to seat. Check the bearing preload as shown in Fig. 31.

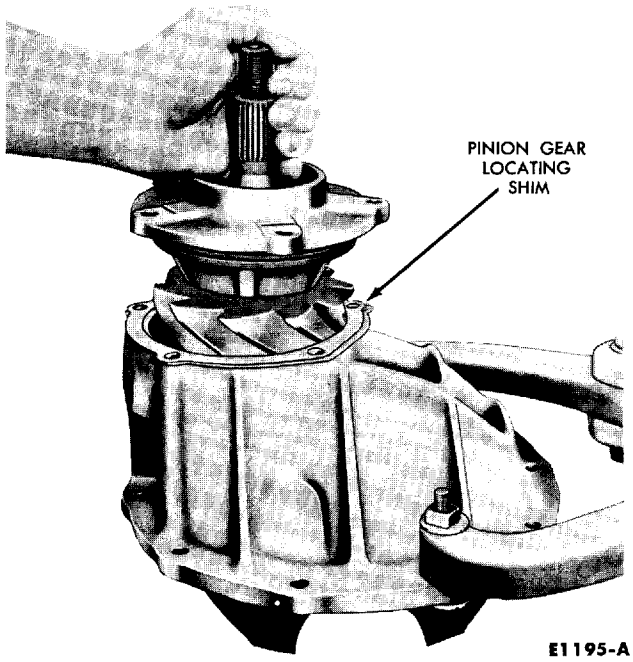

FIG. 28—Pinion and Retainer Installation

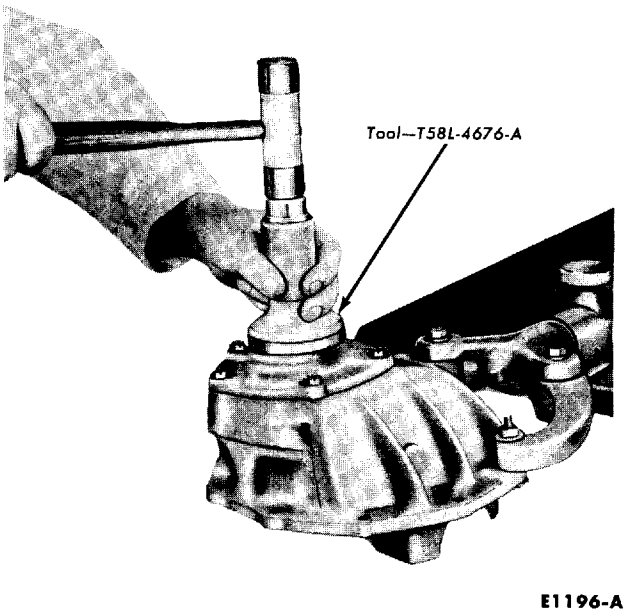

FIG. 29—Oil Seal Installation

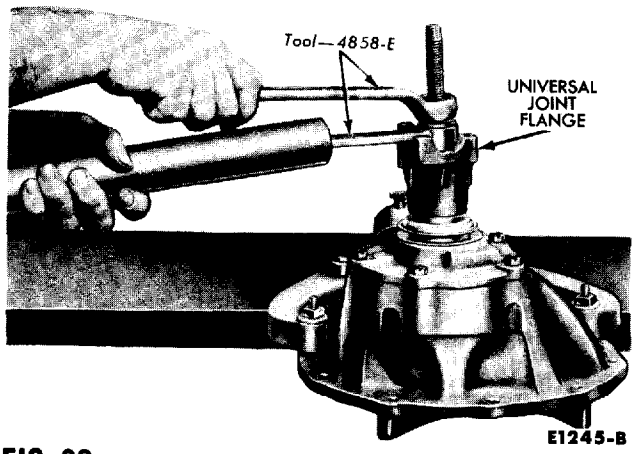

FIG. 30—U-Joint Flange Installation

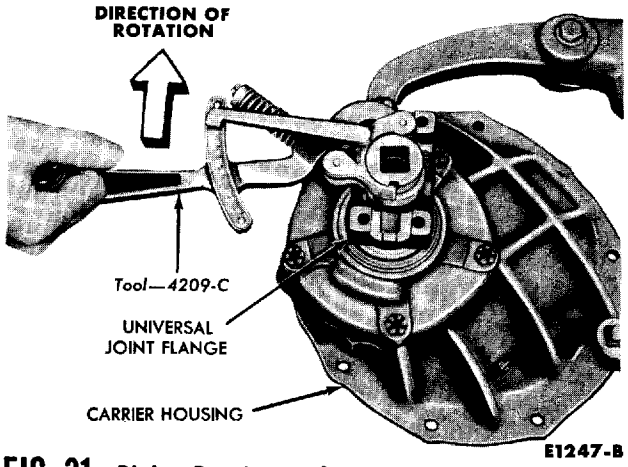

FIG. 31—Pinion Bearing Preload Check

3 DRIVE PINION AND DRIVE GEAR ADJUSTMENTS

DIFFERENTIAL INSTALLATION AND ADJUSTMENT

1. Wipe a thin coating of lubricant on the bearing bores so that the differential bearing cups will move easily.

2. Place the cups on the bearings and set the differential case assembly in the carrier. Slide the assembly along the bores until a slight amount of backlash is felt between the gear teeth.

3. Set the adjusting nuts in the bores so that they just contact the bearing cups. The nuts should be engaging about the same number of threads on each side.

4. Carefully position the bearing caps on the carrier. Match the marks made when the caps were removed.

5. Install the bearing cap bolts and alternately torque them to 70-80 ft-lbs.

6. If the adjusting nuts do not turn freely as the cap bolts are tightened, remove the bearing caps and again inspect for damaged threads or incorrectly positioned caps. Tightening the bolts to the specified torque is done to be sure that the cups and adjusting nuts are seated. Loosen the cap bolts, and torque them to only 20 ft-lbs before making adjustments.

7. **The left-hand adjusting nut is on the drive gear side of the carrier. The right-hand nut is on the pinion side.** Loosen the right-hand nut until it is away from the cup. Tighten the left-hand nut until the drive gear is just forced into the pinion with no backlash. (Recheck the right-hand nut at this time to be sure that it is still loose.) **Tightening the left-hand nut moves the drive gear into the pinion to decrease backlash, and tightening the right-hand nut moves the drive gear away.**

8. Tighten the right-hand nut two notches beyond the position where it first contacts the bearing cup. Rotate the drive gear several revolutions in each direction while the bearings are loaded to seat the bearings in their cups. **This step is important.**

9. Again loosen the right-hand nut to release the preload. If there is any backlash between the gears, tighten the left-hand nut just enough to remove this backlash. Carefully tighten the right-hand nut until it just contacts the cup. Set preload of 2½ to 3 notches tight by the right-hand nut. As preload is applied from the right-hand side, the drive gear is forced away from the pinion and usually results in the correct backlash.

10. Torque the differential cap bolts to specification.

11. Measure the backlash as shown in Fig. 3. Measure the backlash on several teeth around the drive gear. If the measurements vary more than 0.003 inch, there is excessive runout in the gears or their mountings, which must be corrected to obtain a satisfactory unit. If the backlash is out of specification, loosen one adjusting nut and tighten the opposite nut an equal amount, to move the drive gear away from or toward the pinion. **When moving the adjusting nuts, the final movement should always be made in a tightening direction. For example, if the left-hand nut had to be loosened one notch, loosen the nut two notches, then tighten it one. This procedure makes it certain that the nut is contacting the bearing cup, and that the cup cannot shift after being put in service.**

GEAR TOOTH CONTACT PATTERN CHECK

The surface of the gear teeth is coated with a manganese-phosphate coating to prevent scoring during the break-in process. Fig. 32 shows typical patterns made on a set of axle gears. Some minor differences will exist on individual gear sets, but, in general, desirable patterns should have these characteristics:

The drive pattern should be centered on the tooth.

The coast pattern should be centered on the tooth but may be slightly toward the toe.

There should be some clearance between the pattern and the top of the tooth.

There should be no hard lines where the pressure is high.

Paint the gear teeth and roll a contact pattern as shown in Fig. 4. Fig. 32 shows some drive- and coast

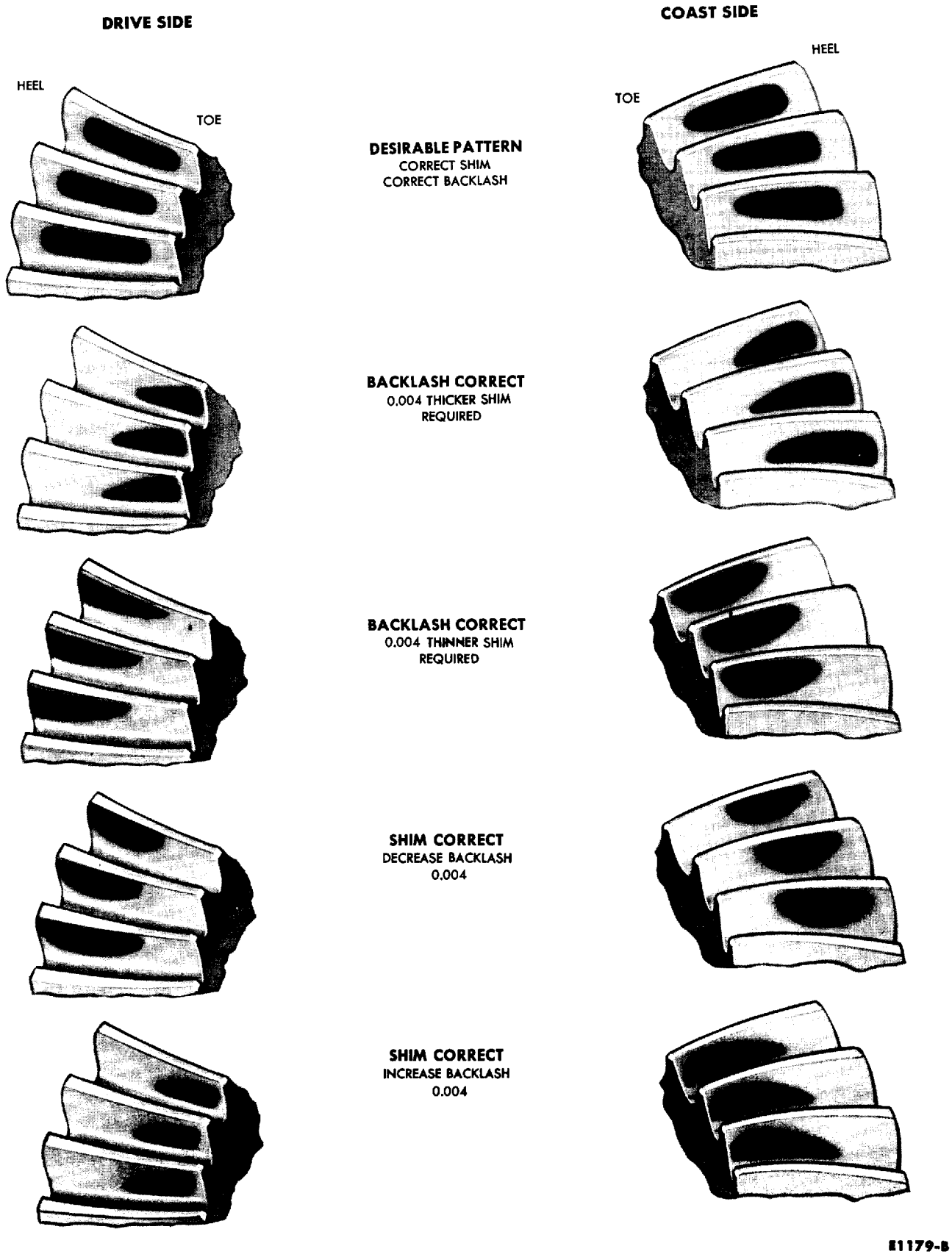

FIG. 32—Typical Gear Tooth Contact Pattern

patterns and indicates the changes required to obtain the correct operating positions of the gears.

Every gear has a characteristic pattern. Fig. 32 shows typical patterns only, and explains how patterns shift as gear location is changed. The movement of tooth contact patterns can be summarized as follows:

1. Decreasing backlash moves the drive gear closer to the pinion:

Drive pattern (convex side of gear) moves slightly lower and toward the toe.

Coast pattern (concave side of gear) moves lower and toward the toe.

2. Increasing backlash moves the drive gear away from the pinion:

Drive pattern moves slightly higher and toward the heel.

Coast pattern moves higher and toward the heel.

3. Thinner shim with the backlash constant moves the pinion closer to the drive gear:

Drive pattern moves deeper on the tooth (flank contact) and slightly toward the toe.

Coast pattern moves deeper on the tooth and toward the heel.

4. Thicker shim with the backlash constant moves the pinion further from the drive gear:

Drive pattern moves toward the top of the tooth (face contact) and toward the heel.

Coast pattern moves toward the top of the tooth and slightly toward the toe.

If the patterns are not correct, make the changes as indicated. The pinion need not be disassembled to change a shim. All that is required is to remove the retainer assembly and install a different shim. If the shim is changed, the differential assembly will have to be readjusted to maintain the correct backlash. **Do not install the carrier in the housing until a satisfactory pattern is obtained. Clean the marking compound from the gear teeth and lubricate.**

When the carrier is assembled and the gear tooth contact pattern is satisfactory, replace the adjusting nut locks. Torque the lock bolts to specification.

PART 6-3 SPECIFICATIONS

LUBRICANT REFILL CAPACITY

Capacity
4½ pints

ADJUSTMENTS

	Inches
Backlash Between Drive Gear and Pinion	0.004-0.009
Maximum Backlash Variation Between Teeth	0.003
Maximum Runout of Backface of Drive Gear as Assembled	0.003
Thickness	
Differential Side Gear Thrust Washers	0.030-0.032
Differential Pinion Gear Thrust Washers	0.030-0.032

TORQUE LIMITS—ft-lbs

Differential Bearing Cap Screws	70-80
Differential Bearing Adjusting Nut Lock Bolts	15-20
Carrier to Housing Stud Nuts	30-40
Pinion Retainer to Carrier Cap Screws	30-40
Drive Gear Attaching Cap Screws	65-75
Rear Axle Shaft Bearing Retainer Bolts	30-35
Case to Drive Gear Bolts	65-75

TORQUE LIMITS—ft-lbs (Continued)

Minimum Torque Required to Tighten Pinion Nut to Obtain Correct Pinion Bearing Preload		175*
Pinion Bearing Preload	New Bearings	17-27 inch-pounds
	Used Bearings	8-12 inch-pounds
Differential Bearing Preload		2½-3 notches tight

*If this torque can not be obtained with a used spacer, install a new spacer.

PINION AND DRIVE GEAR IDENTIFICATION

Ratio	Number of Teeth	
	Drive Gear	Pinion
3.00-1	30	10

DRIVE PINION ADJUSTING SHIM THICKNESS CHANGES (Inches)

New Pinion Marking	Old Pinion Marking								
	−4	−3	−2	−1	0	+1	+2	+3	+4
+4	+0.008	+0.007	+0.006	+0.005	+0.004	+0.003	+0.002	+0.001	0
+3	+0.007	+0.006	+0.005	+0.004	+0.003	+0.002	+0.001	0	−0.001
+2	+0.006	+0.005	+0.004	+0.003	+0.002	+0.001	0	−0.001	−0.002
+1	+0.005	+0.004	+0.003	+0.002	+0.001	0	−0.001	−0.002	−0.003
0	+0.004	+0.003	+0.002	+0.001	0	−0.001	−0.002	−0.003	−0.004
−1	+0.003	+0.002	+0.001	0	−0.001	−0.002	−0.003	−0.004	−0.005
−2	+0.002	+0.001	0	−0.001	−0.002	−0.003	−0.004	−0.005	−0.006
−3	+0.001	0	−0.001	−0.002	−0.003	−0.004	−0.005	−0.006	−0.007
−4	0	−0.001	−0.002	−0.003	−0.004	−0.005	−0.006	−0.007	−0.008

1962 FORD THUNDERBIRD SHOP MANUAL

GROUP 7

STEERING

		PAGE
PART 7-1	OPERATION, TROUBLE SHOOTING, AND ADJUSTMENTS	7- 2
PART 7-2	REPAIR	7- 9
PART 7-3	SPECIFICATIONS	7-20

PART 7-1 OPERATION, TROUBLE SHOOTING, AND ADJUSTMENTS

Section		Page
1	Description and Operation	7-2
2	Trouble Shooting	7-4
3	Adjustments	7-6

1 DESCRIPTION AND OPERATION

TORSION BAR STEERING GEAR

The power steering unit is a torsion-bar type of hydraulic assisted system. This system furnishes power to reduce the amount of turning effort required at the steering wheel. It also reduces road shock and vibrations.

The torsion bar power steering unit includes a rack and piston, and a worm and ball nut assembly which is meshed to the gear on the steering sector shaft. The unit also includes a hydraulic valve, valve sleeve, and torsion bar assembly which are mounted on the end of the worm shaft and operated by the twisting action of the torsion bar.

The torsion-bar type of power steering gear is designed with all components in one housing (Fig. 1). This makes possible internal fluid passages between the valve and cylinder, thus eliminating all external lines and hoses, except the pressure and return hoses between the pump and gear assembly.

The power cylinder is an integral part of the gear housing. The piston is double acting, in that fluid pressure may be applied to either side of the piston. The one-piece piston and power rack is meshed to the sector shaft.

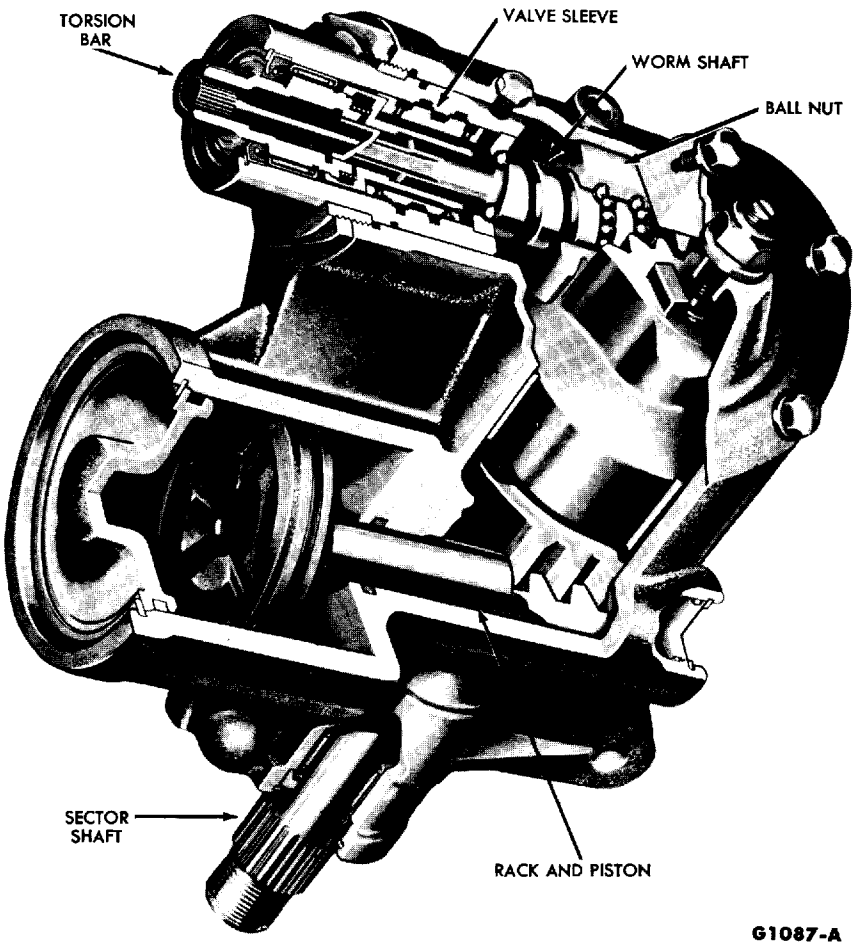

FIG. 1—Power Steering Gear

The operation of the hydraulic control valve is governed by the twisting of a torsion bar. All effort applied to the steering wheel is transmitted directly through the torsion bar to the ball nut and worm assembly. Any resistance to the turning of the front wheels results in twisting of the bar. The twisting of the bar increases as the front wheel turning effort increases. The control valve spool, actuated by the twisting of the torsion bar, directs fluid to the side of the piston where hydraulic assist is required.

The lower end of the torsion bar is splined to the lower end of the inside diameter of the worm shaft. The upper end of the worm shaft is coarsely splined to the ID of the torsion bar upper end. This spline fit is sufficiently loose so that the upper end of the torsion bar can twist in the actuator, and thus move it up and down. This movement results from a short length of helical splines on the ID of the actuator which engage the OD of the torsion bar sleeve. The actuator is held in the spool by a snap ring. Therefore, as the torsion bar twists, its radial motion is transferred into axial motion by helical threads. Thus, the valve spool is moved off center, and fluid is directed to one side of the piston or the other (Fig. 2).

The restricting of the fluid flow to one side of the piston increases the fluid pressure proportionately to the reaction of turning the front wheels.

The resistance of the torsion bar gives the driver a feel of the road at all times. The more the torsion bar twists, the greater the feel of the road and at the same time the driver

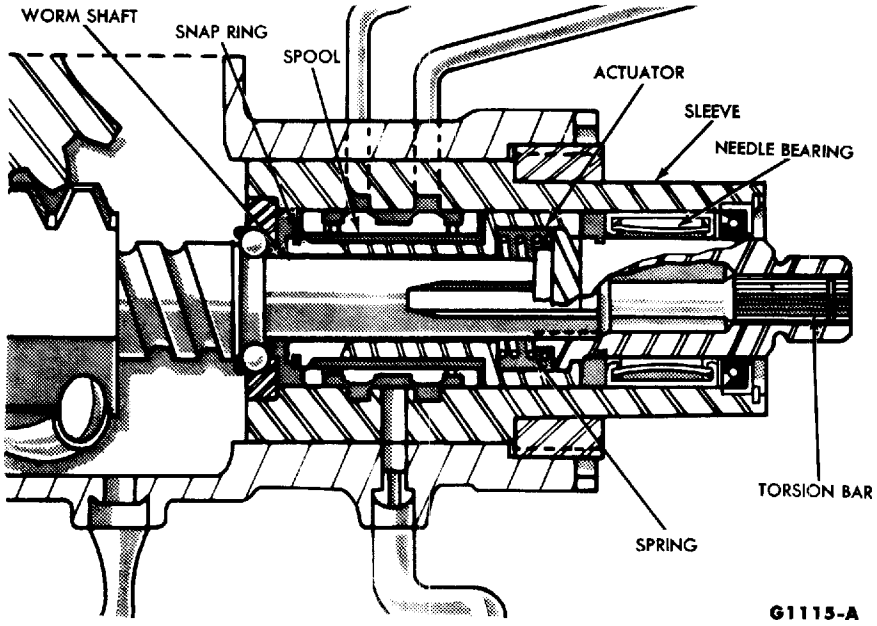

FIG. 2—Valve Detail

is receiving a greater power assist in steering.

STRAIGHT-AHEAD POSITION

When the power unit is not assisting in the steering effort, the valve spool is in neutral position (Fig. 3). The fluid flows from the pump, through the open-center valve, and returns to the pump through the worm bearing. Therefore, no area of the valve spool or steering gear is under high pressure in this position. The amount of pressure in neutral position is approximately 30 psi at normal operating temperatures.

The pump has no influence on the valve spool, but the spool, housing, and power cylinder are full of fluid at all times when the pump operates.

RIGHT TURN

When the steering wheel is turned to the right, the ball nut on the worm resists being turned due to load on the sector shaft from the front end weight of the vehicle. Thus the torsion bar will start to twist (Fig. 3).

For a right turn the valve spool moves **up,** allowing fluid from the pump to enter the upper side of the power piston. The fluid on the lower side of the piston is free to return through the valve to the pump. Therefore, the power assist is to the upper side of the piston, pushing it downward and providing assist in turning of the sector shaft.

LEFT TURN

If the steering wheel is turned to the left, it will cause a similar action but in the opposite direction (Fig. 3). The torsion bar twists to the left, moving the valve spool **downward,** allowing fluid from the pump to enter the lower side of the power piston. The fluid on the upper side of the piston is free to return through the valve to the pump. Therefore, the power assist is to the lower side of the piston, pushing it upward. The instant the driver stops applying steering effort to the steering wheel the valve spool is returned to its neutral position by the unwinding of the torsion bar. With the valve spool returning to neutral position, the torsion bar straightening also helps to return the wheels to the straight-ahead position.

PUMP

The roll-type hydraulic pump, belt-driven from the engine crankshaft, draws automatic transmission fluid from the reservoir and provides fluid pressure for the system. Steering gear lubrication is also provided by fluid from the reservoir. Within the pump itself is a flow-control and pressure-relief valve which governs the pressures within the steering system according to the varying conditions of

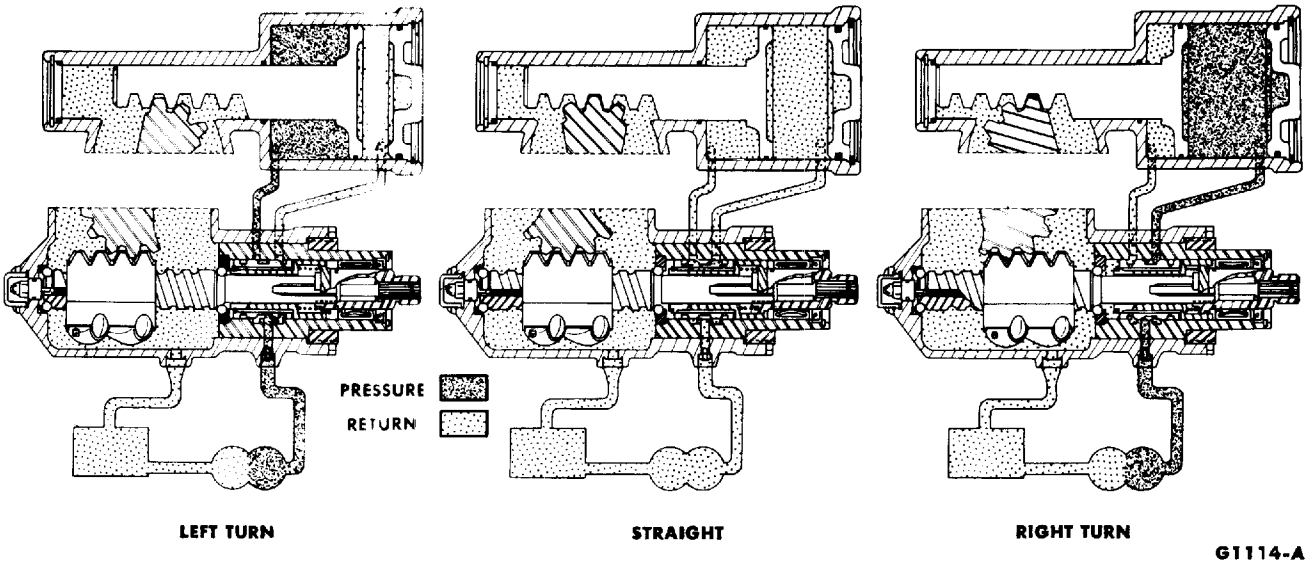

FIG. 3—Power Flows

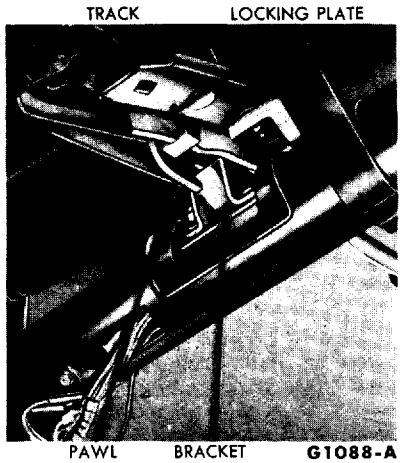

FIG. 4—Movable Steering Column Mechanism

operation. After fluid has passed from the gear, it returns to the reservoir.

MOVABLE STEERING COLUMN

The movable column combines a lateral-movement mechanism (Fig. 4) at the instrument panel with a flexible steering shaft that couples to the steering gear torsion bar. The steering column tube lower end pivots on a bracket that is fastened to the steering gear housing.

With the column in straight-ahead position and the gear shift lever at any position **other than P,** the column is locked to the brake pedal support assembly. It is locked by a pawl-type lever controlled by the selector tube. Two coil springs assist pressure from the selector tube and also provide positive engagement of the pawl in a locking plate when the shift lever is at any position other than P.

When the selector lever is moved to its extreme left position, a latch type bracket (fastened to the selector tube) disengages the pawl from the locking plate. The steering column assembly may then be moved about ten inches to the right. Whenever the pawl is disengaged, and the column is moved over, the transmission cannot be shifted. As the column is moved back to its extreme left (or straight-ahead) position the pawl engages, and the transmission can be shifted by the selector lever.

2 TROUBLE SHOOTING

Refer to the chart on page 7-6 for Movable Steering Column Trouble Symptoms and Possible Causes

PRELIMINARY CHECKS

The following preliminary checks should always be made before performing any trouble shooting operations. Also, see the chart on page 7-5.

CHECK PUMP BELT

If the pump belt is broken, glazed, or worn, replace it with a new belt. **Use only the specified type of belt.**

In the following procedure, a "used belt" is one that has run 15 minutes or longer.

1. Check the belt tension, using tool No. T62L-8620-A. See Part 7-3 for specified tension on new and on used belts.

2. If necessary, loosen the power steering pump bracket adjusting bolt and the pivot bolt.

3. Increase or decrease tension as required by adjusting the pump position.

4. Torque the adjusting bolt and the pivot bolt to specification, and check the belt tension.

CHECK FLUID LEVEL

Run the engine until the fluid is at normal operating temperature. Then turn the steering wheel all the way to the left and right several times, and shut off the engine.

Check the fluid level in the reservoir. If the level is low, add enough automatic transmission fluid to raise the level to a point one inch from the top, or to the F mark on the dip stick. **Do not overfill the reservoir.**

CHECK FOR FLUID LEAKS

With the engine idling, turn the steering wheel from stop to stop several times. Check all possible leakage points. Tighten all loose fittings, and replace any damaged lines or defective seats.

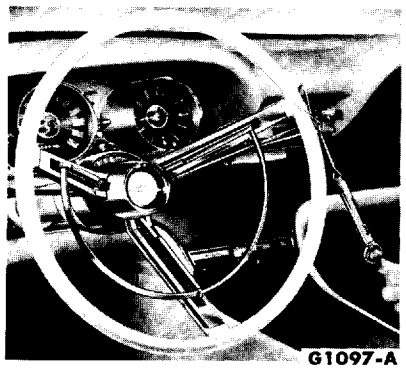

FIG. 5—Turning Effort Check

CHECK TURNING EFFORT

With the front wheels properly aligned and tire pressures correct, check the effort required to turn the steering wheel.

1. With the car on dry concrete, set the parking brakes.

2. With the engine warmed up and running at idle speed, turn the steering wheel to the left and right several times to warm the fluid.

3. Attach a spring scale at a 90° angle to a spoke of the steering wheel (Fig. 5). Measure the pull required to turn the wheel at least one complete revolution in both directions. The steering effort should not exceed 5-6 pounds rim pull.

FLUID PRESSURE TEST

A fluid pressure test will show whether the pump or some other unit in the power steering system is causing trouble in the system.

1. Disconnect the pressure line from the gear (Fig. 7), and install the pressure testing tool between the line and the gear. **Be sure that the pressure gauge is between the pump and the shut-off valve on the tool.**

2. Open the shut-off valve on the testing tool, and run the engine at idle speed. **If the pump normally operates quietly, ignore the louder pump noise when the pressure testing tool is connected to the system.** Allow at least 2 minutes for the fluid to warm up before starting the pressure tests.

3. Turn the front wheels all the way to the right and then to the left, noting the fluid pressure reading on the gauge when each wheel is against its stop. Normal fluid pressure at both positions is 700-850 psi **maximum. Do not hold a wheel against its stop because the fluid may overheat.**

4. If the fluid pressure, with a wheel against its stop, is less than 700 psi, turn the wheel off the stop. Slowly close the testing tool shut-off valve, and watch the gauge for an increase in pressure. **Do not leave the valve closed for more than 15 seconds.**

5. If the fluid pressure, with the shut-off valve fully closed, still shows less than 700 psi, the pump is causing the trouble. If the pressure increases to 700-850 psi, the trouble is in the power steering gear.

6. After the fluid pressure test is complete, shut off the engine and remove the pressure testing tool. Make the necessary repairs or replacements to eliminate the trouble in the system.

Steering Trouble Symptoms and Possible Causes

SYMPTOMS	POSSIBLE CAUSES	
HARD STEERING	Front tire pressure low. Incorrect front wheel alignment. Incorrect steering gear adjustment. Binding steering linkage.	Lack of lubrication. Insufficient pump pressure. Air in system. Faulty valve spool. Obstruction within steering gear.
LOOSE STEERING	Inadequately tightened wheel bearings. Damaged steering linkage.	Incorrect steering gear adjustment.
JERKY STEERING	Incorrect front wheel alignment. Faulty brakes. Wheel(s) out of balance. Fluid level low.	Worn steering linkage. Incorrect steering gear adjustment. Incorrect front wheel alignment.
PULL TO ONE SIDE	Incorrect tire pressure(s). Incorrect wheel alignment. Damaged suspension.	Incorrect front wheel bearing adjustment. Dragging brake(s).
SIDE-TO-SIDE WANDER	Incorrect tire pressure(s). Incorrect front wheel alignment. Loose or worn steering linkage.	Incorrect steering gear adjustment.
SHIMMY	Incorrect tire pressure. Incorrect front wheel balance. Incorrectly adjusted front wheel bearings.	Incorrect steering gear adjustment. Loose or worn steering linkage.
TIRE WEAR	Incorrect pressure(s). Incorrect front wheel balance. Dragging brake(s).	Bent or broken suspension parts. Incorrectly adjusted front wheel bearing(s).

Steering Trouble Symptoms and Possible Causes (Continued)

SYMPTOMS	POSSIBLE CAUSES	
BINDING OR POOR RECOVERY	Incorrect steering gear adjustment. Binding steering linkage. Incorrect front wheel alignment.	Insufficient pump pressure. Valve spool binding or out of adjustment.
LOSS OF POWER ASSIST	Insufficient pump pressure. Loose or broken pump belt. Valve spool out of adjustment.	Obstruction within steering gear. Fluid leak.
NOISE	Glazed or loose pump belt. Fluid leak.	Excessive wear of internal parts. Obstruction in lines.

Movable Steering Column Trouble Symptoms and Possible Causes

SYMPTOMS	POSSIBLE CAUSES	
BINDING, ROUGH, OR RASPING COLUMN MOVEMENT	Track to column bracket misalignment. Locking plate out of adjustment—rubs pawl.	Shroud interference with instrument panel.
HARD COLUMN MOVEMENT	Slide tension out of adjustment. Track to column bracket misalignment.	Locking plate out of adjustment—rubs pawl.
POSSIBLE SHIFT INTO REVERSE WITH COLUMN AT EXTREME RIGHT	Locking plate out of adjustment.	
POOR SHIFTING INTO OR OUT OF PARK	Left stop out of adjustment. Locking pawl arm binding in	pivot bushing.
LATERAL LOOSENESS IN COLUMN WHEN LOCKED	Locking pawl arm loose in pivot bushing.	Pivot bracket loose at steering gear.
VERTICAL LOOSENESS IN COLUMN WHEN LOCKED	Loose track or braces. Pivot bracket loose at steering	gear. Slide tension out of adjustment.
RIGHT SHROUD HITS AIR CONDITIONING UNIT	Right stop bolt on track out of adjustment.	

3 ADJUSTMENTS

VALVE SPOOL CENTERING

If necessary to check for specified operating pressure, see Section 2.

1. Run the engine until the power steering fluid is at normal operating temperature, rotating the steering wheel several times.

2. With the engine idling, and the front wheels straight ahead, read the force necessary to make a right turn and a left turn (Fig. 6). The difference should not be more than 3 in-lbs or ½ pound at the wheel rim.

3. If the difference is more than 3 in-lbs (or ½ pound at the wheel rim), remove the valve spool adjuster cap (Fig. 7).

4. Loosen the locknut and turn the adjuster (using the tools shown in Fig. 25, Part 7-2) **in the direction of the lesser reading** (Step 2). Tighten the locknut. To illustrate: If a left turn requires a 7 in-lb pull, and a right turn requires a 12 in-lb pull, turn the adjuster to the **left** until equal effort is necessary for a turn in either direction.

5. Re-tighten the locknut and recheck right and left turn steering efforts. Install the adjuster cap.

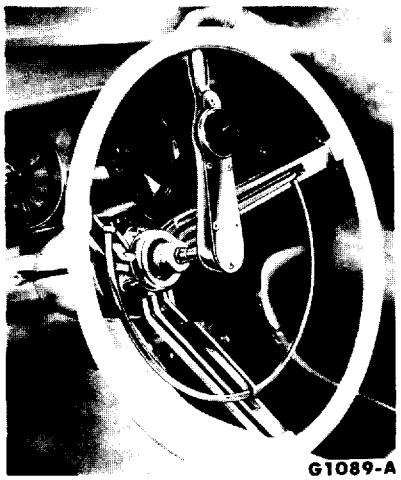

FIG. 6—Load Check

WORM BEARING PRELOAD AND SECTOR MESH

1. Disconnect the sector shaft (Pitman) arm from the steering arm to idler arm rod (Fig. 8).

2. Loosen the sector shaft adjusting screw locknut, and back off the adjusting screw (Fig. 7).

3. Use a torque wrench to measure preload by reading the force required to **very slowly** move the wheel one complete turn from center position (Fig. 6).

4. If preload is not within specification, loosen the bearing adjuster locknut and turn the bearing adjuster as required to correct preload.

5. Tighten the bearing adjuster locknut, and recheck the adjustment.

6. Center the steering wheel, and then turn the sector shaft adjusting screw until the specified force is required to turn the wheel through center position. **When making this adjustment, the adjusting screw should always be turned in one direction to reach adjustment. If the screw is turned too far, back it off one full turn, and then readjust.**

7. Tighten the locknut and then check the mesh adjustment. **Turn the wheel very slowly. No backlash is allowable at 30° on either side of center.**

9. Connect the sector shaft (Pitman) arm, and torque the nut to specification.

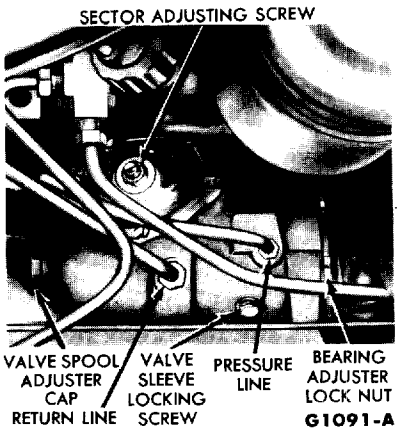

FIG. 7—Adjustments

STEERING WHEEL SPOKE POSITION

See Part 8-2 for this adjustment.

AIR BLEEDING

Air in the system (shown by bubbles in the fluid) should be bled. After making sure that the reservoir is filled to specification, (the fluid must be at normal operating temperature when the check is made), turn the steering wheel through its full travel three or four times. **Do not hold the wheels against their stops.** Recheck the fluid level.

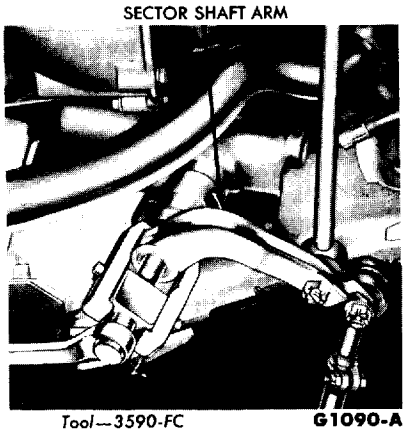

FIG. 8—Sector Shaft Arm Removal

MOVABLE COLUMN

TRACK TO COLUMN BRACKET

The track notched edge must be centered under the bracket notch (Fig. 9) for the full distance of track travel. The track may be centered when the track to pedal support bolts are loosened.

SLIDE TENSION

To adjust the friction between the track and the steering column bracket, loosen or tighten the nuts on the cam-type friction adjustment bolts (Fig. 9). **Be sure that both bolts are equally adjusted.**

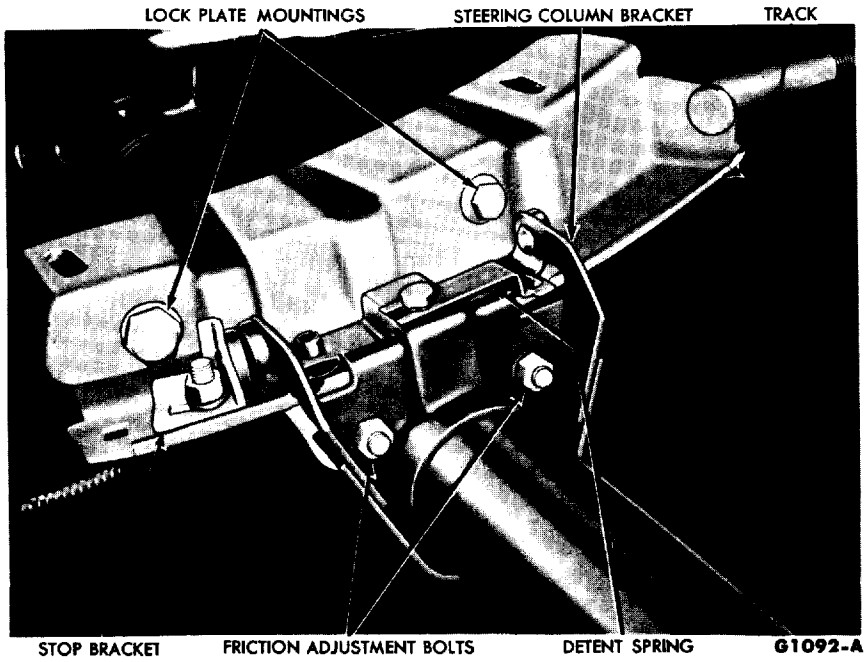

FIG. 9—Movable Steering Column Adjustments

LOCK PLATE

To adjust the engagement of the locking pawl in the lock plate, loosen the lock plate mountings (Fig. 9), and adjust the cam bolt and screw so that the lock pin clears the bottom of the lock plate by not more than 1/32 inch for the full travel. Then tighten the mountings. There must be full engagement of the pawl in the lock plate when the column is locked.

STOPS

With the selector lever out of P position and the nylon button of the detent spring in its track center notch, position the stop bracket against the bumper. The pawl pin must engage fully, and also clear the corner of the notch as it enters or leaves. There should be no lateral movement of the column as the pawl pin engages or disengages. **In a car with air conditioning, the spring projects to the left of its attaching bolt, and the left notch in the track is used. If the right shroud hits the air conditioning unit adjust the right stop bolt to prevent interference.**

PART 7-2 REPAIR

Section		Page
1	Pump and Fluid Reservoir.	7-9
2	Power Steering Gear.....	7-11
3	Steering Linkage.....	7-16
4	Steering Column	7-18

1 PUMP AND FLUID RESERVOIR REPAIR

On a car without air conditioning the reservoir is mounted on the pump. On a car with air conditioning, the reservoir is mounted on the left fender apron.

PUMP AND FLUID RESERVOIR REMOVAL

1. With a suction gun, remove as much fluid as possible from the reservoir.

2. Disconnect the 2 hoses at the pump, and fasten them in a raised position to prevent fluid from draining out.

3. Loosen and remove the pump belt.

4. Remove the pivot bolt and the adjusting bolt, and lift out the pump, reservoir, and bracket.

PUMP DISASSEMBLY

Handle all parts very carefully to avoid nicks, burrs, scratches, and dirt which could make the parts unfit for use.

1. Drain as much as possible of the remaining fluid from the pump and reservoir, and clamp the pump adjusting bracket in a vise.

2. On a car without air conditioning, remove the reservoir cover. Remove the reservoir retaining nut and reinforcement from inside the reservoir (Fig. 1) and lift the reservoir off the pump.

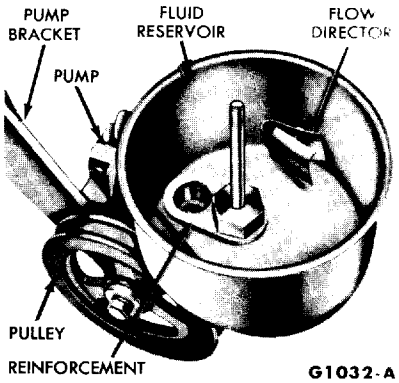

FIG. 1—Fluid Reservoir

3. Remove the 2 orifice O-rings from the top of the pump.

4. Remove the pulley and the pulley key from the carrier shaft.

5. Remove all the bolts from the pump, and separate the bracket, pump housing, and housing cover. If the parts do not pull apart easily, tap them gently with a soft hammer to loosen them. **Lift the cover vertically from the housing to prevent internal parts from falling out.**

6. Remove the O-rings from the flow director and the carrier insert (Fig. 2).

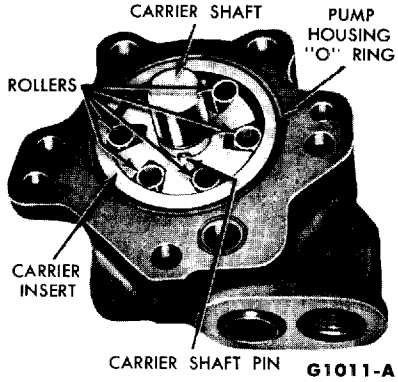

FIG 2.—Pump Housing, Carrier and Shaft

7. Using a feeler gauge and a straight-edge, check the end clearance of the carrier and the rollers in the pump housing (Fig. 3). If the clearance exceeds 0.0015 inch, replace the worn parts. **A damaged roller, carrier, or insert should not be replaced by itself; these parts are serviced in a kit, and all parts of the kit should be used.**

8. Remove the 6 rollers, and then pull out the carrier and shaft very carefully to avoid damage to these parts or the oil seal. **Remove the carrier insert only for replacement.**

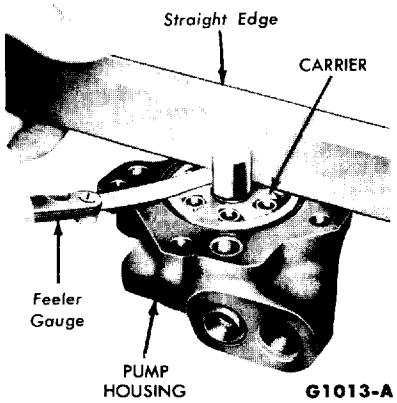

FIG. 3—End Clearance Check

9. Remove the carrier retaining ring from the shaft, slide the carrier off the shaft, and remove the carrier shaft pin (Fig. 2). **Avoid scratching the shaft while removing the ring.**

10. Remove the relief valve retainer (Fig. 4) from the housing cover, and remove the O-ring from the retainer.

11. Remove the valve spring from the bore in the housing cover, and slide the valve out of the bore. If the valve does not slide out easily, tap the cover with a soft hammer. **Do not scratch or nick the valve when removing it from the cover.**

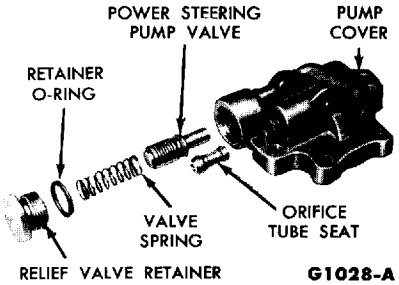

FIG. 4—Pump Cover

PUMP CLEANING AND INSPECTION

Wash all pump and reservoir parts in a cleaning solvent, and wipe them dry with a lint-free cloth.

Inspect the pump housing and cover for wear caused by turning of the rollers and the carrier. Check the carrier shaft bushings in the housing and the cover for wear or scores. If the bushings show wear or damage, replace the housing and/or the cover.

Inspect the carrier, shaft, and rollers for wear or any kind of damage. If there is wear or damage, replace the appropriate part(s). **A damaged roller, carrier, or insert should not be serviced alone; these parts are serviced in a kit, and all parts of the kit should be used.** If the retaining ring on the carrier shaft is bent or broken, replace it.

Be sure the valve assembly and its bore are dry. Insert the valve in the housing, and check for free movement of the valve in the bore. Using crocus cloth, remove any burrs from the valve.

Inspect the carrier shaft seal in the pump housing for wear or damage. If there is wear or damage, carefully remove the seal with a punch, avoiding damage to the shaft bushing. **Do not remove the seal except for replacement.**

Inspect the aluminum seat in the pressure hose port in the housing cover for damage, wear, or leakage.

ORIFICE TUBE SEAT REPLACEMENT

If damage, wear, or leakage makes replacement of this seat necessary, use the following procedure.

1. Tap the existing hole in the seat, using a starting tap of suitable size. **Be sure to remove all metal chips from the seat port after tapping.**

2. Place a nut and large flat washer on a bolt of the same size as the tapped hole. The washer must be large enough to cover the seat port.

3. Insert the bolt in the tapped hole and, using it as a puller, remove the seat.

4. Place a new seat in the port, and thread a bolt of suitable size into the port. Tighten the bolt enough to bottom the seat in the port.

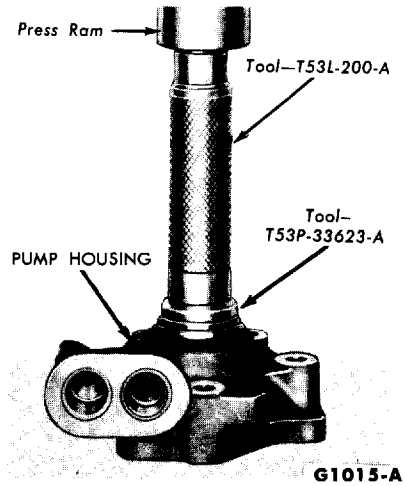

FIG. 5—Carrier Shaft Seal Installation

CARRIER SHAFT SEAL REPLACEMENT

If the carrier seal was removed from the pump housing, install a new seal. **Do not install the old seal.**

1. Coat the lip of a new seal with Lubriplate or an equivalent lubricant.

2. Position the seal in the bore of the housing. **The lip of the seal must face toward the pump housing carrier chamber.**

3. Press the seal into the housing (Fig. 5) until it seats firmly and evenly against the shoulder in the bore.

PUMP ASSEMBLY

Before assembling the pump and reservoir, coat all parts with automatic transmission fluid. **If the carrier insert is to be replaced, the new insert must be installed so that the slot in the edge of the insert engages the small pin in the pump housing.**

1. If the carrier and related parts seem to be in good condition, install the key, pulley, washer, and retaining bolt on the shaft. **Install the retaining bolt finger-tight.**

2. **To avoid damaging the oil seal in the housing cover,** carefully insert the shaft (with pulley attached) through the housing, position the carrier shaft pin, and slide the carrier onto the shaft. Install the retaining ring and the rollers.

3. Remove the retaining bolt, washer, pulley, and key from the carrier shaft. **To avoid damage to the seal, be sure the shaft does not move back and forth in the housing.**

4. Position the valve assembly spring in the bore, install a new O-ring on the pump valve retainer, and install the retainer in the pump housing cover. Torque the retainer to specifications.

5. Place a new O-ring in the groove around the insert in the pump housing, and install a new flow director O-ring in the face of the housing (Fig. 2).

6. Fasten the pump housing and cover together.

7. Clamp the adjusting bracket in a vise, and install the pump on the bracket. Torque all bolts to specifications.

8. Install the key, pulley, washer, and retaining bolt on the carrier shaft.

9. Torque the pulley-retaining bolt to specification. **The carrier shaft should turn freely when the bolt is properly tightened.**

10. Place new O-rings in the grooves on the top of the pump housing.

11. Hold the reservoir on the pump housing, and install the reinforcement in the reservoir. **The ears on the reinforcement should be facing upward over the outer hole in the reservoir.**

12. Position a new cover gasket around the inside of the cover. Install only the dip stick type cover, washer, and retaining bolt at this time. **The cover must be seated evenly and tightly on the reservoir.**

PUMP AND FLUID RESERVOIR INSTALLATION

1. Position the pump, reservoir and bracket in the engine compartment, and install the mounting bolts finger tight.

2. Position the pump belt, and check the alignment of the crankshaft and pump pulleys. If the pulleys are not aligned, the pump may be incorrectly installed, or spacers may be necessary.

3. Adjust the belt tension (Section 1).

4. Connect the 2 hoses at the pump and the fluid reservoir

5. Fill the reservoir with automatic transmission fluid to a point one inch from the top or to the F mark on the dipstick.

Install the non dipstick type cover at this time. **The cover must be seated evenly and tightly around the edge of the reservoir. Tighten the wing nut securely.**

6. Start the engine and run it at idle speed for about 2 minutes to warm the fluid in the power steering system.

7. After turning the steering wheel all the way to the left and right several times, check the system for leaks.

8. Increase the engine speed to about 1000 rpm, and turn the steering wheel all the way to the left and right several times.

9. Stop the engine, and check the pump, reservoir, and hose connections for fluid leaks. Correct the cause of any leaks.

10. Check the fluid level, and refill the reservoir if necessary.

2 POWER STEERING GEAR

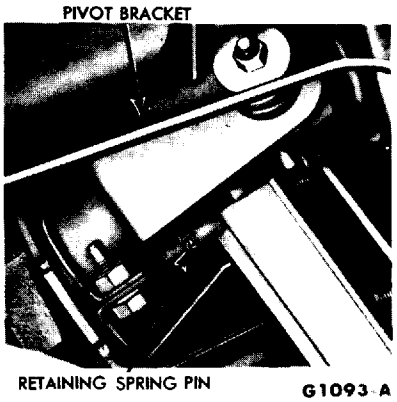

FIG. 6—Movable Column—Lower End

REMOVAL AND INSTALLATION

1. Disconnect the pressure line and the return line from the steering gear housing (Fig. 7, Part 7-1). Plug the openings and cap the lines.

2. Remove the pivot bracket clamp bolts (Fig. 6), remove the pivot bracket upper mounting nut and flat washer, and remove the pivot bracket.

3. Remove the cotter pin and the steering shaft retainer pin (Fig. 6).

4. After raising the car, disconnect the Pitman arm from the sector shaft, using the tool shown in Fig. 8, Part 7-1.

5. Remove the steering gear housing bolts, and remove the gear.

6. Position the gear in the car, and torque the housing bolts to specification.

7. After positioning the front wheels straight ahead, position the Pitman arm, lock washer, and nut. Torque the nut to specification.

8. After lowering the car, remove the plugs and caps, and connect the pressure and return lines to the steering gear housing.

9. Install the steering shaft retainer pin and its cotter pin.

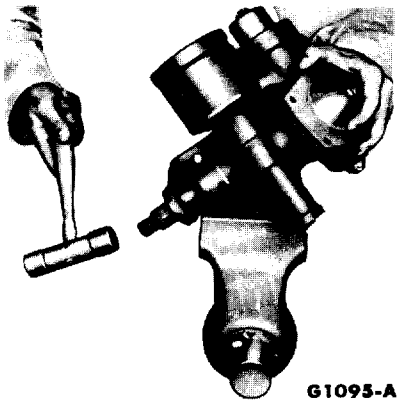

FIG. 9—Sector Shaft Removal

10. After positioning the pivot bracket, torque the clamp bolts to specification. Position the flat washer, and torque the bracket upper mounting nut to specification.

11. With the engine idling, check for leaks by twice cycling the steering wheel from stop to stop. **Do not hold**

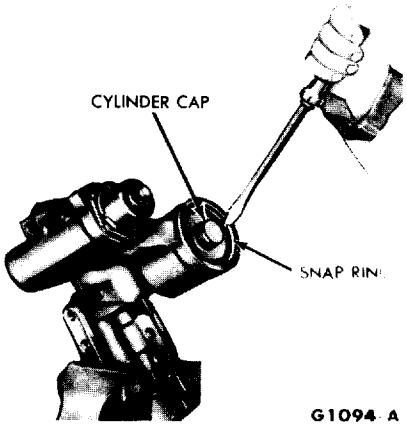

FIG. 7—Cylinder Cap Snap Ring Removal

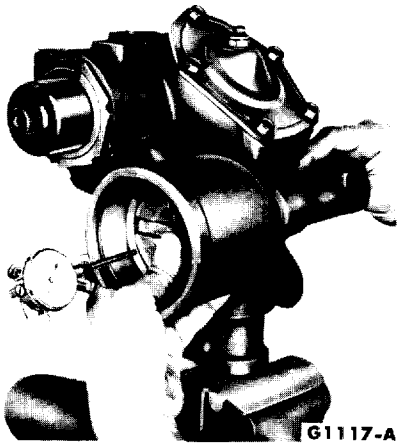

FIG. 8—Piston Backlash Check

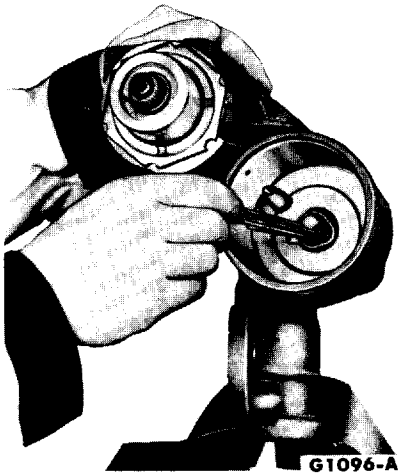

FIG. 10—Piston O-Ring Removal

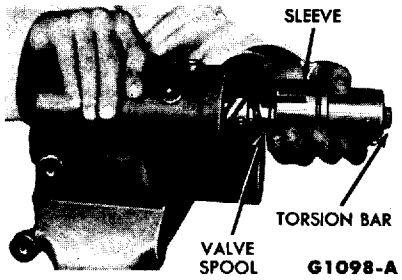

FIG. 11—Torsion Bar and Sleeve Removal

the wheel against its stops. Add the specified fluid to the reservoir as required.

12. If the gear has been overhauled, adjust the position of the valve spool (Part 7-1).

OVERHAUL

Use only parts specified for the 1962 Thunderbird steering gear.

1. Drain the hydraulic fluid from the ports, and thoroughly clean the exterior of the unit with a suitable solvent.

2. Mount the unit for disassembly on a stand adapter or in a vise.

3. After removing the cylinder plug snap ring, use compressed air to remove the cylinder plug.

4. After removing the snap ring, remove the cylinder cap from the piston bore (Fig. 7). Remove the cylinder cap O-ring.

5. Check the amount of backlash between the sector gear and the piston rack as follows:

a. Position a dial indicator against the piston. Locate the dial indicator shaft on the machined surface at the OD of the piston, and set it at zero (Fig. 8).

b. While holding the sector shaft firmly, push the piston by hand as far as it will go (Fig. 8). Maintain this

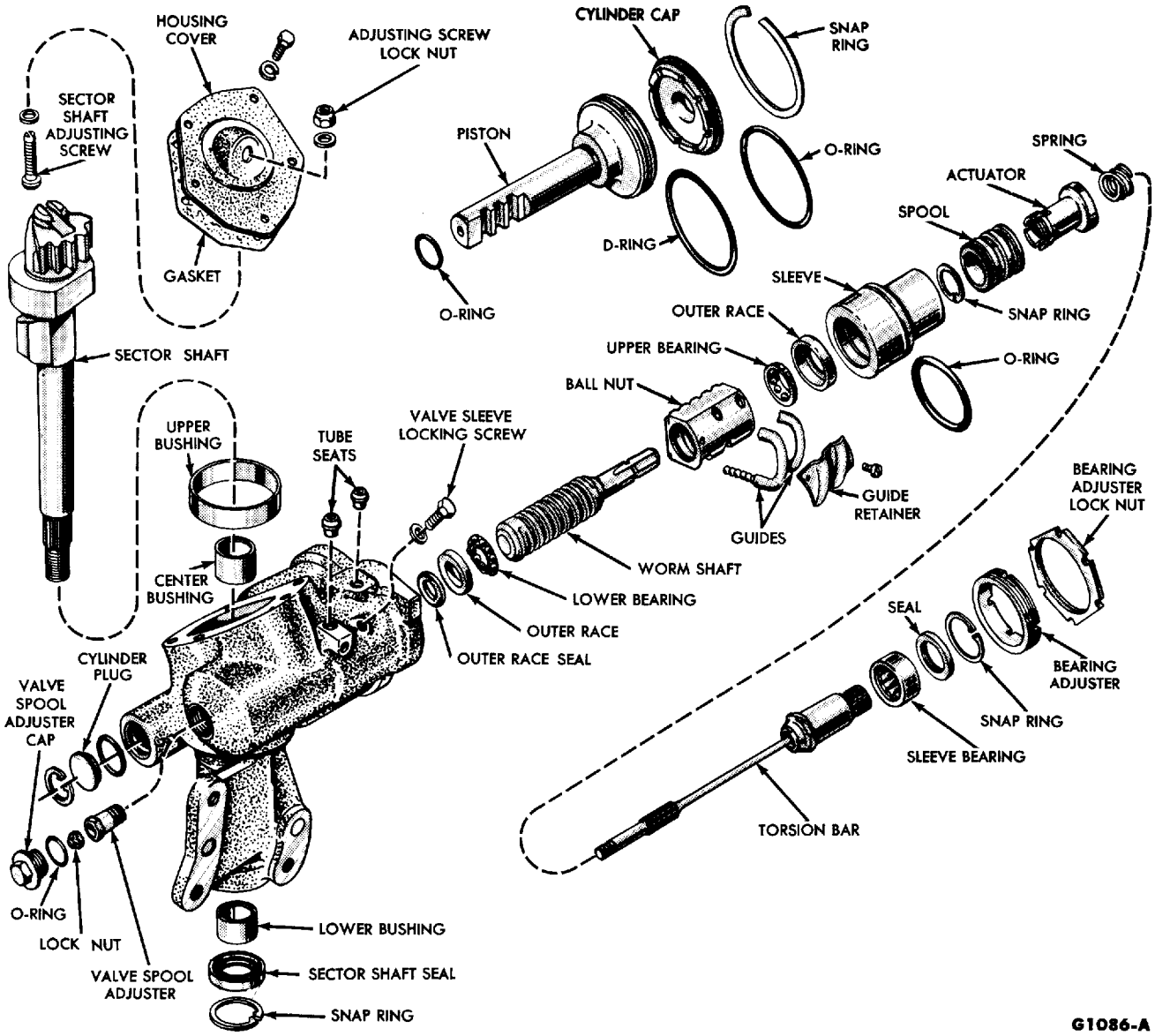

FIG. 12—Power Steering Gear Disassembled

pressure and note the indicator reading.

c. The backlash should not exceed .004 inch. If the backlash is excessive, install a new piston rack when assembling the gear.

6. Turn the worm shaft all the way to the stop and back it off about one and three-quarters turns, using the tool shown in Fig. 24

7. Loosen the sector shaft adjusting screw locknut and adjusting screw. Remove the 5 cap screws that retain the steering gear housing cover to the housing. Tap on the lower end of the sector shaft with a soft faced hammer until the sector shaft and cover can be removed (Fig. 9). Remove and discard the housing cover gasket. Slide the cover to one side to release the adjusting screw from the sector shaft, and remove the adjusting screw from the cover.

8. Push the piston out of the housing. Remove the piston O-ring. Remove the piston rack bore O-ring as shown in Fig. 10.

9. Loosen the valve sleeve locking screw.

10. Remove the valve adjuster cap and remove the O-ring from the cap.

11. Remove the bearing adjuster locknut and the bearing adjuster.

12. Remove the torsion bar and sleeve assembly (Fig. 11) by lightly tapping on the lower end of the torsion bar with a soft-faced hammer.

13. Remove the sector shaft seal retaining ring and the seal (Fig. 12).

DISASSEMBLY, INSPECTION AND ASSEMBLY OF TORSION BAR AND SLEEVE

1. Position the ball nut assembly in a vise. Use a clean cloth in the vise to protect the ball nut assembly. Remove the valve spool sleeve from the torsion bar assembly (Fig. 13). Remove the O-ring from the sleeve.

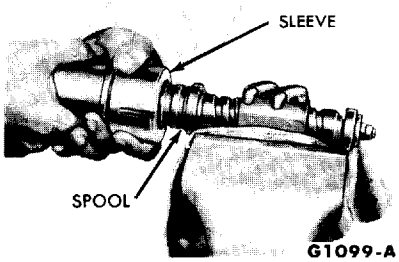

FIG. 13—Valve Spool Sleeve Removal

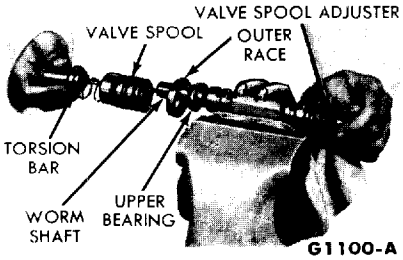

FIG. 14—Valve Spool Adjuster Removal

2. Remove the valve spool adjuster locknut from the lower end of the torsion bar. Remove the valve spool adjuster from the torsion bar.

3. Remove the torsion bar, valve spool, actuator, seal, bearing and race from the worm shaft (Fig. 14). Tap the end of the torsion bar with a soft-faced hammer, if necessary. **The valve spool and the actuator assembly are spring-loaded.** Discard the lower bearing race seal. Separate the valve spool and the actuator assembly from the torsion bar by turning the valve spool and actuator while turning the torsion bar.

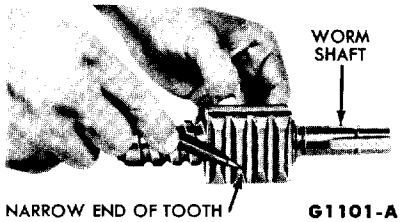

FIG. 15—Ball Nut Position

4. Remove the valve spool snap ring. Remove the valve spool from the actuator.

5. Check the ball nut assembly for evidence of binding or rough spots in the assembly itself. **Do not disassemble unless there is evidence of binding or rough spots. Be sure, however, that there is sufficient lubrication throughout the ball nut. The ball nut is not preloaded and should move freely throughout the entire travel. Do not rotate the ball nut against the end of the worm shaft as damage will result. To disassemble the ball nut proceed as follows.**

6. Remove the ball nut guide retainer and the ball guides. Turn the nut over and remove the balls by rotating the worm shaft from side to side. Catch the balls in a clean pan or a clean cloth. Remove the ball nut from the worm shaft. **Note the position of the ball nut on the worm shaft (Fig. 15).**

7. Wash all parts in a clean solvent and blow dry.

8. Inspect the worm and ball nut grooves and all of the balls for wear or scoring. If either the worm or ball

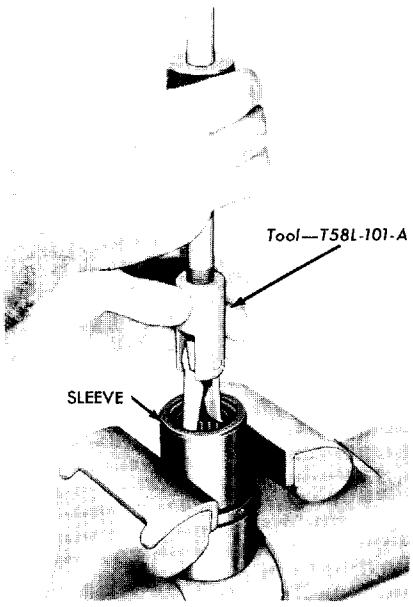

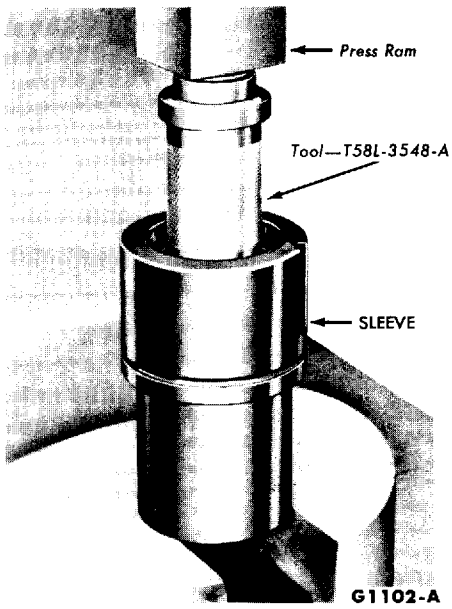

FIG. 16—Sleeve Seal and Bearing Removal

nut needs replacing, both must be replaced as a matched assembly. Inspect the ball nut teeth for pitting, wear, or scoring.

9. Inspect the ball return guides, making sure that the ends where the balls enter and leave the guides are not damaged.

10. Slide the ball nut over the worm. See Fig. 15 for correct position. Align the ball return guide holes with the worm groove. Count 31 balls (one half the total number of balls) into a suitable container. This is the number of balls required to fill one circuit. Drop these balls into both guide holes of one circuit, while alternately turning the worm in opposite directions. Fill the circuit from the bottom of one guide hole to the bottom of the other guide hole. The remaining balls should fill the return guide.

11. Coat the groove of one half of a return guide with clean oil-soluble grease and place the remaining balls in the guide. Place the other half of the guide over the balls. While holding the two halves together, push the guide into the guide holes in the gear rack. If the guide does not push all the way down easily, tap it lightly with a soft faced hammer to seat it. Fill the second ball circuit in the same manner and then attach the guide clamp with the lock washer and retaining screws.

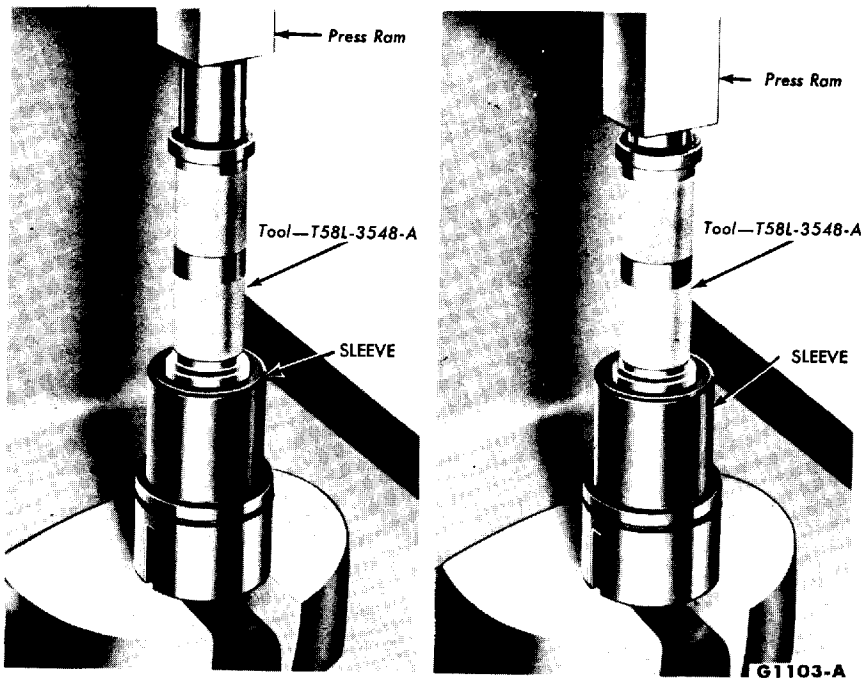

FIG. 17—Sleeve Bearing and Seal Installation

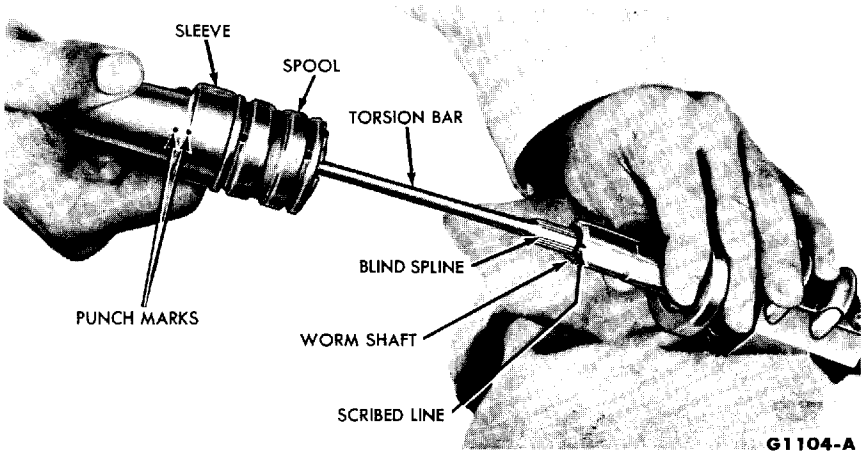

FIG. 18—Torsion Bar Installation

12. Inspect the torsion bar splines for nicks, pitting, wear or scoring. Make sure the blind spline on the torsion bar lines up with the punch dot on the upper end of the assembly (large splined end). If they do not line up, replace the torsion bar assembly.

13. Inspect the worm shaft bearings for pitting or other wear.

14. Check the fit of the actuator on the torsion bar assembly, with the spring in place. Hold the torsion bar while turning the actuator. When the actuator is released, the spring should cause the actuator to pop off the threads. If it does not pop off, replace the spring and check the gear teeth for burrs. If there are any burrs that cannot be removed, replace the defective parts.

15. Check the sleeve bearing for freedom of rotation. If the bearing is satisfactory, remove the snap ring and replace the oil seal. If the bearing must be replaced, remove the seal, and then remove the bearing, using the tools shown in Fig. 16.

16. Install the sleeve bearing in the sleeve, using the tool shown in Fig. 17. **The bearing must be pressed in so that there is 0.095-0.105 inch between the upper surface of the bearing and the seal seat surface of the sleeve.** To install the seal, use the tool shown in Fig. 17. Install the snap ring and check bearing rotation.

17. Lubricate the parts with automatic transmission fluid.

18. Check the fit of the upper bearing outer race to insure that it is a slip fit in the sleeve. Install the bearing race on the worm shaft.

19. Install the valve spool on the actuator and retain with a new snap ring. Check the valve spool for free rotation.

20. Install the torsion bar spring and the actuator on the torsion bar. Turn the lower end of the shaft so that the two identifying punch marks are aligned (Fig. 18). Hold the assembly together and insert the torsion bar into the worm shaft, aligning the blind spline on the torsion bar with the scribed line on the end of the worm shaft. **The torsion bar assembly is properly installed when the valve spool bottoms against the upper bearing and race.**

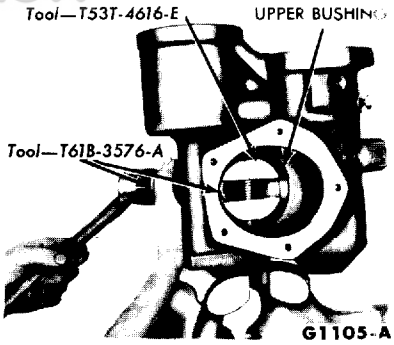

FIG. 19—Upper Bushing Removal

21. Install the valve spool adjuster on the torsion bar, but do not tighten. Install the lock nut. Lubricate the lip of the torsion bar seal with automatic transmission fluid.

22. Install the valve sleeve over the valve spool so that the upper bearing outer race is seated in the recess of the sleeve. Install a new O-ring seal on the sleeve.

DISASSEMBLY, CLEANING, INSPECTION, AND ASSEMBLY OF STEERING GEAR HOUSING

Clean the housing thoroughly, using clean solvent. Blow out all passages.

1. Inspect the housing for cracks and stripped threads, and mating surfaces for burrs.

2. Check the fluid passages for obstruction or leakage.

3. Inspect the housing bore. If scored or worn, replace the housing.

4. Check the sector shaft bushings in the housing for wear. If worn, replace them.

5. Remove the upper bushing (Fig. 19).

6. Remove the sector shaft lower and center bushings (Fig. 20).

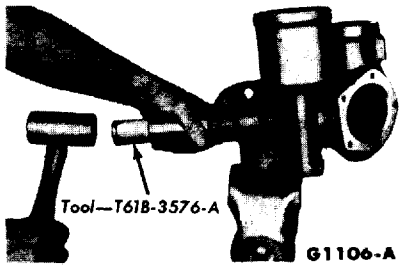

FIG. 20—Lower and Center Bushing Removal

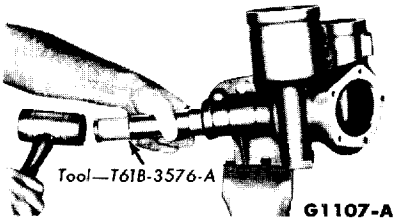

FIG. 21—Lower Bushing Installation

7. Install the lower and the center sector shaft bushings (Fig. 21).

8. Install the upper bushing, using the tool shown in Fig. 22.

9. Carefully position the lower worm bearing seal and the outer race in the housing.

INSPECTION OF SECTOR SHAFT AND PISTON

1. Inspect the sector shaft bearing surfaces and teeth. If worn, pitted or scored, replace the shaft.

2. Check the end play of the adjusting screw in the slot of the sector shaft as shown in Fig. 23. The end play should not exceed .002 inch. If the end play is excessive, select the proper shim to give the desired end play. Service shims are available in .063 inch, .065 inch, .067 inch, and .069 inch sizes.

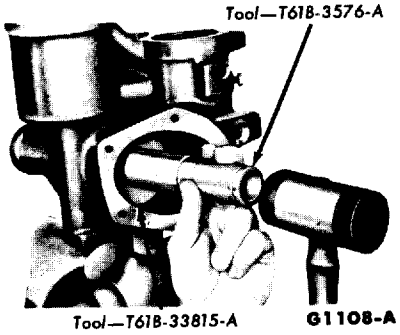

FIG. 22—Upper Bushing Installation

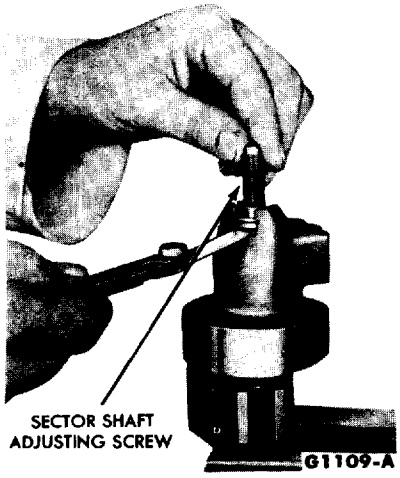

FIG. 23—Adjusting Screw Clearance Check

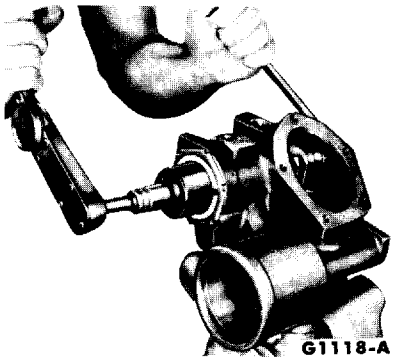

FIG. 24—Load Check

3. Inspect the piston rack teeth for pitting, wear, and scoring. Check the piston for cracks. Check the O-ring grooves in the piston rack bore and in the piston and cylinder cover for burrs and nicks. Check the cylinder cover for nicks.

ASSEMBLY OF STEERING GEAR

Refer to Fig. 12.

1. Align the slot in the sleeve with the lock screw in the housing, and install the torsion bar and sleeve assembly in the housing. **Be sure that the seal and the lower bearing outer race are properly seated.** Tap on the sleeve until it bottoms. Torque the lock screw to 15-20 ft-lbs. **The lock screw and the brass washer must be**

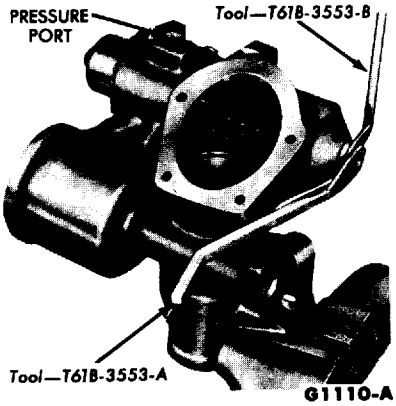

FIG. 25—Valve Spool Preliminary Centering

seated against the housing when they are properly installed.

2. Install the bearing adjuster and lock nut, and check worm bearing preload (Fig. 24). **Always make the final adjustment while tightening the adjuster.**

3. Install the valve spool centering wrench (Fig. 25) on the valve spool adjuster, and locate the valve spool so that the valley between the lands can be seen through the pressure port. Lock the adjuster with the lock nut, as shown in Fig. 25. **This is only a preliminary adjustment. Make final adjustment on the car** (Part 7-1, Section 3).

4. Center the ball nut with the centerline of the sector shaft opening.

5. Install a new O-ring in the piston rack bore of the housing, and lubricate the parts.

6. Carefully hone the edges of the piston rack teeth with a hand stone to prevent cutting the piston rack bore O-ring during installation.

7. Install a new O-ring on the piston and install the piston in the housing. **Lubricate the parts thoroughly, and rotate the piston while inserting it.** Align the center rack teeth with the sector bore in the housing.

8. Grease the sector shaft splines and install the shaft. Make sure that the sector shaft is centered by rotating the worm shaft. Count the turns from one stop to the other. There should be at least 3½ turns. If there are fewer than 3½ turns, remove the sector shaft and reinstall correctly.

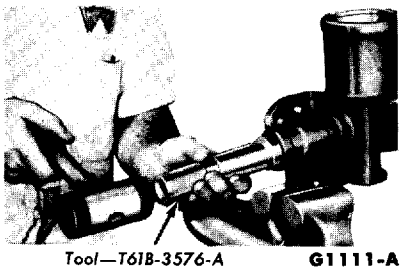

Tool—T61B-3576-A G1111-A

FIG. 26—Sector Shaft Seal Installation

9. Install the sector shaft seal (Fig. 26). Install the snap ring.

10. Install the sector shaft adjusting screw with the proper shim. Place the housing cover, with a new gasket in place, over the adjusting screw, and turn the screw until the cover is seated. Install the cover attaching screws, and torque them to specification.

11. Adjust the mesh load. This is accomplished by centering the gear and adjusting mesh load to obtain 6-14 in-lbs at center (high point).

12. Check piston rack backlash.

13. Install a new cylinder plug O-ring. Install the cylinder plug and the retaining snap ring.

3 STEERING LINKAGE

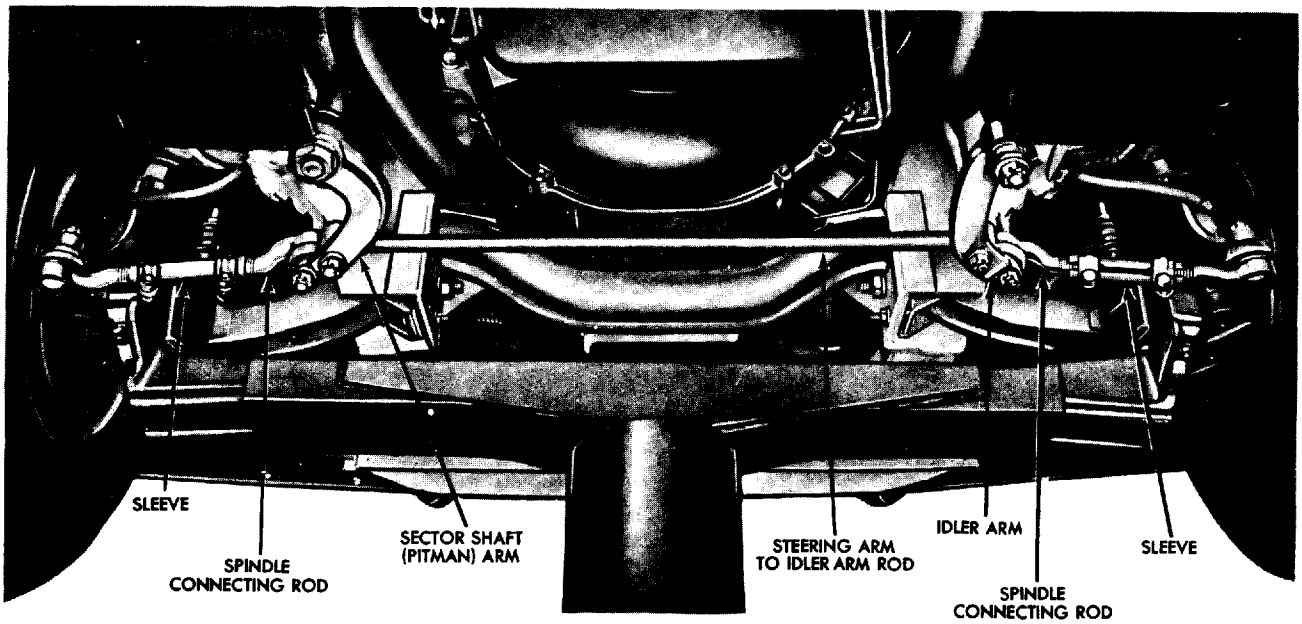

G1112-A

FIG. 27—Steering Linkage

SPINDLE CONNECTING ROD OR END REPLACEMENT

The spindle connecting rod ends, which are threaded into the outer ends of the rod sleeves, have non-adjustable, spring-loaded ball studs. A rod end should be replaced when excessive looseness at the ball stud is noticed.

1. Remove the cotter pin and nut from the worn rod end or rod ball stud (Fig. 27).

2. Disconnect the rod or end, using tool OTC 462.

3. Loosen the connecting rod sleeve clamp bolts, and remove the rod or end from the sleeve. Discard all rod end parts that were removed from the sleeve. **All new parts should be used when a spindle connecting rod end is replaced.**

4. Thread a new rod end or rod into the sleeve, but do not tighten the sleeve clamp bolts at this time.

5. Install the seal on the rod end ball stud, and install the stud by tightening the stud nut. Torque the nut to specification and install the cotter pin.

6. Check and, if necessary, adjust toe-in (Part 8-2) and steering wheel spoke position. **After toe-in is checked and adjusted, torque the old sleeve clamp bolts to specification. Add 4 pounds torque if new bolts are used.**

SPINDLE SLEEVE REPLACEMENT

A spindle sleeve should be replaced if it becomes worn or damaged (Fig. 27). **Do not attempt to straighten the sleeve if bent or chase the threaded portion if damaged.**

1. Remove the spindle connecting rod ends as described in the previous sub-section.

2. Screw the spindle rod ends into the new sleeve the same number of turns as the worn ends that were removed. Do not tighten the clamp bolts at this time.

3. After installing the seal on the rod ends, position the sleeve assembly on the sector shaft arm (or the idler arm) and the spindle arm. Install the retaining nut, torque to specification, and install the cotter pin.

4. Check and, if necessary, adjust toe-in (Part 8-2) and steering wheel spoke position. After toe-in is checked and adjusted, torque the sleeve clamp bolts to specification.

STEERING ARM TO IDLER ARM ROD REPLACEMENT

The rod connecting the sector shaft arm and the idler arm has non-adjustable ball studs. The rod should be replaced when damaged or when worn at the ball studs.

1. Remove the cotter pins and nuts from the ball studs at the sector shaft arm and the idler arm, and remove the steering arm to idler arm rod assembly (Fig. 27).

2. After installing new seals on the ball studs, position the new steering arm to idler arm rod on the idler arm and the steering arm.

3. Install the ball stud retaining nuts and torque to specification. Install the cotter pins.

4. Check and, if necessary, adjust toe-in (Part 8-2).

STEERING IDLER ARM AND BUSHING REPLACEMENT

Replace the steering idler arm and bushing if the bushing is worn or the arm is damaged.

1. Disconnect the spindle rod and the steering arm to idler arm rod from the idler arm (Fig. 27).

2. After removing the idler arm retaining nut and special washer, remove the idler arm and bushing.

3. Position the new idler arm and bushing assembly.

4. With the idler arm pointed straight forward, position the special washer and torque the retaining nut to specification.

5. Connect the idler arm and the steering arm to idler arm rod.

6. Check and, if necessary, adjust toe-in (Part 8-2).

IDLER ARM BUSHING REPLACEMENT

The idler arm bushing can be replaced when the arm is still connected to the spindle connecting rod and the steering arm to idler arm rod. To replace this bushing, use the tool shown in Fig. 28. Then torque the retaining nut to specification.

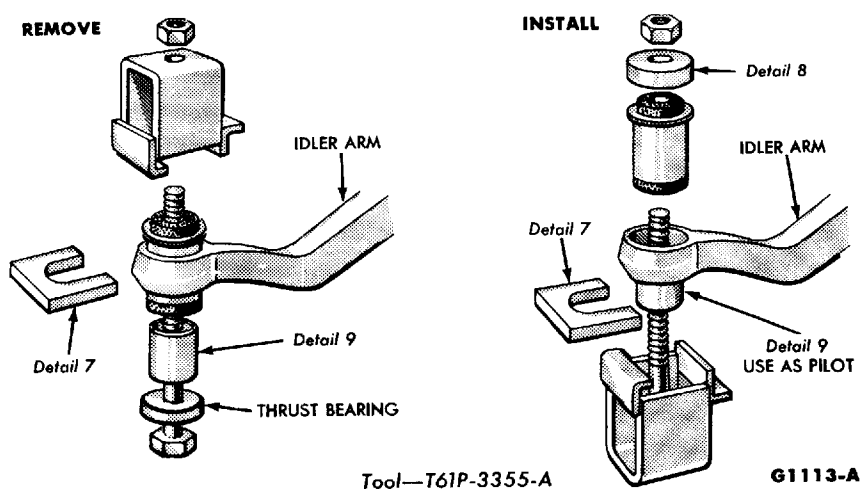

FIG. 28—Idler Arm Bushing Replacement

4 STEERING COLUMN ASSEMBLY

STEERING WHEEL REPLACEMENT

1. Unsnap the hub cap from the horn ring.

2. Remove the steering wheel nut, and then pull the steering wheel and horn ring (Fig. 29).

3. Transfer the necessary parts to the new steering wheel.

4. Install the steering wheel and horn ring, and torque the nut to specification. Stake the nut securely.

5. Install the hub cap.

STEERING SHAFT UPPER BEARING REPLACEMENT

1. Remove the steering wheel and horn ring as an assembly.

2. Remove the plastic shift indicator dial, and then remove the turn indicator switch actuating arm.

3. Remove the bearing retainer plate, the bearing snap ring, and the turn indicator lever.

4. Disconnect the steering upper shaft from the steering gear worm shaft, and pull up on the upper shaft until the steering column upper bearing is free of its housing.

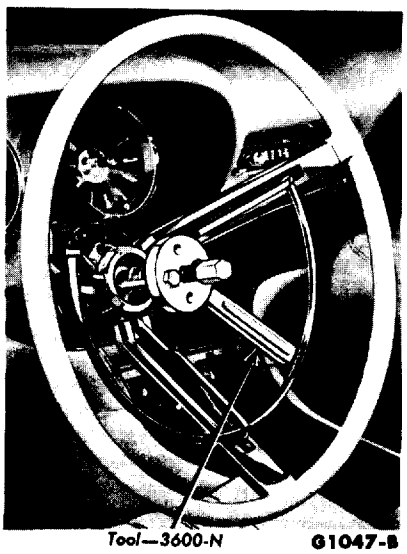

FIG. 29—Steering Wheel Removal

5. After removing the rubber insulator from the bearing, remove the bearing from the upper shaft, using a suitable puller.

6. Install the bearing on the shaft.

7. After positioning the rubber insulator, push the shaft and bearing down until the bearing and insulator are positioned in the housing. Be sure that the steering shaft and worm shaft splines mate correctly.

8. Install the snap ring, the retainer plate, and the turn indicator lever.

9. Install the switch actuating arm and the shift indicator dial. Be sure that the dial is correctly aligned.

10. Install the steering wheel and horn ring assembly.

11. Connect the upper shaft and the steering gear worm shaft.

STEERING SHAFT REPLACEMENT

REMOVAL

1. Remove one bolt from the pivot bracket clamp (Fig. 6), and disconnect the manual shift lever at the connecting rod.

2. Remove the cotter pin and the steering shaft retaining spring pin (Fig. 6), and remove the pivot bracket stud nut.

3. Remove both steering column opening shrouds at the instrument panel.

4. Remove the left and right extension panels from the instrument panel (Fig. 30) on a car without air conditioning. If the car has air conditioning, remove only the left panel.

5. Disconnect the lower left extension panel (Fig. 30).

6. Remove the steering column opening cover plate screws, and pull the plate loose.

7. Remove the steering wheel, and disconnect the wiring harness connectors.

8. Disconnect the track right support. On a car with air conditioning, remove the radio for access to the support nut.

9. Remove both track to pedal support bolts, and then remove the steering column assembly.

10. Remove the dial indicator retaining screws, and move the indicator out of the way.

11. After removing the steering column upper bearing retaining ring (three screws), remove the bearing retaining snap ring.

12. Tap the shaft and lower bearing out through the lower end of the shift tube.

13. Transfer the upper bearing lower snap ring to the new steering shaft.

INSTALLATION

1. Install the steering shaft upper bearing retaining ring.

2. Position the new steering shaft (with lower bearing) inside the shift tube and through the upper bearing.

3. Install the bearing retaining snap ring fully in its groove, and install the dial indicator.

4. Position the steering column assembly in the car, and loosely install the track attaching bolts at the pedal support. **Be sure the spring pin holes are aligned.**

5. Connect the track right support, and connect the wiring harness connectors. On a car with air conditioning, install the radio.

6. With steering shaft and steering wheel index marks aligned, install the steering wheel.

7. Install the steering column opening cover plate and the lower left extension panel.

8. Install the extension panel(s) on the instrument panel. Install the steering column opening shrouds.

9. Install the pivot bracket stud nut, the spring pin, and its cotter pin

10. Connect the pivot bracket clamp, and connect the manual shift lever.

11. Tighten the track attaching bolts at the pedal support, and check operation of the manual shift linkage, the neutral switch, and other electrical circuits affected. Check operation of the movable column.

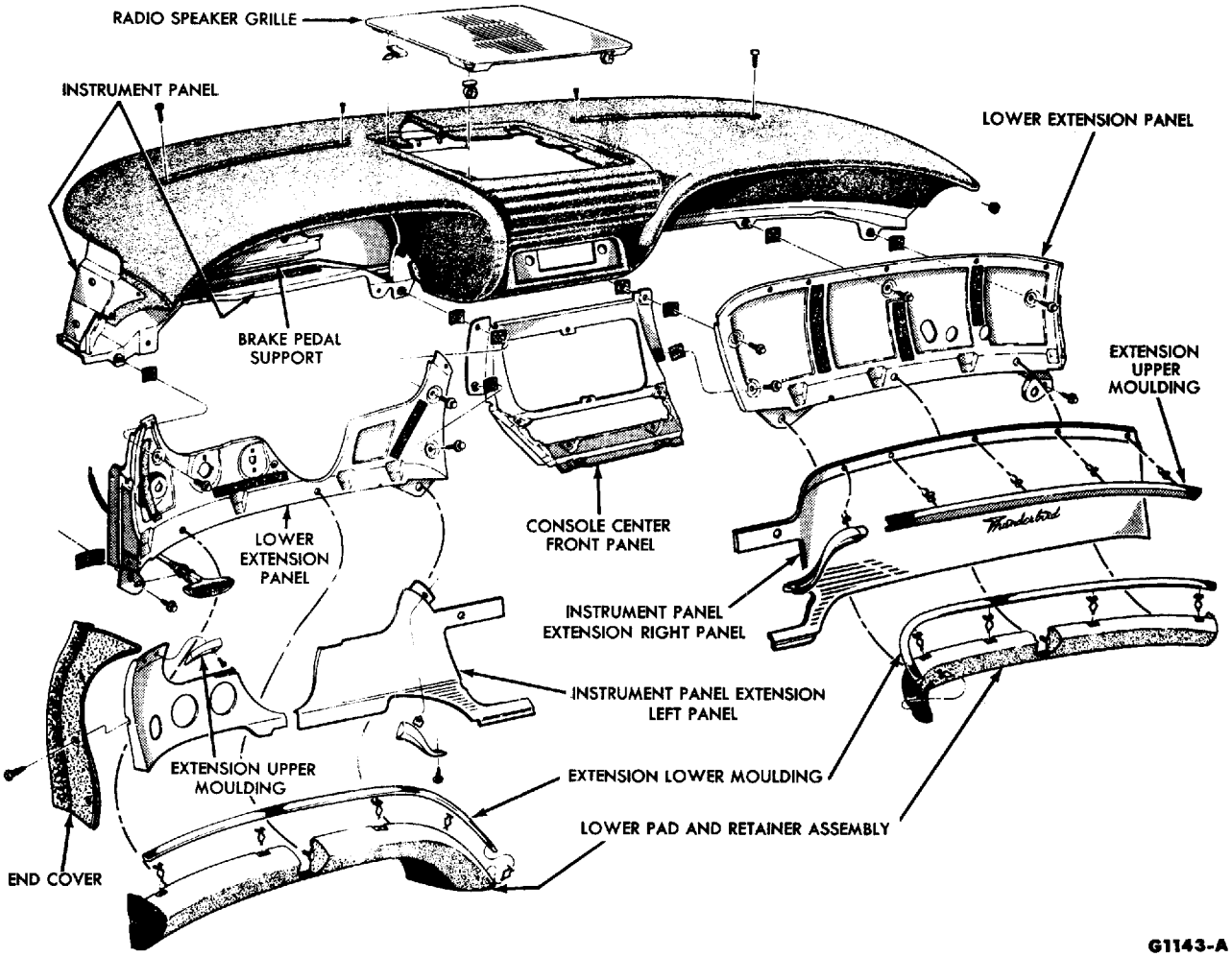

FIG. 30—Instrument Panel Area

PART 7-3 SPECIFICATIONS

TORQUE LIMITS

STEERING LINKAGE	Ft.-lbs.
Sector Shaft (Pitman) Arm Nut	110-150
Steering Arm to Idler Arm Rod Stud Nuts	40-55
Spindle Connecting Rod End Stud Nuts	40-55
Connecting Rod Sleeve Clamp Bolts	16-27
Idler Arm Bracket to Underbody Bolts	20-30
Idler Arm and Bushing to Bracket Nut	60-80
PUMP, STEERING GEAR, AND STEERING SHAFT	
Steering Gear to Underbody Bolts	35-50
Sector Shaft Cover Bolts	23-27
Steering Wheel Nut	25-35
Flange to Insulator Bolts (Fixed Column)	10-15
Pump Drive Pulley to Crankshaft Pulley Bolts	20-25
Pump Bracket to Water Pump Housing Bolt	20-25
Pump Bracket Pivot Bolt	20-25
Pump Housing Bolts	20-25
STEERING COLUMN ASSEMBLY	
Steering Column Opening Cover Plate Screws	9-12
Track to Pedal Support Bolts	19-23

TORQUE LIMITS (Continued)

Pivot Bracket Clamp Bolts	22-28
Pivot Bracket Stud Nut	10-14
Pawl Pivot Nut	5-22
Lock Plate Eccentric Bolt (Nut)	18-22
Lock Plate Bolt	10-14
Stop Bracket Nut	9-12
Detent Spring Bolt	5-7
Shift Lever to Shift Connecting Rod Ball Stud Nut	9-12
Friction Adjustment Bolt (Nuts)	9-12

ADJUSTMENTS AND TOLERANCES

Piston Rack to Sector Shaft Backlash (Part 7-2)	0.004 inch
Worm Bearing Preload	2-4 in-lbs
Mesh Load	6 in-lbs max.
Steering Effort (Spring Scale)	5-6 lbs
Pump Belt Tension (See Part 7-1) New Belt Used Belt	 120-150 lbs. 90-120 lbs.
Fluid Pressure	950-1100 psi

1962 FORD THUNDERBIRD SHOP MANUAL

GROUP 8

BRAKES AND SUSPENSION

		PAGE
PART 8-1	WHEELS AND TIRES	8-2
PART 8-2	FRONT WHEEL ALIGNMENT	8-5
PART 8-3	FRONT AND REAR SUSPENSION	8-8
PART 8-4	HYDRAULIC AND PARKING BRAKES	8-15
PART 8-5	POWER BRAKES	8-25
PART 8-6	SPECIFICATIONS	8-31

PART 8-1 WHEELS AND TIRES

Section		Page
1	Wheel Maintenance and Replacement	8-2
2	Hubs, Bearings, and Grease Retainers	8-3

1 WHEEL AND TIRE MAINTENANCE AND REPLACEMENT

WHEEL INSPECTION AND MAINTENANCE

Wheel hub nuts should be inspected and tightened to specification after the first 1000 miles. Loose wheel hub nuts may cause shimmy and vibration. Elongated stud holes in the wheels may also result from loose hub nuts.

Keep the wheels and hubs clean. Stones wedged between the wheel and drum and lumps of mud or grease can unbalance a wheel and tire.

Check for damage that would affect the runout of the wheels. Wobble or shimmy caused by a damaged wheel will eventually damage the wheel bearings. Inspect the wheel rims for dents that could permit air to leak from the tires.

WHEEL AND TIRE REMOVAL, INSTALLATION, OR REPLACEMENT

WHEEL AND TIRE ASSEMBLY REMOVAL

1. Pry off the wheel hub cap or cover. Loosen but do not remove the wheel hub nuts.

2. Raise the car until the wheel and tire clear the floor.

3. Remove the wheel hub nuts from the bolts, and pull the wheel and tire assembly from the hub and drum.

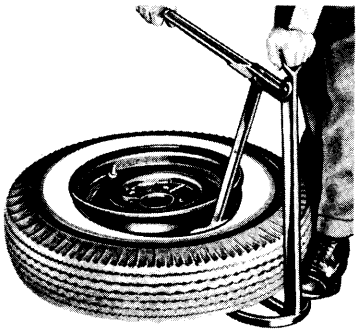

F1058-A

FIG. 1—Bead Loosening Tool

DEMOUNTING TIRE FROM WHEEL

The tire can be demounted on a mounting machine. **Be sure that the outer side of the wheel is positioned downward.** If tire irons are used follow the procedure given here.

1. Remove the valve cap and core, and deflate the tire completely.

2. With a bead loosening tool, break loose the tire side walls from the wheel (Fig. 1).

3. Position the outer side of the wheel downward, and insert two tire irons about 8 inches apart between the tire inner bead and the back side of the wheel rim. **Use only tire irons with rounded edges or irons designed for demounting tubeless tires.**

4. Leave one tire iron in position, and pry the rest of the bead over the rim with the other iron. Take small "bites" with the iron around the tire in order to avoid damaging the sealing surface of the tire bead.

5. Stand the wheel and tire upright with the tire outer bead in the drop center well at the bottom of the wheel. Insert the tire iron between the bead and the edge of the wheel rim, and pry the wheel out of the tire.

MOUNTING TIRE TO WHEEL

1. If a used tire is being installed remove all dirt from the tire.

If a tire is being mounted to the original wheel, clean the rim with emery cloth or fine steel wool. Check the rim for dents.

If a new wheel is being installed, coat a new valve with RUGLYDE or similar rubber lubricant and position the valve to the new wheel. Use a rubber hammer or a valve replacing tool to seat the valve firmly against the inside of the rim.

2. Apply RUGLYDE or a similar rubber lubricant to the sealing surface on both tire beads. With the outer side of the wheel down, pry the beads over the wheel rim with two tire irons. **Do not use a hammer or mallet to force the beads over the rim.**

3. Align the balance mark on the tire with the valve on the wheel.

4. Hold the beads against the rim flanges by positioning a tire mounting band over the tire (Fig. 2). If a mounting band is not available, tie a tourniquet of heavy cord around the circumference of the tire. Tighten the cord with a tire iron. Center the tire on the wheel with a rubber mallet.

5. Give the tire a few quick bursts of air to seat the beads properly, then inflate the tire to 40 pounds pressure. Check to see that the bead positioning rings (outer rings near the side walls) are evenly visible just above the rim flanges all the way around the tire. If the rings are not even, deflate the tire completely and inflate it again.

6. When the rings are properly positioned, deflate the tire to the recommended pressure.

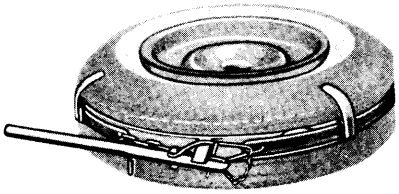

F1021-A

FIG. 2—Tubeless Tire Mounting Band

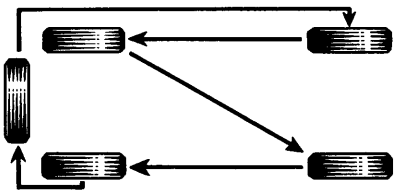

F1019-A

FIG. 3—Tire Cross-Switching Diagram

WHEEL AND TIRE ASSEMBLY INSTALLATION

1. Clean all dirt from the hub and drum.

2. Position the wheel and tire assembly on the hub and drum. Install the wheel hub nuts and tighten them alternately in order to draw the wheel evenly against the hub and drum.

3. Lower the car to the floor, and torque the hub nuts to specification.

TIRE ROTATION

For longer tire life, all five tires should be cross-switched as shown in Fig. 3. See Part 12-1 for the specified interval.

2 HUBS, BEARINGS, AND OIL SEALS OR GREASE RETAINERS

The front hubs are attached to the front brake drums. The front wheel bearing cones and rollers rotate in bearing cups which are pressed into each hub. Grease retainers are installed at the inner ends of the hubs to prevent lubricant from leaking into the brake drums.

The rear hubs and bearings are installed on the rear axle shafts, and the oil seals are installed in the axle housing between the axle housing and the axle shafts. **All service procedures for rear hubs, bearings and oil seals are given in Part 6-1.**

FRONT WHEEL BEARING ADJUSTMENT

The front wheel bearings should be adjusted if the wheel is loose on the spindle or if the wheel does not rotate freely. The following procedure will bring the end play to specification.

1. Raise the car until the wheel and tire clear the floor.

2. Pry off the wheel cover and remove the grease cap (Fig. 4) from the hub.

3. Wipe the excess grease from the end of the spindle, and remove the adjusting nut cotter pin and nut lock.

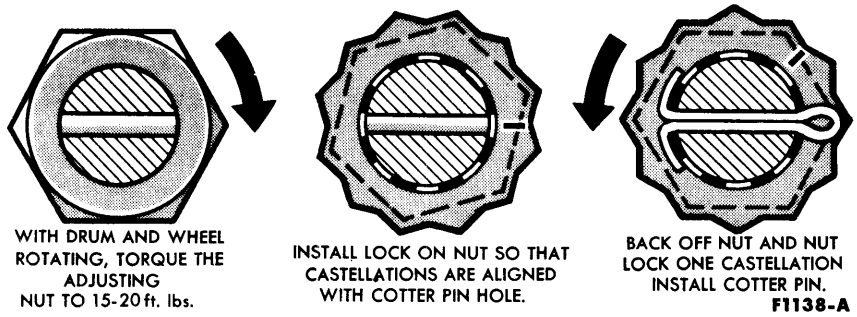

FIG. 5—Front Wheel Bearing Adjustment

4. While rotating the wheel, hub, and drum assembly, torque the adjusting nut to 15-20 ft-lbs to seat the bearings (Fig. 5).

5. Locate the nut lock on the adjusting nut so that the castellations on the lock are aligned with the cotter pin hole in the spindle.

6. Using a 1⅛-inch box wrench, back off both the adjusting nut and the nut lock together until the next castellation on the nut lock aligns with the cotter pin hole in the spindle.

7. Install a new cotter pin, and bend the ends of the cotter pin around the castellated flange of the nut lock.

8. Check the front wheel rotation. If the wheel rotates properly, install the grease cap and the hub cap or wheel cover. If the wheel still rotates roughly or noisily, clean or replace the bearings and cups as required.

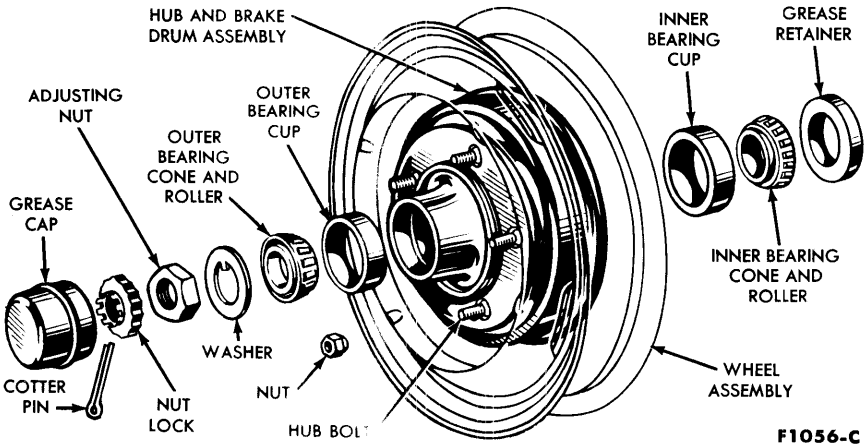

FIG. 4—Front Hub, Bearings, and Grease Retainer

FRONT WHEEL BEARING REPACKING OR REPLACEMENT

If bearing adjustment will not eliminate looseness or rough and noisy operation, the hub and bearings should be cleaned, inspected, and repacked. If the bearing cups or the cone and roller assemblies are worn or damaged, they should be replaced.

1. Remove the hub cap or wheel cover. Remove the grease cap from the hub, remove the cotter pin, nut lock, adjusting nut, and flat washer from the spindle, then remove the outer bearing cone and roller assembly (Fig. 4).

2. Pull the wheel, hub, and drum assembly off the wheel spindle.

If the brake drum will not come off, insert a narrow screwdriver through the brake adjusting hole in the carrier plate, and disengage the adjusting lever from the adjusting screw. While thus holding the adjusting lever away from the adjusting screw, back off the adjusting screw with the brake adjusting tool (Part 8-4, Fig. 6). **Back off the adjustment only if the drum cannot be removed. Be very careful not to burr, chip, or damage the notches in the adjusting screw; otherwise, the self adjusting mechanism will not function properly.**

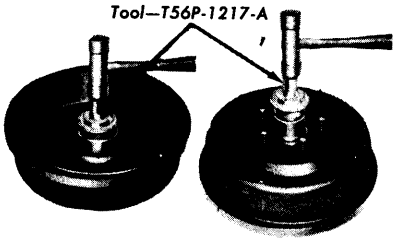

FIG. 6—Front Wheel Bearing Cup Installation

3. Remove the grease retainer and the inner bearing cone and roller assembly from the hub.

4. With a drift, remove the bearing cup(s) if damaged.

5. If a new grease retainer is of the leather type, soak it in light engine oil for at least 30 minutes before installation. Thoroughly clean the spindle and the inside of the hub.

6. If the inner and/or outer bearing cup(s) were removed, install the replacement cup(s) in the hub with the tool shown in Fig. 6. **Be sure to seat the cups properly in the hub.**

7. Pack the inside of the hub with wheel bearing grease. Fill the hub until the grease is flush with the inside diameter of both bearing cups.

8. Pack the bearing cone and roller assemblies with wheel bearing grease. (See Part 12-1 for grease specification.) A bearing packer is desirable for this operation. If a packer is not available, work as much lubricant as possible between the rollers and cages. Lubricate the cone surfaces with grease.

9. Place the inner bearing cone and roller assembly in the inner cup, and install the new grease retainer with the reverse end of the tool shown in Fig. 6. **Be sure that the retainer is properly seated.**

10. Install the wheel, hub, and drum assembly on the wheel spindle. **Keep the hub centered on the spindle to prevent damage to the grease retainer.**

11. Install the outer bearing cone and roller assembly and the flat washer on the spindle, then install the adjusting nut (Fig. 4).

12. Install the lock on the adjusting nut, adjust the wheel bearings, and install a new cotter pin. **Bend the ends of the cotter pin around the castellated flange of the nut lock. This will prevent interference with the radio static collector in the grease cap.** Install the grease cap.

13. Adjust the brake shoes as outlined in Part 8-4, Section 3, and install the hub cap or wheel cover.

FRONT HUB AND DRUM ASSEMBLY REPLACEMENT

When the hub and drum assembly is replaced, new bearings, cups, and oil seal must be installed in the new assembly. The new grease retainer should be soaked in light engine oil at least 30 minutes before installation if it is of the leather type.

1. Remove the wheel and tire assembly from the hub and drum assembly.

2. Remove the old hub and drum assembly from the wheel spindle as outlined in steps 1 and 2 of the foregoing procedure.

3. Clean the new hub and drum assembly. Install new inner and outer bearing cups in the new hub with the tool shown in Fig. 6. **Be sure to seat the cups properly in the hub.**

4. Grease and install the new parts as outlined in steps 7 through 9 of the foregoing procedure.

5. Install the new hub and drum assembly to the wheel spindle. **Keep the hub centered on the spindle to prevent damage to the grease retainer.**

6. Install the remaining parts as outlined in steps 11 and 12 of the foregoing procedure.

7. Position the wheel and tire assembly on the new hub and drum assembly. Install the wheel hub nuts and tighten them alternately in order to draw the wheel evenly against the hub and drum.

8. Adjust the brake shoes as outlined in Part 8-4, Section 2, and install the hub cap or wheel cover.

8 FRONT WHEEL ALIGNMENT

Section		Page
1	Preliminary Front End Inspection	8-5
2	Front Wheel Alignment Inspection	8-5
3	Front Wheel Alignment Adjustments	8-6

Front wheel alignment (caster, camber, and toe-in) inspection and adjustment operations should be performed by someone thoroughly familiar with alignment work and with the checking equipment being used.

1 PRELIMINARY FRONT END INSPECTION

Do not check and adjust front wheel alignment without first making the following inspection for front-end maladjustment, damage, or wear.

1. Check for specified air pressures in all four tires.

2. Raise the front of the car off the floor. Shake each front wheel grasping the upper and lower surfaces of the tire. Check the front suspension ball joints and mountings for looseness, wear, and damage. Check the brake carrier plate mountings. Torque all loose nuts and bolts to specifications. Replace all worn parts (Part 8-3).

3. Check the steering gear mountings and all steering linkage connections for looseness. Torque all mountings to specifications. If any of the linkage is worn or bent, replace the parts (Part 7-1).

4. Check the front wheel bearings. If any in-and-out free play is noticed, adjust the bearings to eliminate the free-play. Replace worn or damaged bearings (Part 8-1).

5. Spin each front wheel with a wheel spinner, and check and balance each wheel as required.

6. Check the action of the shock absorbers (Part 8-3). If the shock absorbers are not in good condition, the car may not settle in a normal, level position, and front wheel alignment may be affected.

2 FRONT WHEEL ALIGNMENT INSPECTION

Do not attempt to check and adjust front wheel alignment without first making a preliminary inspection of the front-end parts.

EQUIPMENT INSTALLATION

Equipment used for front wheel alignment inspection must be accurate. If portable equipment is being used, perform all inspection operations on a level floor.

1. Drive the car in a straight line far enough to establish the straight-ahead position of the front wheels, and then mark the steering wheel hub and the steering column collar (Fig. 1). **Do not adjust the steering wheel spoke position at this time.** If the front wheels are turned at any time during the inspection, align the marks to bring the wheels back to the straight-ahead position.

2. Install the wheel alignment equipment on the car. Whichever type of equipment is used, follow the installation and inspection instructions provided by the equipment manufacturer.

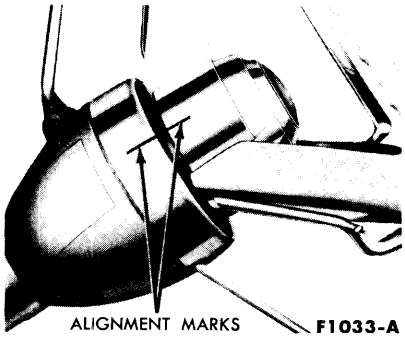

FIG. 1—Typical Straight-Ahead Position Marks

INSPECTION

Check all the factors of front wheel alignment except toe-out on turns before making any adjustments. Toe-out on turns should be checked only after caster, camber, and toe-in have been adjusted to specifications.

CASTER

Check the caster angle at each front wheel. The caster angle is measured between a true vertical line and the center line through the upper and lower ball joints. The correct caster angle, or backward (positive) tilt, is 0° to − 1½° (0° preferred). The maximum difference between both front wheel caster angles should not exceed ½°. However, a difference of not more than ¼° is preferred.

CAMBER

Check the camber angle at each front wheel. The camber angle is measured between a true vertical line and the centerline through the plane of the wheel and tire. The correct camber angle, or outward (positive) tilt, is 0° to + ¾°. The maximum difference between both front wheel camber angles should not exceed ½°. However, a difference of not more than ¼° is preferred.

TOE-IN

Check the toe-in with the front wheels in the straight-ahead position. **Run the engine so that the power steering control valve will be in the center (neutral) position.** Measure the distance between the extreme front and also between the extreme rear of both front wheels. The differ-

ence between these two distances is the toe-in.

Correct toe-in, or inward pointing of both front wheels at the front, is 1/16-3/16 inch.

TOE-OUT ON TURNS

After caster, camber, and toe-in have been adjusted to specifications, check the toe-out on a left turn. When the outside wheel (outer wheel on a turn) is turned inward 20°, the inside wheel should turn outward 20½°. If this angle is not correct, the spindle arm on the inside wheel is probably bent and should be replaced.

3 FRONT WHEEL ALIGNMENT ADJUSTMENTS

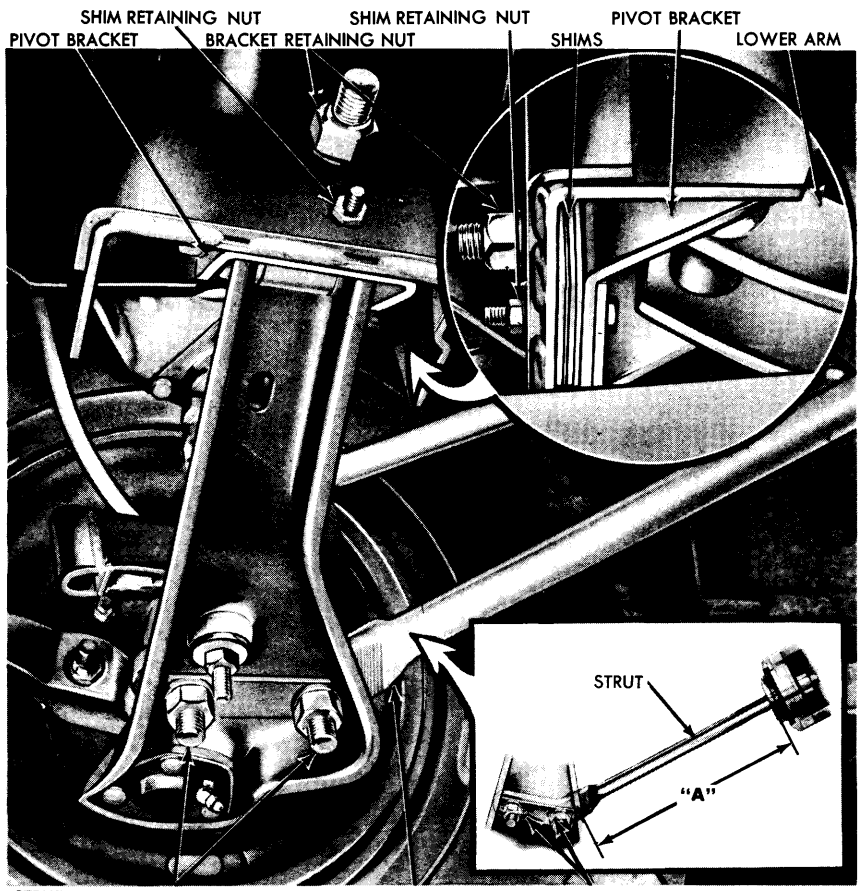

FIG. 2—Caster and Camber Adjustment

After front wheel alignment factors have been checked, make the necessary adjustments. **Do not attempt to adjust front wheel alignment by bending the suspension or steering parts.**

CAMBER ADJUSTMENT

Adjust the camber by removing or installing shims between the pivot bracket of the front suspension lower arm and the mounting bracket on the underbody in the engine compartment (Fig. 2).

The removal of shims between the mounting and pivot brackets will move the lower ball joint inward. The installation of shims between the mounting and pivot brackets will move the lower ball joint outward. Camber adjusting shims are available in several standard shim thicknesses. A 1/16-inch change of shim thickness will change the camber angle ⅓°.

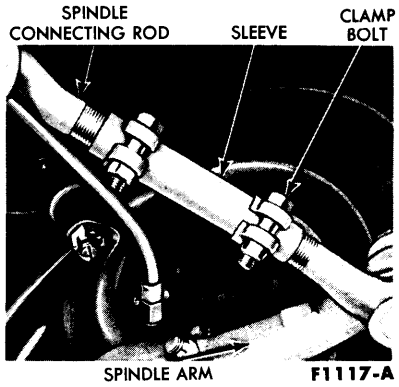

FIG. 3—Spindle Connecting Rod Sleeve

The total shim stack thickness should not exceed 11/16-inch.

CASTER ADJUSTMENT

The caster adjustment is made at the strut by repositioning the strut on the lower arm as shown in Fig. 2. Adjust the caster by loosening the rearward washers, nuts and bolts. Lift the strut so that the strut serations will be free from the serrations on the lower arm. Lengthen the distance between the strut forward mount and the side of the lower arm, (Fig. 2 dimension "A") to decrease the caster angle. Decrease the distance between the strut forward mount and the side of the lower arm, (Fig. 2 dimension "A") to increase the caster angle. Tighten the rearward nuts that retain the strut to the lower arm. Check the caster, camber, and toe-in alignment for the correct settings listed in the specifications.

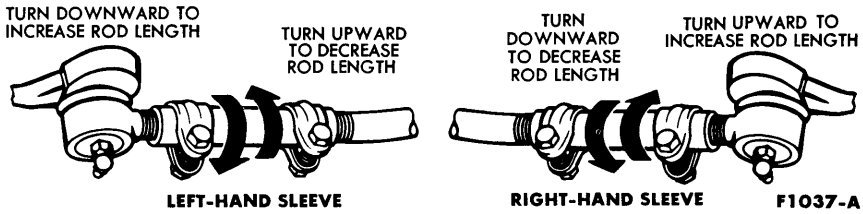

FIG. 4—Spindle Connecting Rod Adjustments

TOE-IN AND STEERING WHEEL ALIGNMENT ADJUSTMENTS

Check the steering wheel spoke position when the front wheels are in the straight-ahead position. If the spokes are not in their normal position, they can be properly adjusted while toe-in is being adjusted.

1. Loosen the two clamp bolts in each spindle connecting rod sleeve (Fig. 3).

2. Adjust toe-in. If the steering wheel spokes are in their normal position, lengthen or shorten both rods equally to obtain correct toe-in (Fig. 4). If the steering wheel spokes are not in their normal position, make the necessary rod adjustments to obtain correct toe-in and steering wheel spoke alignment (Fig. 5).

3. Recheck toe-in and steering wheel spoke alignment. If toe-in is correct and the steering wheel spokes are still not in their normal position, turn both connecting rod sleeves upward or downward the same number of turns to move the steering wheel spokes (Fig. 5).

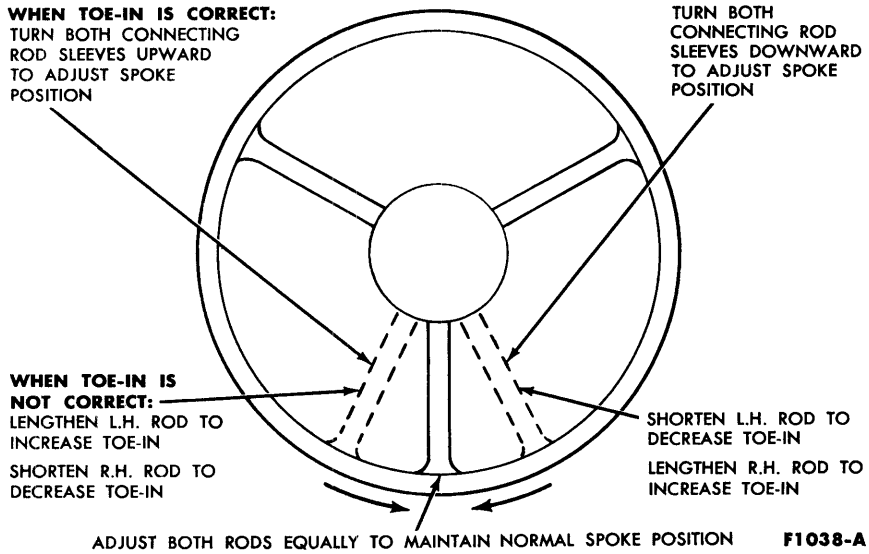

FIG. 5—Toe-In and Steering Wheel Spoke Alignment Adjustments

4. When toe-in and steering wheel spoke alignment are both correct, torque the clamp bolts on both connecting rod sleeves to specifications.

PART 8-3 FRONT AND REAR SUSPENSION

Section		Page
1	Trouble Shooting	8-8
2	Front Suspension Repair	8-8
3	Rear Suspension Repair	8-13

1 TROUBLE SHOOTING

Before performing any trouble-shooting operations, make sure that the tire pressures agree with those specified for the tires being checked.

SYMPTOMS AND CAUSES

Table 1 lists various front and rear suspension trouble symptoms and possible causes. Several of these symptoms are also common to wheel and tire and steering troubles. For this reason, be sure that the cause of the trouble is in the front or rear suspension before adjusting, repairing, or replacing any of the suspension parts.

TABLE 1—Front and Rear Suspension Trouble Symptoms and Possible Causes

Possible Causes of Trouble Symptoms	Trouble Symptoms								
	Abnormal or Irregular Tire Wear	Squeals, Thumps, or Rattles	Sag at One Wheel	Hard or Rough Ride	Shimmy or Wheel Tramp	Side-to-Side Wander	Pull to One Side	Body Sway or Roll	Dog Tracking
Incorrect Tire Pressure	x	x	x	x	x	x	x	x	
Incorrect Front Wheel Alignment	x	x			x	x	x		
Incorrect Front Wheel Bearing Adjustment	x	x			x		x		
Tire Sizes Not Uniform	x		x				x		
Wheel Out of Balance	x	x		x	x				
Out-of-Round Wheel or Brake Drum	x	x		x	x				
Unequal Brake Adjustment							x		
Sagging or Broken Spring	x	x	x	x		x	x	x	
Overloaded Spring or Tire	x		x	x					
Loose or Worn Shock Absorber		x	x	x				x	
Loose or Worn Suspension Arm Bushings		x							
Lack of Lubrication		x							
Tie Bolt Off-Center									x
Rear Spring Front Hanger Mislocated									x

2 FRONT SUSPENSION REPAIR

For necessary hoisting and jacking procedures, see Part 11-1. The 1962 Thunderbird front suspension is shown in Fig. 1. **Whenever any part of the front suspension has been removed and installed, front wheel alignment must be checked.**

UPPER BALL JOINT REPLACEMENT (ARM IN CAR)

1. Raise the front of the car and position safety stands under the chassis.

2. Remove the wheel and tire assembly.

3. Using a large chisel, cut off the three upper ball joint retaining rivets. If the rivets can not be removed with a chisel, use a drill. **Do not bend the arm when driving out the rivets.**

4. Remove the cotter pin and loosen the upper ball joint stud nut. Place a box wrench over the lower end of tool T57P-3006-A, and position the tool as shown in Fig. 2. **The tool should seat firmly against the ends of both studs, and not against the lower stud nut.** It may be necessary to remove the cotter pin from the lower ball joint stud, if the cotter pin prevents the tool from seating on the lower stud.

5. Turn the wrench until both studs are under tension, then loosen the stud from the spindle by tapping

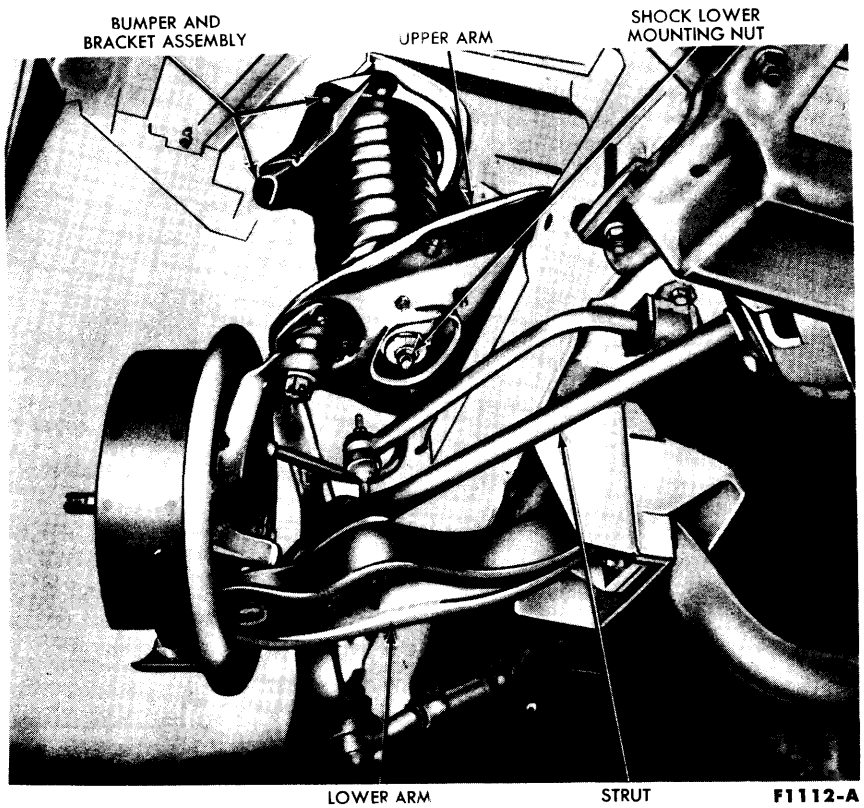

FIG. 1—Front Suspension

the spindle near the upper stud with a hammer. **Do not loosen the stud with tool pressure alone.** Remove the ball joint.

6. Clean the end of the arm, and remove all burrs from the hole edges. Check for cracks in the metal at the holes, and replace the arm if it is cracked. See upper arm replacement.

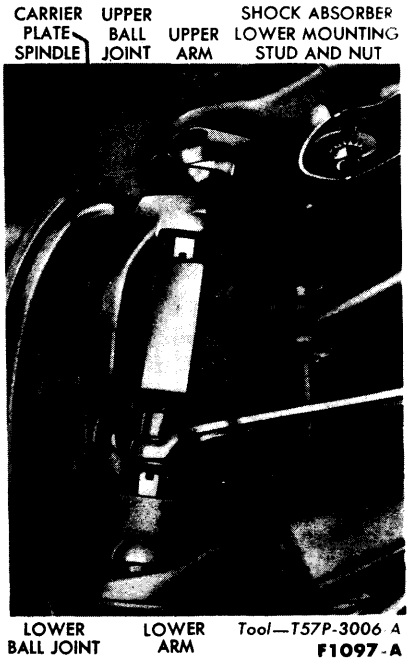

FIG. 2—Loosening Ball Joint Stud

7. Attach the new ball joint to the upper arm. **Use only the specified bolts, nuts and washers. Do not rivet the new ball joint to the arm.** Tighten the nuts to specifications.

8. Position the ball joint stud in the spindle bore, and tighten the stud nut to specifications. Install a new cotter pin. Tighten the nut, if necessary, to align the cotter pin hole.

9. Lubricate the ball joint, and install the wheel and tire assembly.

10. Remove the safety stands, lower the car, and check camber, caster, and toe-in.

FRONT WHEEL SPINDLE REPLACEMENT

REMOVAL

1. Raise the front of the car and position safety stands under the chassis.

2. Remove the wheel, hub, and drum.

3. Remove the four retaining bolts and nuts, then remove the brake carrier plate from the spindle. Wire the brake assembly to a convenient place on the chassis so as to avoid breaking the brake hose.

4. Remove the cotter pin and retaining nut, then disconnect the spindle connecting rod end from the spindle arm with tool CJ89-1.

5. Remove the cotter pins and loosen the ball joint stud nuts.

6. Position a box wrench over the lower end of tool T57P-3006-A and position the tool as shown in Fig. 2. **The tool should seat firmly against the ends of both studs, not against the stud nuts.**

7. Turn the wrench until the tool places the studs under tension, then loosen the studs in the spindle by tapping the spindle near the studs with a hammer. **Do not loosen the studs in the spindle with tool pressure alone.**

8. Remove the stud nuts and the spindle from both studs.

INSTALLATION

1. Position the new spindle to the upper and lower ball joint studs, install the stud nuts, and tighten the nuts to specifications. Continue to tighten both nuts until the cotter pin holes line up with the slots, then install new cotter pins.

2. Connect the spindle connecting rod end to the spindle arm, and install the retaining nut and cotter pin. Tighten the nut to specifications.

3. Assemble the brake carrier plate and dust shield to the spindle, install the retaining bolts and nuts and tighten to specifications.

4. Install the wheel, hub, and drum, and adjust the wheel bearing.

5. Lubricate the steering stop on the lower arm and the mating flat on the spindle. Refer to Part 12-1.

6. Remove the safety stands, lower the car, and check camber, caster, and toe-in.

FRONT SHOCK ABSORBER REPLACEMENT

1. Raise the front of the car, position a safety stand under the lower suspension arm, then lower the car slightly.

2. Disconnect the lower end of the shock absorber from the spring lower seat by removing the retaining nut washer and insulator (Fig. 1).

3. Open the hood, then remove the

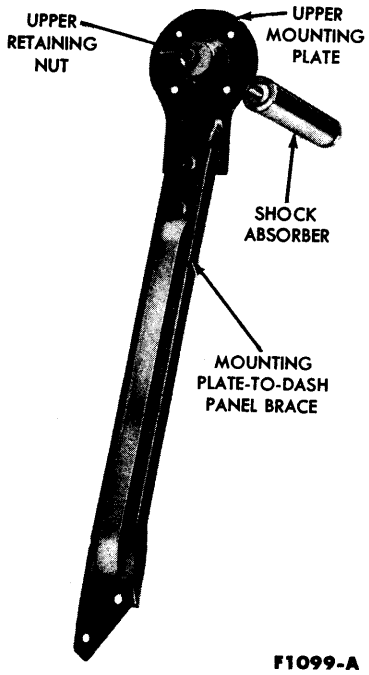

FIG. 3—Front Shock Absorber Mounting Assembly

four shock absorber upper mounting plate retaining bolts and the two bolts that attach the mounting plate-to-dash panel brace at the dash panel (Fig. 3). Remove the shock absorber, upper mounting plate, and upper mounting plate-to-dash panel brace as an assembly.

4. Remove the shock absorber upper retaining nut, insulator, and washer, then separate the shock absorber from the upper mounting plate (Fig. 3).

5. Assemble the shock absorber upper mounting stud to the mounting plate with the washer and insulator, and secure with the retaining nut (Fig. 3).

6. Position the shock absorber and mounting assembly in place, then install the upper mounting plate bolts and the dash panel brace bolts.

7. Lower the car slightly with the safety stand under the lower control arm. This will raise the upper arm sufficiently to position the lower shock absorber stud through the hole at the bottom of the spring lower seat. Secure the lower end of the shock absorber to the spring seat by installing the insulator, washer and retaining nut on the shock absorber stud (Fig. 1).

8. Remove the safety stands, and lower the car.

FRONT SPRING REPLACEMENT

REMOVAL

1. Raise the front of the car, posiiton a safety stand under the lower suspension arm, then lower the car slightly.

2. Remove the wheel and tire assembly.

3. Disconnect the lower end of the shock absorber from the spring lower seat by removing the retaining nut, washer and insulator (Fig. 1).

4. Open the hood, then remove the four shock absorber upper mounting plate retaining bolts and the two bolts that attach the mounting plate-to-dash panel brace at the dash panel. (Fig. 3). Remove the shock absorber, upper mounting plate, and upper mounting plate-to-dash panel brace as an assembly.

5. Remove the four retaining bolts and washers, then remove the upper suspension arm bumper and bracket assembly (Fig. 1).

6. Raise the car slightly off the safety stand in order to lower the upper control arm.

7. Insert the lock bar of tool T61B-5310-A through the top of the spring, and position the bar on the seventh coil from the bottom (Fig. 4). Slide the tool bearing over the tool shaft against the integral nut. Insert the shaft through the shock absorber mounting hole in the spring lower seat so that the end of the shaft will thread into the lock bar. As the shaft is turned into the lock bar the spring will compress.

8. Compress the spring until the top coils are drawn out of the spring upper seat. Remove the tapered shim, and pivot the spring outward

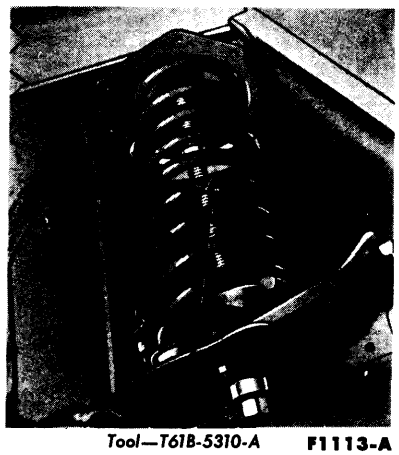
Tool—T61B-5310-A F1113-A

FIG. 4—Front Spring Remover Tool

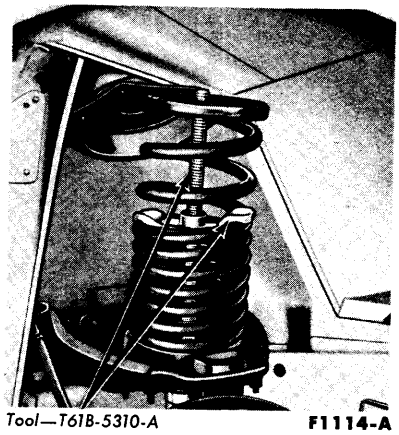
Tool—T61B-5310-A F1114-A

FIG. 5—Front Spring Compressed

(Fig. 5). Turn the tool shaft out of the lock bar to release the spring.

9. Remove the tool bar and shaft from the spring, and lift the spring out of the lower seat.

INSTALLATION

1. Install the tapered shim in the top of the spring housing with the thick portion of the shim toward the centerline of the car. Retain the shim in the housing with tape.

2. Insert one helix type insulator between the two top coils of the spring and attach the other to the bottom coil (Fig. 6). Secure both insulators with tape.

3. Place the flat rubber insulator over the top of the spring, and secure it with tape in three places as shown in Fig. 5.

4. With the tapered shim and insulators in place, set the lower end of the spring in the lower seat.

5. Slide the bearing of tool T61B-5310-A over the tool shaft against the integral nut. Insert the shaft through the shock absorber mounting hole in the spring lower seat.

6. Insert the lock bar of tool T61B-5310-A on the seventh coil from the spring lower end.

7. Thread the shaft of the tool into the lock bar until the spring is completely compressed, then tilt the spring inward so that the top coils are aligned with the spring upper seat.

8. Turn the tool shaft out of the tool lock bar. As the shaft is turned, the spring will release its top coils into the upper seat (Fig. 4).

9. Remove the lock bar of tool T61B-5310-A through the top of the spring. Slide the tool shaft out of the

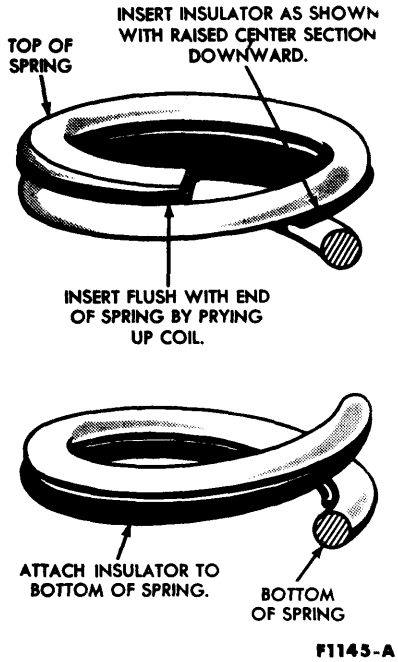

FIG. 6—Front Spring Insulator Installation

shock absorber mounting hole in the spring lower seat.

10. Position the shock absorber and mounting assembly in place (Fig. 3), then install the upper mounting plate bolts and the dash panel brace bolts.

11. Lower the car slightly with the safety stand under the lower control arm. This will raise the upper arm sufficiently to position the lower shock absorber stud through the hole at the bottom of the spring lower seat. Secure the lower end of the shock absorber to the spring seat by installing the insulator, washer and retaining nut on the shock absorber stud (Fig.1).

12. Install the upper arm bumper and bracket assembly and the four retaining bolts.

13. Install the wheel and tire assembly.

14. Remove the safety stands, lower the car, and check caster, camber, and toe-in.

UPPER ARM REPLACEMENT

REMOVAL

1. Raise the front of the car, position a safety stand under the lower suspension arm, then lower the car slightly.

2. Remove the wheel and tire assembly.

3. Remove the shock absorber assembly, the bumper and bracket, and the coil spring assembly as outlined in the FRONT SPRING REPLACEMENT procedure.

4. Remove the cotter pin and loosen the upper ball joint stud nut. Place a box wrench over lower end of tool T57P-3006-A as shown in Fig. 2. **The tool should seat firmly against the ends of both studs and not against the lower stud nut.** It may be necessary to remove the cotter pin from the lower ball joint stud, if the cotter pin prevents the tool from seating on the lower stud.

5. Turn the wrench until both studs are under tension, then loosen the upper stud from the spindle by tapping the spindle near the upper stud with a hammer. **Do not loosen the stud with tool pressure alone.** Disengage the upper ball joint and stud from the spindle.

6. Remove the upper arm inner shaft retaining nuts and washers, then remove the arm assembly from the mounting studs on the underbody.

7. Remove the four stud nuts that retain the spring lower seat assembly to the upper arm (Fig. 7).

8. Remove the grease fittings from the pivot bolts (spring seat bushings), then remove the spring seat assembly from the arm.

INSTALLATION

1. Install the studs of the spring seat through the holes in the new upper arm, and secure the seat to the arm with stud nuts (Fig. 7).

2. Install the grease fittings in the pivot bolts (spring seat bushings).

3. Position the upper arm and inner shaft assembly on the mounting studs and secure with nuts and washers. Tighten the nuts to specified torque.

4. Insert the upper ball joint stud in the spindle, and install the stud nut. Tighten the nut to specifications, then continue to tighten until the cotter pin holes are aligned with the slots. Install a new cotter pin.

5. Install the coil spring, the shock absorber, and the bumper and bracket assembly as outlined in the FRONT SPRING REPLACEMENT procedure.

6. Install the wheel and tire assembly.

7. Remove the safety stand, lower the car, and check camber, caster, and toe-in.

UPPER ARM PARTS INSPECTION

Inspect the upper arm, the inner shaft, and the spring seat for cracks, bends or other damage. Replace the parts as required.

Replacement arms come with the bushings, inner shaft, and ball joint installed. If the original arm is to be used, these components should be replaced on the bench.

UPPER ARM OVERHAUL—ARM REMOVED

BUSHING AND INNER SHAFT REPLACEMENT

Always replace both upper arm bushings, if either bushing is worn or damaged. Install only new bushings when replacing the inner shaft.

1. Position the upper arm inner shaft in a vise, then unscrew the bushings from the shaft and arm. Remove

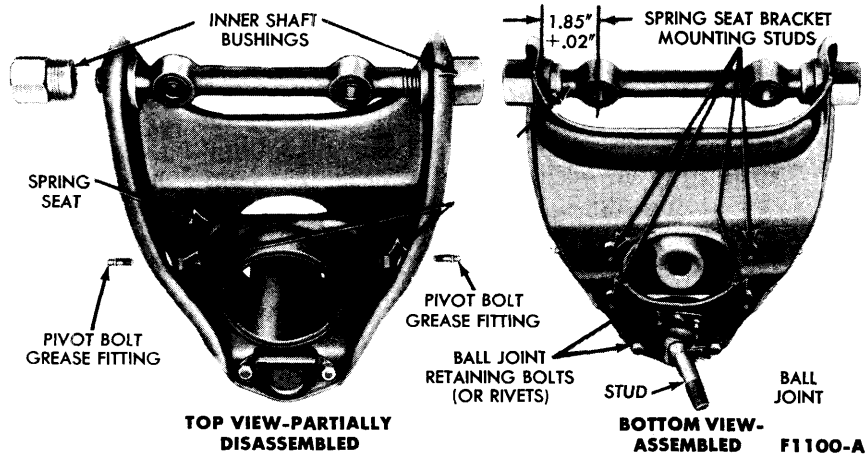

FIG. 7—Upper Suspension Arm

the assembly from the vise, and separate the inner shaft from the arm.

2. Position the shaft in the arm, apply grease to the new bushings (Part 12-1), and install the bushings loose on the shaft and arm. **Turn the bushings so that the shaft is exactly centered in the arm.** The shaft will be properly centered when located at the dimension shown in Fig. 7.

3. Fabricate a 9½-inch spacer from a section of ¾-inch diameter pipe or metal of comparable size and strength.

4. Position the arm and inner shaft assembly in a vise. Position the spacer parallel with the inner shaft, and force the spacer between the flanges of the upper arm.

If the spacer can not be forced between the arm flanges due to excessive distortion, replace the upper arm assembly.

5. With the spacer positioned in the arm, torque the bushings to specification. Move the arm on the shaft to be sure that no binding exists, then remove the spacer.

BALL JOINT REPLACEMENT

The upper ball joint cannot be repaired and must be replaced if it is worn or damaged.

1. Remove the ball joint from the arm. If the ball joint is riveted to the arm, drill a ⅛-inch pilot hole completely through each rivet, and then drill off the rivet head through the pilot hole with a ⅜-inch drill. Drive all rivets out of the holes.

2. Clean the end of the arm, and remove all burrs from the hole edges. Check for cracks in the metal at the holes, and replace the arm if it is cracked.

3. Install a new ball joint on the arm. **Use only the specified bolts, nuts, and washers. Do not attempt to rivet the new ball joint to the arm.**

4. Torque the ball joint retaining nuts and bolts to specifications.

5. Lubricate the ball joint.

LOWER ARM REPLACEMENT

REMOVAL

1. Raise the front of the car, and install safety stands.

2. Remove the wheel, hub, and drum assembly.

3. Remove the four retaining bolts and nuts, and remove the brake carrier plate from the spindle. Support the brake assembly with wire to relieve the weight on the brake hose.

FIG. 8—Lower Suspension Arm Installed

4. Remove the link nut underneath the arm (Fig. 8), and disconnect the stabilizer link from the arm.

5. Remove the retaining nuts, bolts, washers and plates, then disconnect the strut from the lower arm (Fig. 8).

6. Remove the cotter pin and loosen the lower ball joint stud nut. Place a box wrench over the end of tool T57P-3006-A, and position the tool 180° from the position shown in Fig. 2 (wrench at the top). **The tool should seat firmly against the ends of both studs, not against the upper stud nut.** It may be necessary to remove the cotter pin from the upper ball joint stud, if the cotter pin prevents the tool from seating on the upper stud.

7. Turn the wrench until both studs are under tension, then loosen the stud from the spindle by tapping the spindle near the lower stud with a hammer. **Do not loosen the stud with tool pressure alone.** Disengage the lower ball joint and stud from the spindle.

8. Remove the pivot bracket retaining nut and the shim retaining nut (Fig. 8), then remove the bracket and lower arm assembly from the car.

9. Place the assembly in a vise and remove the nut from the pivot bolt

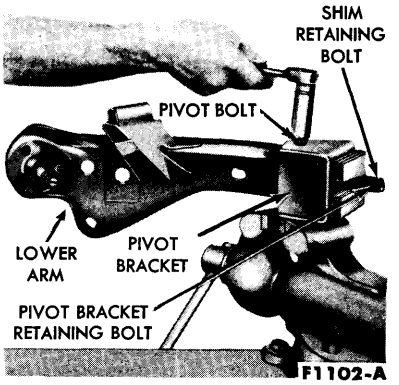

FIG. 9—Lower Suspension Arm Assembly

(Fig. 9). Remove the pivot bolt, and separate the pivot bracket from the lower arm.

INSTALLATION

1. Assemble the pivot bracket to the new lower arm with the pivot bolt, place the assembly in a vise, and install the pivot bolt nut (Fig. 9). Tighten the nut snug. Do not torque until the lower arm assembly is installed in the car.

2. Slide the shims over the retaining bolts against the pivot bracket (Fig. 9), then mount the lower arm and pivot bracket assembly to the chassis mounting bracket (Fig. 8). Install the pivot bracket and shim retaining nuts.

3. Insert the lower ball joint stud in the lower bore of the wheel spindle, and install the stud nut. Tighten the nut to specifications, then continue to tighten until the cotter pin holes are aligned with the slots. Install a new cotter pin.

4. Position and connect the lower arm strut to the lower suspension arm with retaining plates, bolts, washers, and nuts (Fig. 8). Torque the nuts.

5. Connect the stabilizer bar link to the lower suspension arm, and install the washers, bushings and link retaining nut. Tighten the nut to specifications.

6. Tighten the pivot bolt and nut at the lower arm pivot bracket to specifications.

7. Lubricate the steering stop on the lower arm and the mating flat on the spindle. Refer to Part 12-1.

8. Install the brake carrier plate and dust shield to the spindle and tighten the retaining nuts to specifications.

9. Install the wheel, hub, and drum assembly.

10. Remove the safety stands, lower the car, and check the camber, caster, and toe-in.

LOWER ARM PARTS INSPECTION

Inspect the lower arm, the inner bushings, and the pivot bolt for cracks, bends, wear or other damage, and replace the arm if necessary.

Install the nut on the ball joint stud, and turn the stud in the ball joint with a torque wrench. If the turning effort is not within specifications, replace the ball joint.

Replacement arms come with the ball joint installed. If the original arm is to be used, the ball joint should be replaced on the bench.

LOWER BALL JOINT REPLACEMENT

The lower ball joint cannot be repaired and must be replaced if it is worn or damaged.

REPLACEMENT

1. Remove the lower arm as outlined under LOWER ARM REPLACEMENT.

2. Remove the ball joint from the arm. If the ball joint is riveted to the arm, drill a ⅛-inch pilot hole completely through each rivet, and then drill off the rivet head through the pilot hole with a ⅜-inch drill. Drive all rivets out of the holes.

3. Clean the end of the arm, and remove all burrs from the hole edges. Check for cracks in the metal at the holes, and replace the arm if it is cracked.

4. Install a new ball joint on the arm. **Use only the specified bolts, nuts, and washers. Do not attempt to rivet the new ball joint to the arm.**

5. Torque the ball joint retaining nuts and bolts to specifications.

6. Install the lower arm as outlined under LOWER ARM REPLACEMENT, and lubricate the ball joint.

STABILIZER REPAIR

To replace the end bushings on each stabilizer link, use the following procedure.

1. Raise the car on a hoist.

2. Remove the link-to-stabilizer bar retaining nut, washers, and the insulators, and disconnect the link from the bar.

3. Remove the link-to-lower arm retaining nut, washers, and insulators, and remove the link from the arm.

4. Assemble the link and new washers and insulators to the lower arm, then install the link-to-lower arm retaining nut.

5. Connect the link to the bar with new washers and insulators and secure with the retaining nut.

6. Lower the car.

3 REAR SUSPENSION REPAIR

REAR SPRING REMOVAL

1. Raise the car until the rear wheels clear the floor, and place supports beneath the underbody and beneath the axle.

2. Disconnect the coil spring that retains the parking brake cable. Position the cable out of the way.

3. Disconnect the lower end of the shock absorber from the spring clip plate, and position out of the way.

4. Disconnect the brake line connector from the axle housing in order to relieve the strain on the brake hose when the axle is lowered.

5. Lower the rear axle slightly to reduce some of the spring load; then remove the spring clip (U-bolt) nuts, the clips (U-bolts) and spring clip plate (Fig. 10). Remove the lower insulator and retainer.

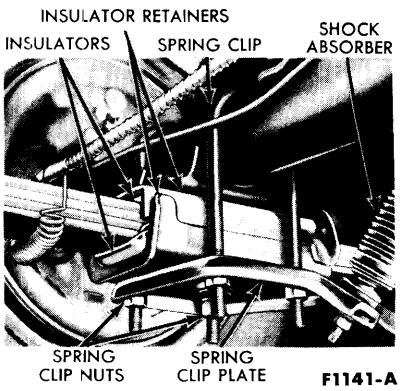

FIG. 10—Rear Spring Center Mounting

6. Remove the spring front hanger-to-underbody mounting bolts (Fig. 11).

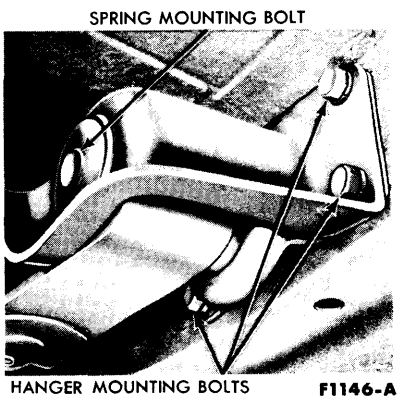

FIG. 11—Rear Spring Front Hanger Installation

7. Remove the rear shackle nuts and shackle bar, then remove the shackle assembly from the rear

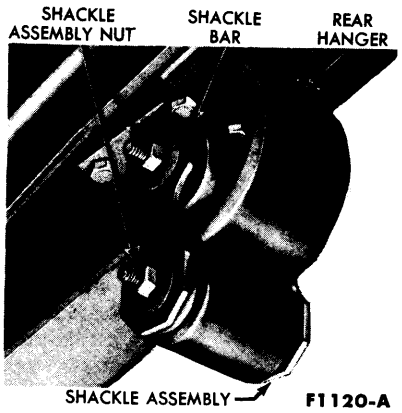

FIG. 12—Rear Spring and Rear Hanger

hanger and spring (Fig. 12).

8. Remove the spring and front hanger as an assembly.

9. Remove the upper insulator and retainer from the spring.

REAR SPRING INSPECTION AND REPAIR (SPRING REMOVED)

FRONT HANGER ASSEMBLY

If the front hanger, bracket, or bushings are to be replaced, proceed as follows.

1. Remove the nut from the spring mounting bolt, and remove the bracket from the bolt and hanger (Fig. 13).

2. Tap the spring mounting bolt out of the bushings and hanger, then separate the hanger from the spring. Remove the bushings.

3. Position the inner bushing and hanger to the spring eye, position the outer bushing to the spring eye, then insert the spring mounting bolt (Fig. 13). **Be sure that the bolt head is fully seated in the hanger (Inset, Fig. 13).**

4. Assemble the bracket to the spring mounting bolt and hanger, install the nut, and torque to specification (Fig. 13).

REAR SHACKLE AND HANGER ASSEMBLY

Inspect the rear shackle, bushings, and studs for wear or damage. Replace parts where necessary.

If the rear shackle bushings are to be replaced, it will be necessary to remove the rear hanger assembly. Torque the hanger attaching bolts to specification when re-installed.

SPRING LEAVES AND TIE BOLT

Check for broken spring leaves. Inpsect the anti-squeak inserts between the leaves, and replace them if they are worn. **The spring leaves must be dry and free of oil and dirt before new inserts are installed.**

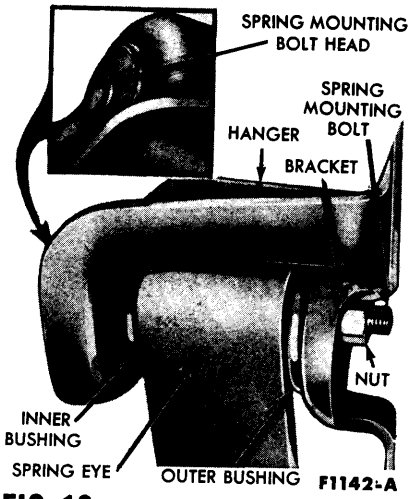

FIG. 13—Rear Spring Front Hanger Assembly

Inspect the spring clips for worn or damaged threads. Check the spring clip plate and insulator retainers for distortion.

If the spring center tie bolt requires replacement, clamp the spring in a vise to keep the spring compressed during bolt removal and installation.

REAR SPRING INSTALLATION

1. Position the rear eye of the spring to the rear hanger and install the shackle assembly to the spring and hanger (Fig. 12). The rear eye is at the long end of the spring from the center tie bolt. Install the shackle bar and retaining nuts. **Do not tighten the nuts at this time.**

2. Position the spring and front hanger assembly to the underbody, and install the hanger mounting bolts (Fig. 11). Do not tighten the bolts at this time.

3. Install the upper insulator and retainer on the spring with the retainer flange forward (Fig. 10).

4. Lower the axle housing onto the upper insulator and retainer. Install the lower insulator, insulator retainer (flange to the rear), spring clips (U-bolts), plate, and (U-bolt) clip nuts. Do not tighten the spring clip nuts at this time.

5. Torque the rear shackle nuts and the front hanger mounting bolts to specification.

6. Torque the spring clip nuts evenly to specification. Make sure that the lower insulator retainer contacts the upper retainer.

7. Raise the axle housing, and connect the brake line connector to the axle housing.

8. Connect the lower end of the shock absorber to the spring clip plate.

9. Connect the coil spring to the parking brake cable.

REAR SHOCK ABSORBER REMOVAL

1. Raise the rear end of the car. Remove the bolts that retain the shock absorber mounting bracket to the underbody (Fig. 14).

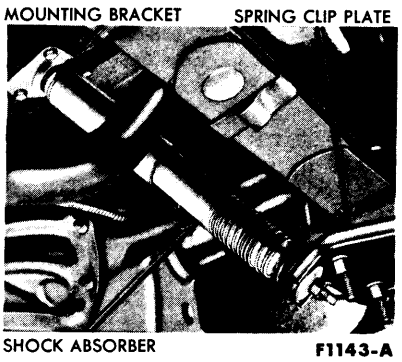

FIG. 14—Rear Shock Absorber Mounting

2. Remove the retaining nut, outer washer and bushing from the shock absorber at the spring clip plate. Compress the shock absorber and remove it from the car.

3. Remove the nut, outer washer, and bushing that retain the shock absorber to the mounting bracket, and remove the bracket.

4. If the shock absorber is serviceable and requires new bushings remove the inner bushings and washers from the shock absorber studs.

REAR SHOCK ABSORBER INSTALLATION

1. Place the inner washer and bushing on each shock absorber stud.

2. Connect the upper stud to the mounting bracket, and install the bushing, washer, and nut on the stud. Torque the nut to specifications.

3. Connect the mounting bracket and shock absorber to the underbody (Fig. 14). Torque the bolts to specifications.

4. Connect the lower stud to the spring clip plate, and install the bushing, washer, and nut on the stud. **Be sure the spring clip plate is free of burrs.** Tighten the nut to specifications.

PART 8-4 HYDRAULIC AND PARKING BRAKES

Section	Page
1. Trouble Shooting	8-16
2. Master Cylinder Hydraulic Line and Brake Pedal Repair	8-17
3. Brake Drum and Brake Assembly Repair	8-19
4. Parking Brake Repair	8-23

The hydraulic brake system on the 1962 Thunderbird employs single anchor, internal expanding and self adjusting brake assemblies which are powered by a vacuum booster as standard equipment.

The master cylinder converts physical force from the brake pedal and booster into hydraulic pressure against the pistons in the wheel cylinders. The wheel cylinder pistons in turn convert hydraulic pressure back into physical force at the brake shoes.

An independent manually-operated parking brake operates the rear wheel brake shoes through a mechanical cable linkage.

The self-adjusting brake mechanism consists of a cable, cable guide, adjusting lever, and adjuster spring (Fig. 1). The cable is hooked over the anchor pin at the top and is connected to the lever at the bottom. The cable is connected to the secondary brake shoe by means of the cable guide. The adjuster spring is hooked to the primary brake shoe and to the lever. The automatic adjuster operates only when the brakes are applied while the car is moving rearward and only when the secondary shoe is free to move toward the drum beyond a predetermined point.

With the car moving rearward and the brakes applied, the "wrap-around" action of the shoes following the drum forces the upper end of the primary shoe against the anchor pin. The action of the wheel cylinder moves the upper end of the secondary shoe away from the anchor pin. The movement of the secondary shoe causes the cable to pull the adjusting lever upward and against the end of a tooth on the adjusting screw star-wheel. The upward travel of the lever increases as lining wear increases. When the lever can move upward far enough, it passes over the end of the tooth and engages the tooth. When the brakes are released, the adjuster spring pulls the lever downward causing the star-wheel to turn and expand the shoes. The star-wheel is turned one tooth at a time as the linings progressively wear.

With the car moving forward and the brakes applied, the secondary shoe is against the anchor pin and

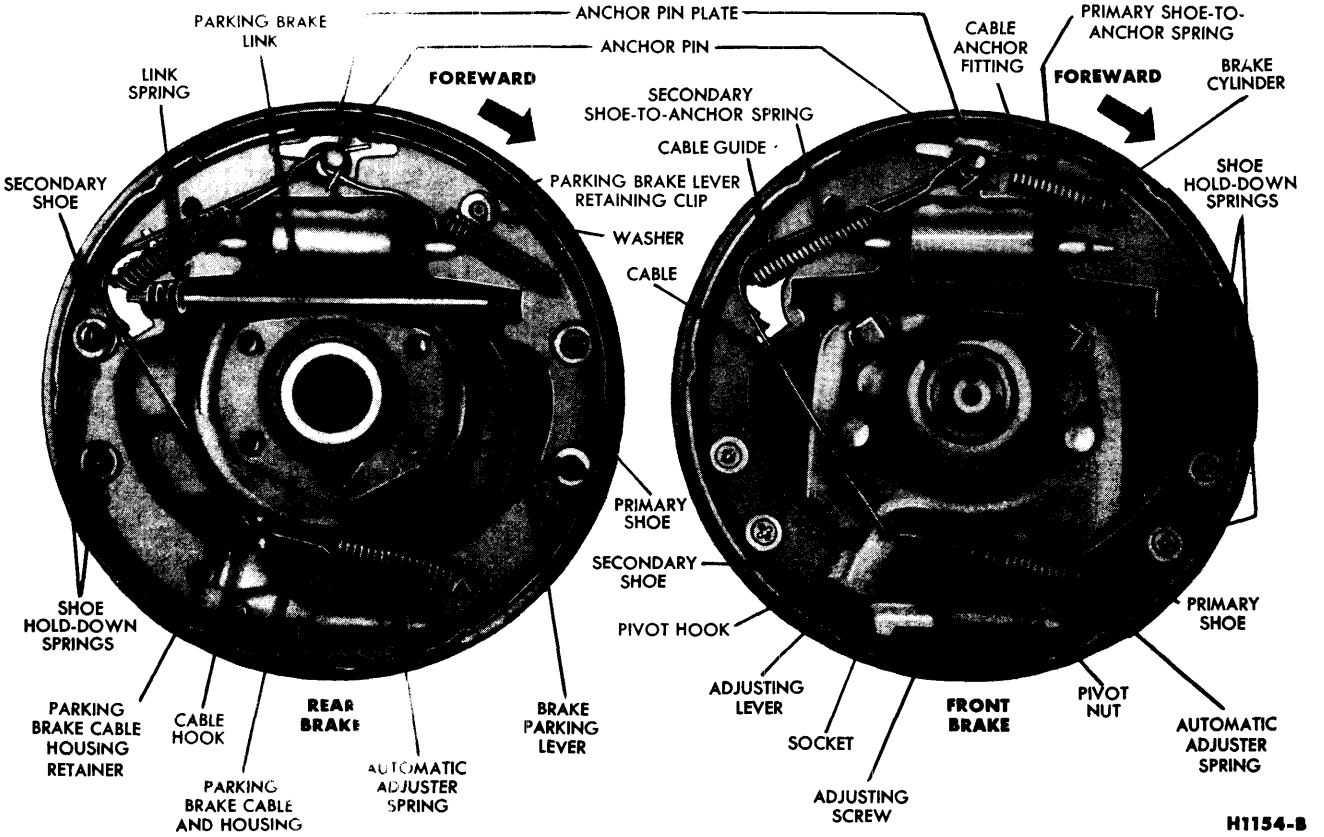

FIG. 1—Self Adjusting Brake Assemblies

the primary shoe is moved toward the drum. Therefore, the adjuster does not operate.

The rear brake assembly is basically the same as the front brake. The conventional parking brake lever, link, and spring are used in the rear brake, but the parking brake lever is mounted to the primary rather than the secondary shoe.

The anchor pins on all brakes are fixed and non-adjustable.

1 TROUBLE SHOOTING

The preliminary checks given here, and the brake trouble symptoms and possible causes described in Table 1, apply to all parts of the hydraulic and parking brakes.

Before performing any of the preliminary checks or trouble checks, stop the engine and depress the brake pedal several times to eliminate vacuum from the booster system.

PRELIMINARY CHECKS

Check the fluid level in the master cylinder, and add FoMoCo **heavy-duty** brake fluid if required.

Push the brake pedal down as far as it will go while the car is standing still. If the pedal can be pushed down more than halfway between the released position and the floor, check the brake adjustment and the automatic adjusters.

Apply a steady pressure to the brake pedal. If it moves slowly toward the floor, check for leaks in the hydraulic system.

If the brake pedal movement feels spongy, bleed the hydraulic system to remove air from the lines and cylinders.

Should one of the brakes be locked and the car must be moved, open the brake cylinder bleeder screw long enough to let out a few drops of brake fluid. **This bleeding operation will release the brakes, but it will not correct the cause of the trouble.**

ROAD TEST CHECKS

The car should be road tested only if the brakes will safely stop the car.

Apply the brakes at a speed of 25-30 mph to see if the car stops in a straight line. High-speed "panic" stops are not necessary to check for brake pull. If the brakes pull the car to one side, check the brake adjustment and the automatic adjusters.

Apply the brakes hard without locking the wheels at a speed of about 50 mph, and check for brake pedal chatter or surge. This symptom is usually caused by an out-of-round brake drum.

TABLE 1—Brake Trouble Symptoms and Possible Causes

Possible Causes of Trouble Symptoms	Trouble Symptoms												
	One Brake Drags	All Brakes Drag	Hard Pedal	Spongy Pedal	Car Pulls to One Side	One Wheel Locks	Brakes Chatter	Excessive Pedal Travel	Pedal Gradually Goes to Floor	Brakes Uneven	Low Pedal Reserve	Noisy or Grabbing Brakes	Brakes Do Not Apply
Damaged Linkage			x					x					
Brake Line Restricted	x	x	x		x								
Leaks or Insufficient Fluid				x				x	x				x
Improper Tire Pressure					x					x			
Improperly Adjusted or Worn Wheel Bearing	x				x								
Distorted or Improperly Adjusted Brake Shoe	x		x			x		x			x	x	
Faulty Retracting Spring	x				x								
Drum Out of Round	x				x		x						
Linings Glazed or Worn			x		x		x	x			x	x	x
Oil or Grease on Lining					x	x	x			x		x	x
Loose Carrier Plate	x					x	x						
Loose Lining							x						
Scored Drum										x		x	
Dirt on Drum-Lining Surface												x	
Faulty Brake Cylinder	x				x	x						x	
Dirty Brake Fluid	x	x								x			x
Faulty Master Cylinder		x							x				x
Air in Hydraulic System	x			x				x					x
Self Adjusters Not Operating					x			x		x			

TROUBLE DIAGNOSIS

BRAKES DO NOT APPLY	If the brake pedal travels all the way down to the floor without noticeable brake action, check the brake fluid level in the master cylinder reservoir. Refill the reservoir, if necessary, with heavy-duty FoMoCo brake fluid. Check the entire hydraulic system for fluid leaks, and make the necessary repairs. If the brake pedal feels spongy when pushed down, air has entered the hydraulic lines. Air can enter the lines if the fluid level in the master cylinder reservoir is too low, or if the brake wheel cylinder pistons are not held firmly in place when the	brake shoes are serviced. A defective check valve can cause a loss of residual pressure in the system causing air to enter at the wheel cylinder piston. Bleed the system to remove air from the lines, and adjust the brakes. Refill the master cylinder reservoir with heavy-duty brake fluid. If the brakes do not apply after making these checks and adjustments, fluid may be leaking past the piston cups in the master cylinder or brake wheel cylinder(s). If the trouble is in the master cylinder or brake wheel cylinder(s), remove and repair.
LOW PEDAL RESERVE	Check for air in the brake lines and bleed the system if necessary.	Adjust the brakes or replace the brake shoes as needed.
UNEVEN, NOISY, GRABBING, OR HARD OPERATING BRAKES	Remove the brake drums, and make a complete inspection of the brake assemblies to determine the cause of the trouble. Excessive dust and dirt in the brake lining rivet holes or in the brake drum can cause brake squeal. Remove the dirt with a scraper and an air hose. Drums which are out of round, or loose at the hub, frozen piston(s), defective check valve, improper brake shoe adjustment, warped or mis-	aligned shoes and webs, restricted brake lines, glazed or greasy linings, and incorrectly ground or wrong linings are a few of the causes for uneven, noisy, pulling, grabbing, or hard brakes. Adjust or replace the necessary parts to eliminate the trouble. Lining glaze can be removed by rubbing the lining with the medium-grade sandpaper until the lining has a dull finish. **Always adjust the brake assemblies after correcting these brake troubles.**
BRAKES DO NOT RELEASE	Check for damaged or binding pedal linkage, a restricted by-pass port in the master cylinder, inoperative check valve, swollen master cylinder piston cups, or sticking brake cylinder pistons caused by dirty or contaminated brake fluid. Check the condition of the brake fluid and replace it if it is dirty or contaminated. **Flush the entire hydraulic system with clean denatured**	**alcohol before adding new brake fluid.** If the trouble is in the master cylinder, remove and rebuild the cylinder. **If the car must be moved when the brakes are locked, open a brake cylinder bleeder screw for a moment to let out a few drops of brake fluid. This operation will release the brakes but will not correct the cause of the trouble.**

2 MASTER CYLINDER, HYDRAULIC LINE, AND BRAKE PEDAL REPAIR

MASTER CYLINDER REPLACEMENT

1. Disconnect the two wires from the stop light switch at the brake master cylinder (Fig. 2).

2. Disconnect the three brake lines from the master cylinder outlet fitting.

3. Remove the two master cylinder attaching nuts and lockwashers, then remove the master cylinder from the booster unit.

4. Remove the rubber seal from the groove in the master cylinder (Fig. 5).

5. Transfer the stop light switch and the outlet fitting to the replacement master cylinder.

6. Install the rubber seal in the groove of the master cylinder housing (Fig. 5), and install the master cylinder over the push rod onto the two studs that are integral with the booster body. Install the lockwashers and retaining nuts. Torque to specification.

7. Connect the three brake lines to the outlet fitting, but leave the line fitting nuts loose (Fig. 1).

8. Fill the master cylinder to ⅜

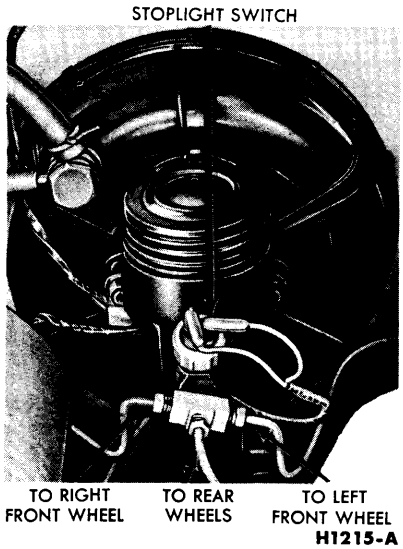

FIG. 2—Brake Master Cylinder Installed

inch below the top, and apply pressure to the brake pedal several times to expel air at the brake line fitting. Tighten the line fitting nuts.

9. Install the filler cap, wipe off excess fluid, and connect the two wires to the stop light switch.

MASTER CYLINDER OVERHAUL

DISASSEMBLY

1. Clean the outside of the cylinder, and remove the filler cap and gasket. Pour out any brake fluid that may remain in the cylinder or reservoir.

2. Remove the stop light switch, and the fitting from the forward end of the cylinder (Fig. 3).

3. Remove the snap ring from the bore at the rear of the cylinder.

4. Remove the piston, cup, spring, valve, and seat from the cylinder bore.

INSPECTION AND REPAIR

1. Clean all master cylinder parts in clean denatured alcohol, and inspect the parts for wear or damage, replacing them as required. **When using a master cylinder repair kit, install all of the parts supplied.**

2. Check the ports and vents in the master cylinder to make sure that all are open and free of foreign matter.

3. If the spring valve (riveted to the front end of the piston) is loose or has moved so that the piston ports are open, replace the piston.

4. Inspect the cylinder walls for scores or rust, and recondition them if necessary. **Hone the cylinder walls no more than necessary (0.003 inch maximum). Oversize pistons and cups are not available for excessively honed cylinders.**

5. Remove any burrs or loose metal that may have resulted from the honing operation, and clean the cylinder with denatured alcohol.

ASSEMBLY

1. Dip all parts except the master cylinder body in clean **heavy-duty** brake fluid.

2. Install the brake fitting and new gaskets (Fig. 3) on the forward end of the cylinder.

3. Install the stop light switch on the cylinder and tighten it securely.

4. Install the valve seat, valve, spring, cup, piston, push rod bumper, and stop plate in the cylinder bore.

5. Install the snap ring in the rear end of the bore.

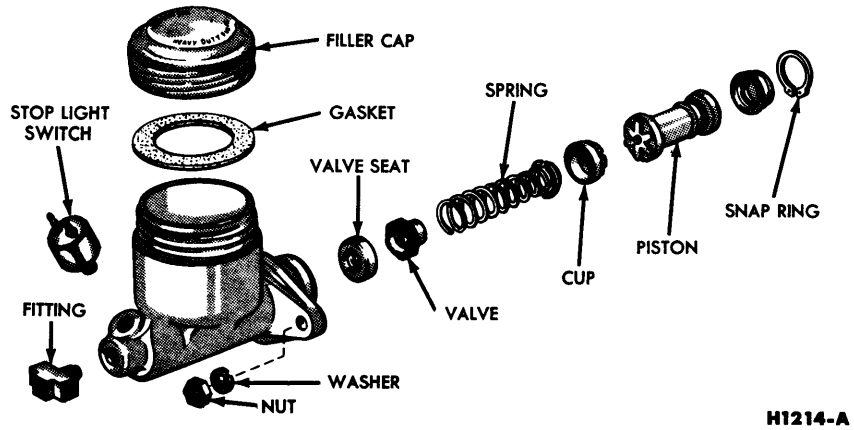

FIG. 3—Brake Master Cylinder Disassembled

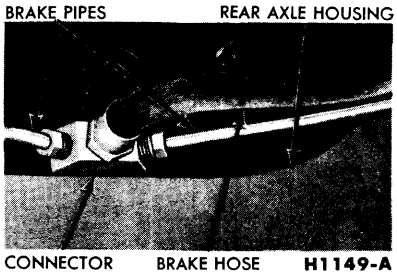

FIG. 4—Rear Brake Pipe Connector

HYDRAULIC LINE REPLACEMENT

Hydraulic lines of steel run from the pipe fitting at the master cylinder (Fig. 2) to the front and rear brake hoses and from the rear brake pipe connector (Fig. 4) to the rear brake cylinders. Flexible hoses connect the brake pipes to the front brake cylinders and to the rear brake pipe connector.

BRAKE PIPE REPLACEMENT

If a section of the brake pipe becomes damaged, the entire section should be replaced with pipe of the same type, size, shape, and length. **Copper tubing should not be used in a hydraulic system.** When bending brake pipe to fit body side rail or rear axle contours, be careful not to kink or crack the pipe.

All brake pipe should be flared properly to provide good leak-proof connections. Clean the brake pipe, by flushing with clean denatured alcohol, before installation.

When connecting a pipe to a front hose, to the rear hose, to the rear brake pipe connector or to a rear brake cylinder, tighten the pipe fitting nut to specified torque with tool 1112-144.

BRAKE HOSE REPLACEMENT

A flexible brake hose should be replaced if it shows signs of softening, cracking, or other damage.

When installing a new front brake hose, position the hose to avoid contact with other chassis parts. Place a new copper gasket over the hose fitting and screw the hose assembly into the front brake cylinder. Engage the opposite end of the hose to the bracket on the frame, install the horseshoe-type retaining clip, and connect the pipe to the hose with the pipe fitting nut.

A rear brake hose should be installed so that it does not touch the muffler outlet pipe or shock absorber.

Place a new gasket over the rear hose fitting and screw the hose assembly into the rear brake pipe connector Engage the front end of the hose to the bracket on the frame, install the horseshoe-type retaining clip, and connect the pipe to the hose with the pipe fitting nut.

BRAKE PEDAL REPLACEMENT

1. Remove the C-washer that retains the push rod link to the brake pedal assembly (Fig. 5).

2. Remove the retainer and spring washer from the left end of the brake pedal pivot pin, slide the pivot pin out of the brake pedal and bracket, and remove the pedal.

3. Install the pivot pin bushings on the replacement pedal assembly, lift the pedal assembly into position in the mounting bracket, and slide the pivot pin through the pedal and bracket from the right side.

4. Install the spring washer and secure the pivot pin in place by installing the retainer in the groove at the left end of the pin (Fig. 5).

5. Connect the push rod link to the pedal assembly and secure with the C-washer.

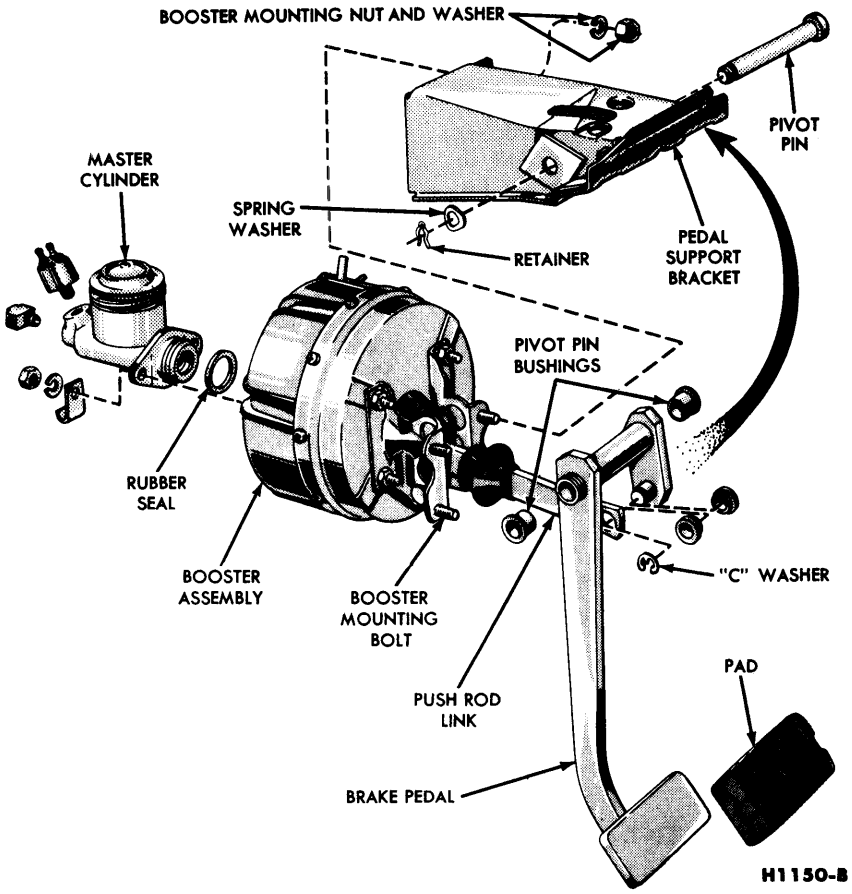

FIG. 5—Brake Pedal and Related Parts

3 BRAKE DRUM AND BRAKE ASSEMBLY REPAIR

FRONT BRAKE DRUM REMOVAL AND INSTALLATION

REMOVAL

1. Raise the car so that the wheel is clear of the floor.

2. Remove the hub cap, wheel, and bearing dust cap. Remove the cotter pin, nut, and washer.

3. Pull the brake drum approximately two inches forward and push back into position. Remove the wheel bearing and withdraw the brake drum.

If the brake drum will not come off, insert a narrow screwdriver through the brake adjusting hole in the carrier plate, and disengage the adjusting lever from the adjusting screw. While thus holding the adjusting lever away from the adjusting screw, back off the adjusting screw with the brake adjusting tool (Fig. 6). **Back off the adjustment only if the drum cannot be removed. Be very careful not to burr, chip, or damage the notches in the adjusting screw; otherwise, the self adjusting mechanism will not function properly.**

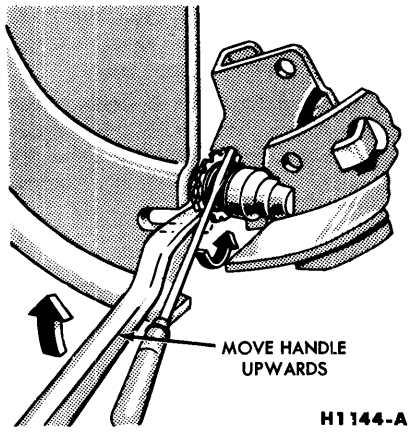

FIG. 6—Backing Off Brake Adjustment

INSTALLATION

1. Remove the protective coating from a new drum with carburetor degreaser.

2. Make sure that the grease in the hub is clean and adequate.

3. Place the brake drum over the spindle and into position. With the smaller diameter of the wheel bearing pointed inward, place the bearing over the spindle and push into position, followed by the washer and retaining nut.

4. Adjust the wheel bearings as outlined in Part 8-1, Section 2.

5. Install the grease cap, wheel, and hub cap.

6. Adjust the brake as outlined in this section.

REAR BRAKE DRUM REMOVAL AND INSTALLATION

REMOVAL

1. Raise the car so that the wheel is clear of the floor.

2. Remove the hub cap and wheel. Remove the three Tinnerman nuts and remove the brake drum.

If the brake drum will not come off, insert a narrow screwdriver through the brake adjusting hole in the carrier plate, and disengage the adjusting lever from the adjusting screw. While thus holding the adjusting lever away from the adjusting screw, back off the adjusting screw with the brake adjusting tool (Fig. 6). **Back off the adjustment only if the drum cannot be removed. Be very careful not to burr, chip, or damage the notches in the adjusting screw; otherwise, the self adjusting mechanism will not function properly.**

INSTALLATION

1. Remove the protective coating from a new drum with carburetor degreaser.

2. Place the drum over the brake assembly and into position. Install the three Tinnerman nuts and tighten securely.

3. Install the wheel.

BRAKE DRUM REFINISHING

Minor scores on a brake drum can be removed with a fine emery cloth. A drum that is excessively scored or shows a total indicator runout of over 0.007 inch should be turned down. Remove only enough stock to eliminate the scores and true up the drum. The refinished diameter must not exceed 0.030 inch oversize (11.060 inches).

If the drum diameter is less than 0.015 inch oversize (11.045 inches) after refinishing, standard lining may be installed. If the drum diameter is 11.045-11.060 inches, shimmed linings or oversize linings must be installed.

After a drum is turned down, wipe the refinished surface with a cloth soaked in clean denatured alcohol. If one drum is turned down, the opposite drum on the same axle should also be cut down to the same size.

BRAKE SHOE AND ADJUSTING SCREW REMOVAL AND INSTALLATION

REMOVAL

1. With the wheel and drum removed, install a clamp over the ends of the brake cylinder as shown in Fig. 7.

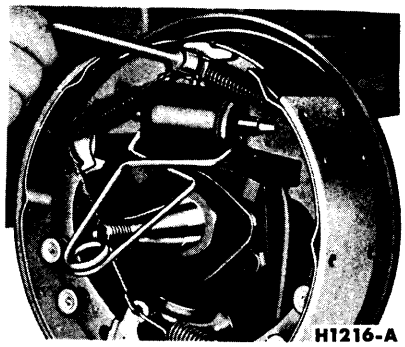

FIG. 7—Retracting Spring Removal

2. Contract the shoes as follows:

a. Disengage the adjusting lever from the adjusting screw by pulling backward on the adjusting lever (Fig. 1).

b. Move the outboard side of the adjusting screw upward and back off the pivot nut as far as it will go.

3. Pull the adjusting lever, cable and automatic adjuster spring down and toward the rear to unhook the pivot hook from the large hole in the secondary shoe web. **Do not attempt to pry the pivot hook out of the hole.**

4. Remove the automatic adjuster spring and adjusting lever (Fig. 1).

5. Remove the secondary shoe to anchor spring with the tool shown in Fig. 7. With the same tool, remove the primary shoe to anchor spring and unhook the cable anchor.

6. Remove the anchor pin plate, then remove the tension spring.

7. Remove the cable guide from the secondary shoe (Fig. 1).

8. Remove the shoe hold-down springs, shoes, adjusting screw, pivot nut and socket.

9. On rear brakes, remove the parking brake link and spring. Disconnect the parking brake cable from the parking brake lever.

10. After removing the rear brake primary shoe, disassemble the parking brake lever from the shoe by removing the retaining clip and spring washer (Fig. 1).

CLEANING AND INSPECTION

1. Wash all the parts except the brake shoes in a cleaning fluid and dry with compressed air.

2. Brush all dust from the carrier plates and interior of the brake drums.

3. Inspect the brake shoes for excessive lining wear or shoe damage. If the lining is worn to within 1/32 inch of the rivet heads or if the shoes are damaged, they must be replaced. Replace any lining that has been oil saturated. Replace lining in axle sets. Prior to replacement of lining, the drum diameter should be checked to determine if oversize or shimmed linings must be installed.

4. Inspect all other brake parts and replace any that are worn or damaged.

5. Inspect the brake drums and, if necessary, refinish as outlined in this section.

INSTALLATION

1. Before installing the rear brake shoes, assemble the parking brake lever to the secondary shoe and secure with the spring washer and retaining clip.

2. Apply a light coating of high-temperature grease at the points where the brake shoes contact the carrier plate.

3. Position the brake shoes on the carrier plate, and install the hold-down spring pins, springs, and cups. On the rear brake, install the parking brake link and spring. Connect the parking brake cable to the parking brake lever (Fig. 1).

4. Install the tension spring on the anchor pin with the concave side of the spring toward the shoes. Install the anchor pin plate on the anchor pin against the tension spring. Place the cable anchor over the anchor pin with the crimped side toward the carrier plate.

5. Install the primary shoe to anchor spring with the tool shown in Fig. 8.

6. Install the cable guide on the secondary shoe web with the flanged hole fitted into the hole in the secondary shoe web. Thread the

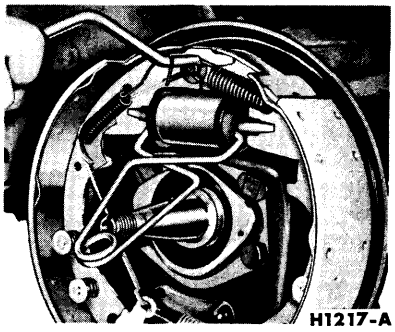

FIG. 8—Retracting Spring Installation

cable around the cable guide groove (Fig. 1).

It is imperative that the cable be positioned in this groove and not between the guide and the shoe web.

7. Install the secondary shoe to anchor spring (Fig. 8).

Be certain that the cable end is not cocked or binding on the anchor pin when installed. All parts should be flat on the anchor pin. Remove the brake cylinder clamp.

8. Apply high-temperature grease to the threads and the socket end of the adjusting screw. Turn the adjusting screw into the adjusting pivot nut to the limit of the threads and then back off ½ turn.

Interchanging the brake shoe adjusting screw assemblies from one side of the car to the other would cause the brake shoes to retract rather than expand each time the automatic adjusting mechanism operated. To prevent installation on the wrong side of the car, the socket end of the adjusting screw is stamped with an R or L (Fig. 9). The adjusting pivot nuts can be distinguished by the number of lines machined around the body of the nut. Two lines indicate a right hand nut; one line indicates a left hand nut.

9. Place the adjusting socket on the screw and install this assembly between the shoe ends with the adjusting screw nearest the secondary shoe.

10. Hook the cable hook into the hole in the adjusting lever The adjusting levers are stamped with an R or L to indicate their installation on a right or left hand brake assembly (Fig. 9).

11. Position the hooked end of the adjuster spring into the large hole in the primary shoe web, and connect the loop end of the spring to the adjuster lever hole.

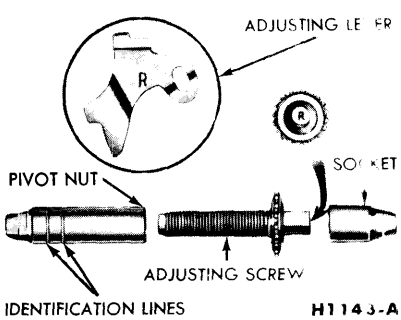

FIG. 9—Adjusting Screws and Lever Identification

12. Pull the adjuster lever, cable and automatic adjuster spring down and toward the rear to engage the pivot hook in the large hole in the secondary shoe web (Fig. 1).

13. After installation, check the action of the adjuster by pulling the section of the cable between the cable guide and the adjusting lever toward the secondary shoe web far enough to lift the lever past a tooth on the adjusting screw wheel. The lever should snap into position behind the next tooth, and release of the cable should cause the adjuster spring to return the lever to its original position. This return action of the lever will turn the adjusting screw one tooth.

If pulling the cable does not produce the action described, or if the lever action is sluggish instead of positive and sharp, check the position of the lever on the adjusting screw-toothed wheel. With the brake in a vertical position (anchor at the top), the lever should contact the adjusting wheel 3/16 inch (plus or minus 1/32 inch) above the centerline of the screw. If the contact point is below this centerline, the lever will not lock on the teeth in the adjusting screw wheel, and the screw will not be turned as the lever is actuated by the cable.

To determine the cause of this condition:

a. Check the cable end fittings. The cable should completely fill or extend slightly beyond the crimped section of the fittings. If it does not meet this specification, possible damage is indicated and the cable assembly should be replaced.

b. Check the cable length. The cable should measure 11⅛ inches (plus or minus 1/64 inch) from the end of the cable anchor to the end of the cable hook.

c. Check the cable guide for damage. The cable groove should be parallel to the shoe web, and the body of the guide should lie flat against the web. Replace the guide if it shows damage.

d. Check the pivot hook on the lever. The hook surfaces should be square with the body of the lever for proper pivoting. Repair the hook or replace the lever if the hook shows damage.

e. See that the adjusting screw socket is properly seated in the notch in the shoe web.

ADJUSTMENT

The hydraulic service brakes are self-adjusting and require a manual adjustment only after the brake shoes have been relined, replaced, or when the length of the adjusting screw has been changed while performing some other service operation.

1. After the shoes have been installed or the adjusting screw has been turned, install the drum. Be sure that all excess grease, oil, and other foreign material are wiped off the carrier plate and drum.

Before installing the brake drum on the front wheel spindle, wipe the spindle completely free of grease. Install the drum carefully so that the grease seal retainers within the hub will not be damaged.

2. Remove the adjusting hole cover from the carrier plate and, from the carrier plate side, turn the adjusting screw upward to expand the shoes (Fig. 10). Expand the shoes until a slight drag is felt when the drum is rotated.

3. Remove the drum. While holding the adjusting lever out of engagement with the adjusting screw, back off the adjusting screw ¾ of a turn with the fingers. If finger movement will not turn the screw, free it up; otherwise, the self adjusting lever will not turn the screw. Lubricate the screw with oil and coat with wheel bearing grease.

Any other adjustment procedure may cause damage to the adjusting screw with consequent self adjuster problems.

4. Apply a small quantity of high-

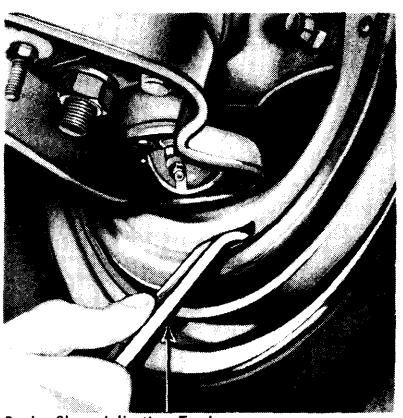

FIG. 10—Expanding Brake Shoes

temperature grease to the points where the shoes contact the carrier plate, being careful not to get the lubricant on the linings. Install the wheel and drum.

5. Install the adjusting hole cover on the brake carrier plate.

6. When adjusting the rear brake shoes, check the parking brake cables for proper adjustment. Make sure that the equalizer lever operates freely.

7. After the brake shoes have been properly adjusted, check the operation of the brakes.

BRAKE SHOE RELINING

Brake linings that are worn to within 1/32 inch of the rivet or have been saturated with grease or oil should be replaced. Failure to replace worn linings will result in a scored drum. **When it is necessary to replace linings, they must also be replaced on the wheel on the opposite side of the car.**

Inspect brake shoes for distortion, cracks, or looseness. If this condition exists, the shoe should be discarded. **Do not repair a defective brake shoe.**

1. Wash the brake shoes thoroughly in a clean solvent. Remove all burrs or rough spots from the shoes.

2. Check the inside diameter of the brake drum. If the drum is less than 11.045 inches, standard lining may be installed. If the diameter is 11.045-11.60 inches, oversized or shimmed lining should be installed.

3. Position the new lining on the shoe. Starting in the center, insert and secure the rivets, working alternately towards each end. Install all parts supplied in the kit. **Ford replacement linings are ground and no further grinding is required when the original drum diameter is maintained.**

4. Check the clearance between the shoe and lining. The lining must seat tightly against the shoe with not more than 0.005-inch clearance between any two rivets.

BRAKE CYLINDER REPLACEMENT

REMOVAL

1. With the wheel in a raised position, remove the wheel and the drum.

2. Place a clamp over the ends of the brake cylinder as shown in Fig. 7.

3. Remove the brake shoe assemblies, following procedures outlined in this section.

4. Disconnect the brake line from the brake cylinder. To disconnect the hose at a front cylinder, loosen the pipe fitting that connects the opposite end of the hose to the brake tube at a bracket on the frame. Remove the horseshoe-type retaining clip from the hose and bracket, disengage the hose from the bracket, then unscrew the entire hose assembly from the front brake cylinder.

At a rear cylinder, unscrew the pipe fitting that connects the tube to the cylinder. **Be sure the engine is stopped and there is no vacuum in the booster system before disconnecting the hydraulic lines.**

5. Remove the brake cylinder retaining bolts and lock washers and remove the cylinder. Remove the clamp from the cylinder.

INSTALLATION

1. Insert the cylinder into the opening on the carrier plate and install the retaining bolts and lockwashers. Install a front wheel cylinder with the inlet toward the rear of the car.

2. On a front cylinder, install a new copper gasket over the hose fitting. Screw the hose assembly into the cylinder. Engage the opposite end of the hose to the bracket on the frame, install the horseshoe-type retaining clip, and connect the brake tube to the hose with the pipe fitting nut. Tighten the nut to specification with tool 1112-144.

On a rear cylinder, connect the tube to the cylinder by tightening the pipe fitting nut to the cylinder. Tighten the nut to specification with tool 1112-144.

3. Install the links in the ends of the brake cylinder, install the shoe and adjuster assemblies and adjust the shoes as outlined in this section.

4. Install the brake drum and wheel and bleed the brakes as outlined in this section.

BRAKE CYLINDER OVERHAUL

It is not necessary to remove the brake cylinder from the carrier plate to disassemble, inspect, or hone and overhaul. Removal is necessary only when the cylinder is damaged or scored beyond repair.

DISASSEMBLY

1. Remove the links and the rubber boots from the ends of the brake cylinder. Remove the pistons, cups, and return spring from the cylinder bore (Fig. 11).

2. Remove the bleeder screw from the cylinder.

INSPECTION

1. Wash all parts in clean denatured alcohol and dry with compressed air.

2. Check all internal parts for ex-

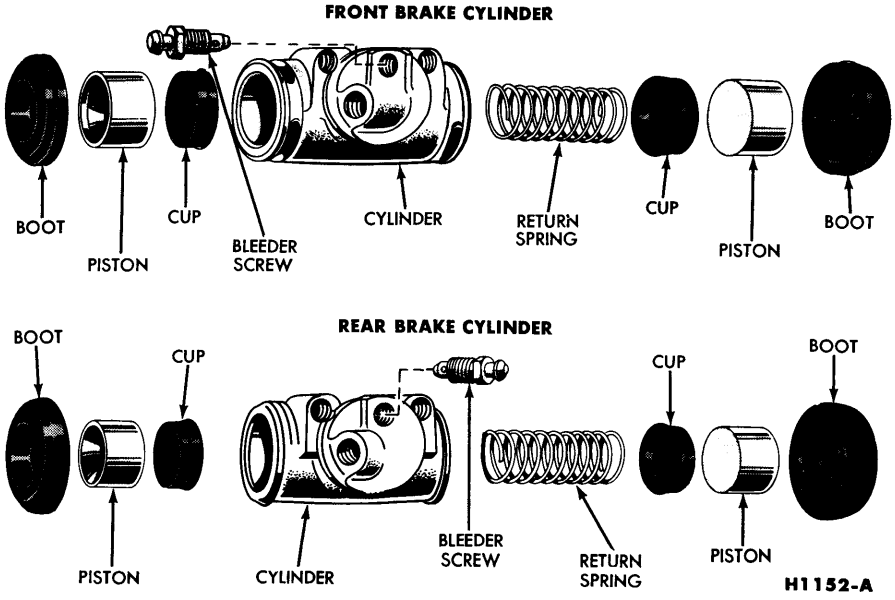

FIG. 11—Front and Rear Brake Cylinders

cessive wear or damage. **If any of the internal parts require replacing, all should be replaced.**

3. Inspect the cylinder bore for score marks or rust. If either condition is present, the cylinder bore must be honed. **However, the cylinder should not be honed more than 0.003 inch beyond its original diameter.**

4. Check the bleeder hole to be sure that it is open.

ASSEMBLY

1. Apply a coating of heavy-duty brake fluid to all internal parts.

2. Thread the bleeder screw into the cylinder and tighten securely

3. Insert the return spring, cups, and pistons into their respective positions in the cylinder bore (Fig. 11). Place a boot over each end of the cylinder.

BRAKE CARRIER PLATE REPLACEMENT

REMOVAL

1. Remove the wheel and brake drum. Disconnect the brake line from the brake cylinder.

2. Remove the brake shoe and adjuster assemblies and the brake cylinder as outlined in this section. On the rear wheels, disconnect the parking brake lever from the cable.

3. If the rear carrier plate is being replaced, rotate the axle shaft so that the hole in the axle shaft flange lines up with the carrier plate retaining nuts and remove the nuts. Pull the axle shaft assembly out of the housing with tool 4235N and a slide hammer (Part 6-1, Fig. 3), then remove the carrier plate.

If the front carrier plate is being replaced, remove the bolts and nuts that secure the plate to the front wheel spindle and remove the plate.

INSTALLATION

1. Position a new **rear** carrier plate on the retaining bolts in the axle housing flange. Insert the axle shaft into the housing so that the splines engage the differential side gear with the bearing retainer sliding onto the retaining bolts and against the carrier plate. Install the retaining nuts through the access hole in the axle shaft flange.

Position a new **front** carrier plate to the wheel spindle and install the retaining bolts and nuts.

2. Install the brake shoe and adjuster assemblies and the brake cylinder as outlined in this section. On a **rear** brake connect the parking brake cable to the lever.

3. Connect the brake line to the brake wheel cylinder, then install the wheel and brake drum.

4. Adjust the brake shoes and bleed the brake system as outlined in this section.

HYDRAULIC SYSTEM BLEEDING

When any part of the hydraulic system has been disconnected for repair or replacement, air may get into the lines and cause spongy pedal action. Bleed the hydraulic system after it has been properly connected to be sure that all air is expelled from the brake cylinders and lines.

The hydraulic system can be bled manually or with pressure bleeding equipment.

MANUAL BLEEDING

Bleed the longest lines first. Keep the master cylinder reservoir filled with new heavy-duty brake fluid during the bleeding operation.

Never use brake fluid which has been drained from the hydraulic system.

1. Attach a rubber drain tube to the bleeder screw at the brake cylinder that is located the farthest from the master cylinder. **The end of the tube should fit snugly around the bleeder screw.**

2. Submerge the free end of the tube in a container partially filled with clean brake fluid, and loosen the bleeder screw.

3. Push the brake pedal down slowly by hand, allowing it to return slowly to the fully-released position. Repeat this operation until air bubbles cease to appear at the submerged end of the tube.

4. When the fluid is completely free of air bubbles, close the bleeder screw and remove the drain tube.

5. Repeat this procedure at each brake cylinder. Refill the master cylinder reservoir after each brake cylinder is bled.

PRESSURE BLEEDING

Bleed the longest lines first. **Never use brake fluid which has been drained from the hydraulic system.**

Be sure that there is enough new heavy-duty brake fluid in the bleeder tank to complete the bleeding operation, and that the tank is charged with 10-30 pounds of air pressure.

1. Clean all dirt from the master cylinder reservoir cap, remove the cap, and install an adapter cap. Attach the bleeder tank hose to the fitting on the adapter cap.

Adapter cap 2162 can be used, or an adapter cap can be fabricated by cutting a hole in the center of a reservoir cap and soldering a fitting at the hole.

2. Attach a rubber drain tube to the bleeder screw at the brake cylinder that is located farthest from the master cylinder. **The end of the tube should fit snugly around the bleeder screw.**

3. Submerge the free end of the tube in a container partially filled with clean brake fluid, and loosen the bleeder screw.

4. Open the valve on the bleeder tank to admit pressurized brake fluid to the master cylinder reservoir.

5. When air bubbles cease to appear in the fluid at the submerged end of the drain tube, close the bleeder screw and remove the tube.

6. Repeat this procedure at each brake cylinder.

7. When the bleeding operation is completed, close the bleeder tank valve and remove the tank hose from the filler hole. Refill the master cylinder reservoir to within ⅜ inch of the top of the filler neck.

4 PARKING BRAKE REPAIR

PARKING BRAKE PEDAL ASSEMBLY

REMOVAL

1. Remove the set screw that retains the release cable to the pedal assembly.

2. Remove the three bolts that retain the parking brake pedal to the dash side panel.

3. Press the parking brake pedal assembly down and remove the lock clip spring, clevis pin, and the "U" shaped clevis from the pedal assembly.

4. Remove the horseshoe-type clip that retains the parking brake cable housing to the assembly, and remove the assembly.

INSTALLATION

1. Insert the parking brake cable and housing through the hole in the pedal assembly and install the retaining clip.

2. Install the "U" shaped clevis over the parking brake ball and position on the actuating lever. Insert the clevis pin and install the spring clip.

3. Position the parking brake pedal assembly against the dash side panel and install the three retaining bolts.

4. Install the parking brake release cable and adjust for proper operation.

PARKING BRAKE EQUALIZER TO PEDAL CABLE

REMOVAL

1. Move the equalizer lever forward far enough to permit removing the adjusting nut from the end of the cable (Fig. 12).

2. Remove the clip that holds the cable to the frame.

3. Remove the cable retaining clamp.

4. Working inside the car, remove the spring clip and clevis pin from the "U" shaped clevis and remove the clevis from the actuating lever.

5. Remove the horseshoe shaped clip that retains the housing to the pedal assembly. Rotate and remove the "U" shaped clevis and remove the cable and housing from the pedal assembly.

6. Push the cable and housing down through the hole in the floor pan and remove it from under the car.

INSTALLATION

1. From the underside of the car, guide the upper end of the replacement cable into the hole in the floor pan.

2. From the inside, pull the new cable and housing up through the hole in the floor pan.

3. Insert the upper end of the cable into the pedal assembly and install the spring clip.

4. Install the "U" shaped clevis over the ball on the cable and attach the clevis to the actuating arm by inserting the clevis pin and spring clip.

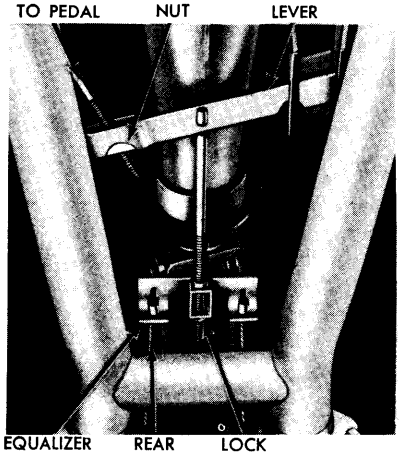

FIG. 12—Parking Brake Linkage

5. Working underneath the car, install the cable retaining clamp and clip that holds the cable to the frame.

6. Insert the cable through the hole in the equalizer lever and install the adjusting nut (Fig. 12).

7. Check the operation of the parking brake and, if necessary, adjust.

PARKING BRAKE EQUALIZER TO REAR WHEEL CABLE

REMOVAL

1. Raise the car and remove the hub cap and wheel.

2. Remove the three Tinnerman nuts that hold the brake drum in place, and remove the drum.

3. Loosen the equalizer rod adjusting nut and disconnect the cable from the equalizer (Fig. 12).

4. Remove the horseshoe-type clip that retains the cable housing to the frame bracket and pull the cable and housing out of the bracket.

5. Working on the wheel side (Fig. 1), compress the prongs on the cable retainer so that they can pass through the hole in the carrier plate. Draw the cable retainer out of the hole.

6. With the spring tension off the parking brake lever, lift the cable out of the slot in the lever and remove through the carrier plate hole.

INSTALLATION

1. Pull enough of the cable through the housing so that the end of the cable may be inserted over the slot in the parking brake lever.

2. Pulling the excess slack from the cable, insert the cable housing into the carrier plate access hole so that the retainer prongs expand.

3. Thread the front end of the cable through the frame bracket and install the horseshoe-type retaining clip.

4. Insert the ball end of the cable into the equalizer and tighten the adjusting nut slightly.

5. Install the rear drum. Tighten the three Tinnerman nuts that retain the drum, and install the wheel and hub cap.

6. Tighten the equalizer rod adjusting nut to take the slack out of the parking brake cables, and rotate both rear wheels to make sure that the brakes are not dragging.

PARKING BRAKE LINKAGE ADJUSTMENT

In most cases, a rear brake shoe adjustment will provide satisfactory parking brake action.

Check the parking brake cables when the brakes are fully released. If the cables are loose, adjust them as follows:

1. Loosen the locknut on the equalizer rod, and then turn the nut in front of the equalizer several turns forward (Fig. 12).

2. Turn the locknut forward against the equalizer until the cables are just tight enough to remove the slack. **Excessive tightening may pull the brake shoes off their anchors.**

3. When the cables are properly adjusted, tighten both nuts against the equalizer.

4. Check the cable between the equalizer lever and the parking brake control pedal. If the cable is loose, turn the equalizer lever nut forward far enough to remove the slack in the cable without moving the equalizer lever.

PART 8-5 POWER BRAKES

Section		Page
1	Operation	8-25
2	Trouble Shooting	8-26
3	Power Brake Repair	8-27

The power brake booster is installed on the engine side of the dash panel and is connected to the brake pedal through a lever assembly and push rod link.

OPERATION

The booster consists of a vacuum chamber, atmospheric valve, control valve plunger assembly, diaphragm and an atmospheric chamber (Figs. 1, 2 and 3).

Atmospheric pressure is present at all times in the atmospheric chamber at the front side of the atmospheric valve. The air intake to the atmospheric chamber is protected by an air filter. The atmospheric chamber is separated from the vacuum chamber by the bellows assembly within the vacuum chamber.

Vacuum is present at all times in that area of the vacuum chamber forward of the diaphragm. Vacuum is supplied through a hose from the intake manifold to the vacuum manifold and check valve on the booster body. With this integral check valve and vacuum chamber, it is possible to obtain several power assisted brake applications with the engine shut off. This arrangement makes a vacuum reservoir unnecessary.

Either vacuum from the forward side of the diaphragm or air from the bellows (atmospheric chamber) can be connected to the rear side of the diaphragm through porting in the control valve hub and the plunger assembly.

APPLYING POSITION

As the brake pedal is depressed, the valve operating rod and valve plunger assembly move forward compressing the plunger return spring (Fig. 1). The initial movement of the plunger closes the porting from the vacuum chamber preventing further evacuation of the area back of the diaphragm. Further movement of the plunger forces the atmospheric valve off its seat so that atmospheric pressure from the bellows can enter the hub porting that leads to the rear side of the diaphragm.

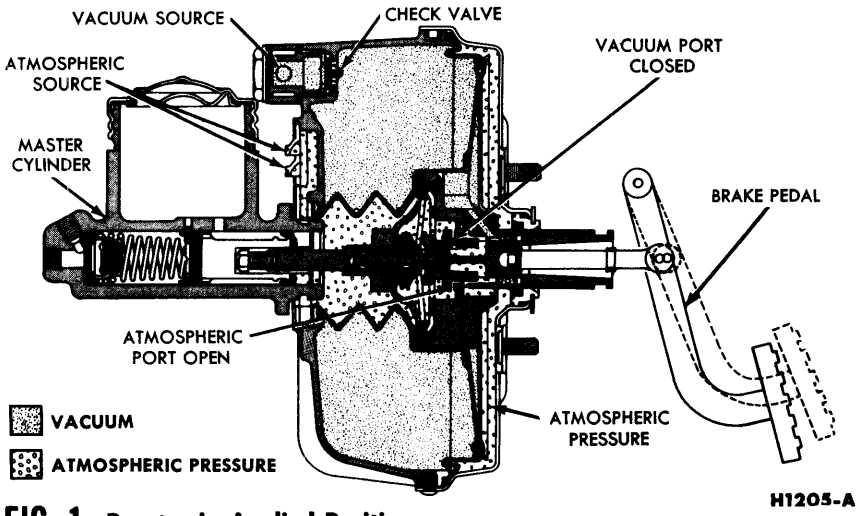

FIG. 1—Booster in Applied Position

With vacuum on the front side of the diaphragm and atmospheric pressure on the back side of the diaphragm, a force is developed to move the diaphragm, push rod and master cylinder piston forward to close the compensating port and force hydraulic fluid under pressure through the residual pressure check valve and brake tubes to the wheel brakes. As hydraulic pressure is developed in the hydraulic system, a reaction counter-force acts against the reaction lever and ring assembly. This reaction lever and ring assembly is designed to transmit the reaction forces back through the actuat-

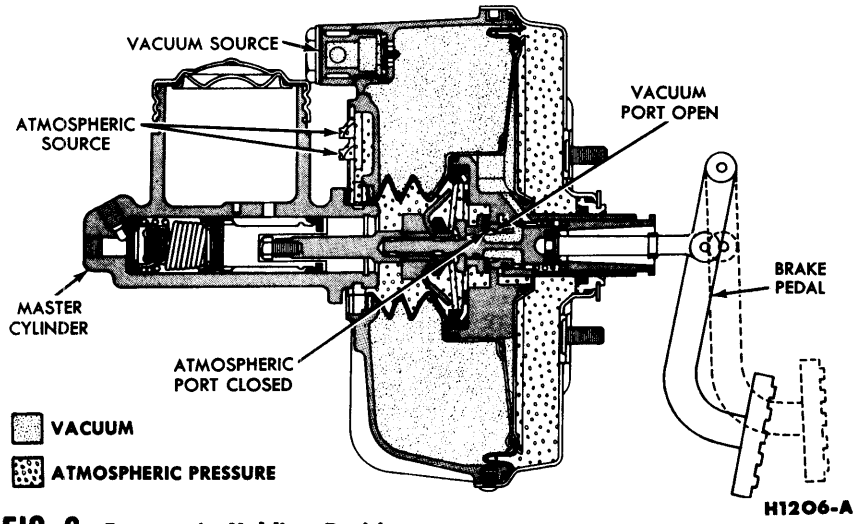

FIG. 2—Booster in Holding Position

ing control valve assembly to the brake pedal and provide the driver with a resistance that is in proportion to the brake hydraulic apply forces. This is the means of providing the proper "driver feel" to the power brake unit.

HOLDING POSITION

When the forward motion of the brake pedal is stopped and held, the valve operating rod ceases to move the control valve plunger forward. However, the unbalanced forces of atmospheric pressure and vacuum on each side of the diaphragm will continue to move the outer sleeve of the control valve plunger forward keeping the vacuum porting closed. At the same time, the reaction force acting through the reaction ring and lever assembly will tend to move the atmospheric valve to the closed position (Fig. 2). When these combined forces balance, the porting to the vacuum supply will remain closed and the atmospheric valve will cut off any further passage of atmospheric pressure to the area behind the diaphragm. Therefore, the power assist force acting on the master cylinder piston will stabilize and the hydraulic force applying the brakes will be maintained at a constant level.

RELEASED POSITION

When the pedal pressure is released from the valve operating rod and plunger assembly, the plunger return spring moves the plunger away from the atmospheric valve allowing the valve to seat against the hub (Fig. 3). This seating of the valve closes off the bellows chamber from the hub porting that connects to the rear side of the diaphragm. At the same time, the rearward movement of the plunger opens the porting from the vacuum chamber and draws out the air from the rear side of the power diaphragm. With vacuum on both sides of the diaphragm, the assist force against the master cylinder push rod is eliminated. The brake shoe retracting springs will, therefore, cause the hydraulic fluid to return the master cylinder piston, push rod control valve plunger assembly and the diaphragm to the released position.

With the piston and push rod in the released position the hydraulic compensating port in the master cylinder is open. The open port permits fluid either to return from the brake system to the fluid reservoir, or enter the brake system from the reservoir.

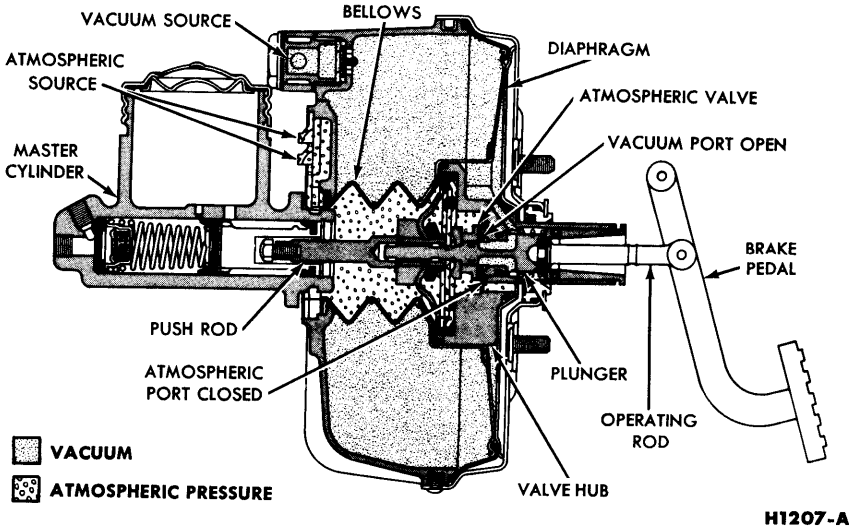

FIG. 3—Booster in Released Position

2 TROUBLE SHOOTING

PRELIMINARY CHECKS

With the engine stopped, apply the brakes several times to eliminate vacuum from the system. Make the preliminary and road test checks (Part 8-4, Section 1). The bleeding procedure is the same as for conventional brakes.

TROUBLE DIAGNOSIS GUIDE

HARD PEDAL	Check as follows to see if the power unit is operating: With the engine stopped, depress the brake pedal several times to eliminate all vacuum from the system. Apply the brakes, and while maintaining pressure on the pedal, start the engine. If the unit is operating, the brake pedal will move forward slightly when engine vacuum power is added to the foot pressure on the pedal. If the unit is not operating, there will be no pedal action. If this check shows that the unit is not operating check for the following:	Brake pedal linkage sticking. Faulty vacuum check valve. Collapsed or leaking vacuum hose. Plugged vacuum fittings. Leaking vacuum chamber. Vacuum check valve stuck in closed position. Leak in bellows assembly. Diaphragm assembly out of place in housing locating radii. Vacuum leak in automatic transmission T.V. vacuum line connection or fitting. Vacuum leak in forward, vacuum housing.

TROUBLE DIAGNOSIS GUIDE (Cont'd.)

BRAKES DRAG	Sticking valve plunger.
BRAKES GRAB	Sticking actuating valve assembly.
SELF APPLICATION OF BRAKES WHEN ENGINE STARTS	Leak in rear housing. Diaphragm out of locating radii in housings and allowing atmospheric pressure into rear chamber. Sticking or unseated atmospheric valve.

3 POWER BRAKE REPAIR

POWER UNIT REPLACEMENT

REMOVAL

1. Open the hood, and disconnect the wires from the stop light switch at the brake master cylinder (Fig. 4).

2. Disconnect the brake lines at the master cylinder outlet fitting.

3. Disconnect the manifold vacuum hose from the booster unit. Disconnect the transmission vacuum throttle valve from the booster.

4. Working inside the car below the instrument panel, disconnect the booster push rod link from the brake pedal assembly. To do this, remove the horseshoe-type retaining clip and slide the push rod link off the pin that is integral with the pedal (Part 8-4, Fig. 6).

5. Remove the four bracket-to-dash panel retaining nuts and washers.

6. Remove the booster and bracket assembly from the dash panel, sliding the push rod link out from the engine side of the dash panel (Fig. 4).

INSTALLATION

1. Mount the booster and bracket assembly to the dash panel by sliding the bracket mounting studs and the push rod link in through the holes in the dash panel (Fig. 4).

2. Working inside the car below the instrument panel, install the mounting bracket-to-dash panel retaining nuts and washers. Connect the booster push rod link to the brake pedal assembly. To do this, slide the push rod link onto the pin that is integral with the pedal. Secure the link to the pin with a horseshoe-type retaining clip (Part 8-4, Fig. 6).

3. Connect the manifold vacuum hose to the booster. Connect the transmission vacuum throttle valve hose, if so equipped.

4. Connect the brake line to the master cylinder outlet fitting, and connect the wires to the stoplight switch.

5. Bleed the brake system.

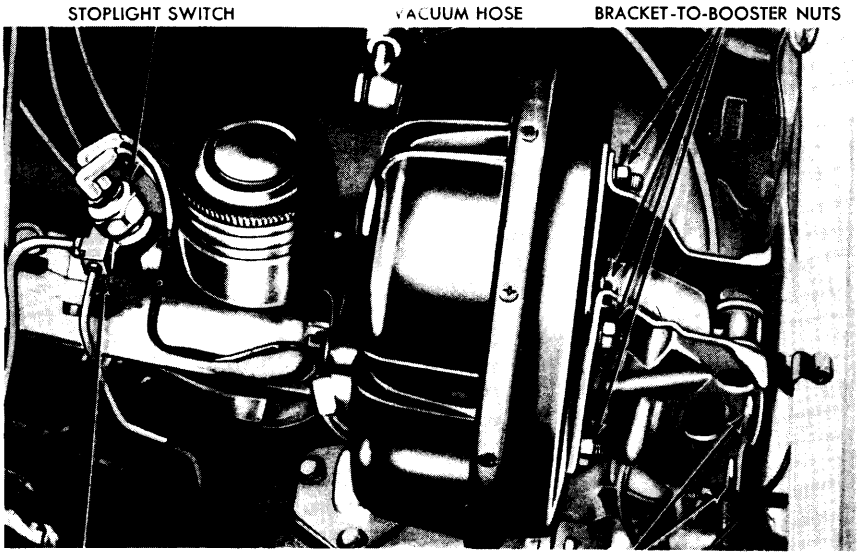

FIG. 4—Brake Booster Installation

DISASSEMBLY OF POWER UNIT

REMOVAL OF EXTERNAL PARTS

1. Remove the two attaching nuts and lockwashers, and separate the master cylinder from the booster body. For master cylinder overhaul, refer to Part 8-4, Section 2.

2. Remove the filter cover and hub and the air filter from the booster body (Fig. 10).

3. Remove the mounting bolt vacuum manifold, two gaskets and the vacuum check valve from the booster body (Fig. 10).

4. Disconnect the valve operating rod from the lever assembly by removing the retainer clip, washers and connecting pin (Fig. 10).

5. Disconnect the lever assembly from the end plate brackets by removing the retainer clip, washers and pivot pin.

6. Remove the retaining nuts, and disassemble the brackets from the end plate.

7. Remove the rubber boot from the valve operating rod.

SEPARATION OF MAJOR COMPONENTS

1. Remove the large C-ring that retains the rear seal adapter assembly to the booster end plate (Fig. 10).

2. Remove the booster body-to-end plate retaining screws, tap the outside of the end plate with a fibre hammer, and separate the end plate from the booster body.

3. Push the bellows assembly into the vacuum chamber (Fig. 5), and separate the bellows, control valve and diaphragm assembly from the booster body.

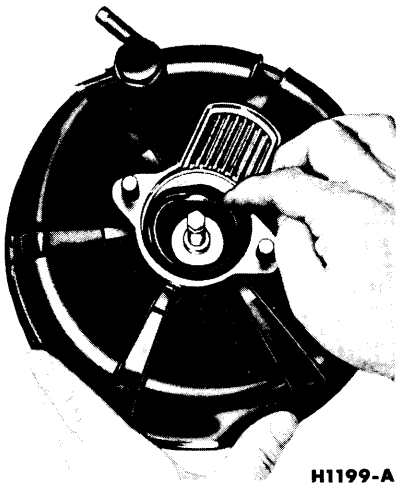

FIG. 5—Separation of Bellows, Control Valve, and Diaphragm Assembly From Booster Body

4. Remove the outer O-ring from the control valve hub (Fig. 10).

DISASSEMBLY OF BELLOWS, PUSH ROD AND VALVE ASSEMBLY FROM DIAPHRAGM

1. Remove the large bellows retaining ring, bellows, bellows retainer and support ring from the diaphragm and valve assembly (Fig. 6).

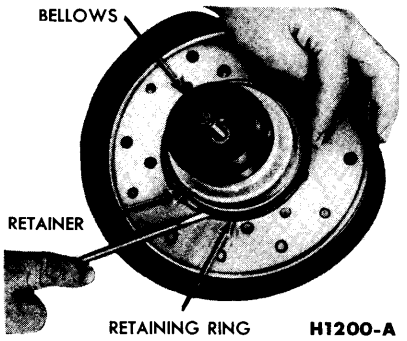

FIG. 6—Bellows Removal or Installation

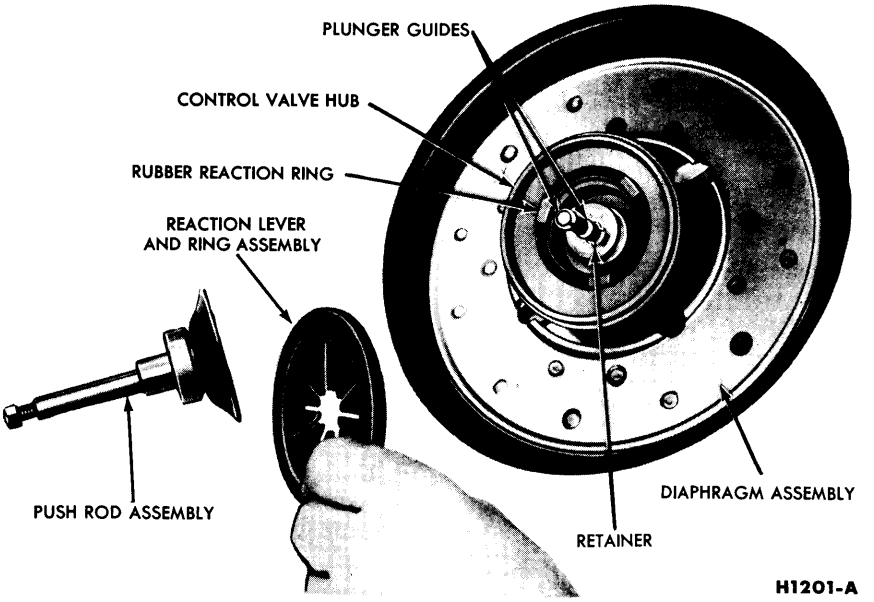

FIG. 7—Assembly of Reaction Components and Push Rod to Valve Hub

2. Remove the retainer and support ring from the bellows (Fig. 10).

3. Remove the push rod assembly, the reaction lever and ring assembly, and the rubber reaction ring from the control valve hub (Fig. 7).

4. Remove the reaction cone and cushion ring from the push rod assembly and disassemble the reaction levers from the ring (Figs. 7 and 10).

5. Remove the two plastic plunger guides from the control valve plunger, then remove the retainer that holds the reaction load ring and atmospheric valve to the control valve hub (Fig. 7).

6. Slide the reaction load ring and the atmospheric valve from the control valve hub (Figs. 7 and 8).

7. Separate the control valve hub and the control valve plunger assembly from the diaphragm by sliding the valve plunger and rear seal adapter from the rear of the valve hub (Fig. 8). Remove the hub outer O-ring from the front side of the diaphragm.

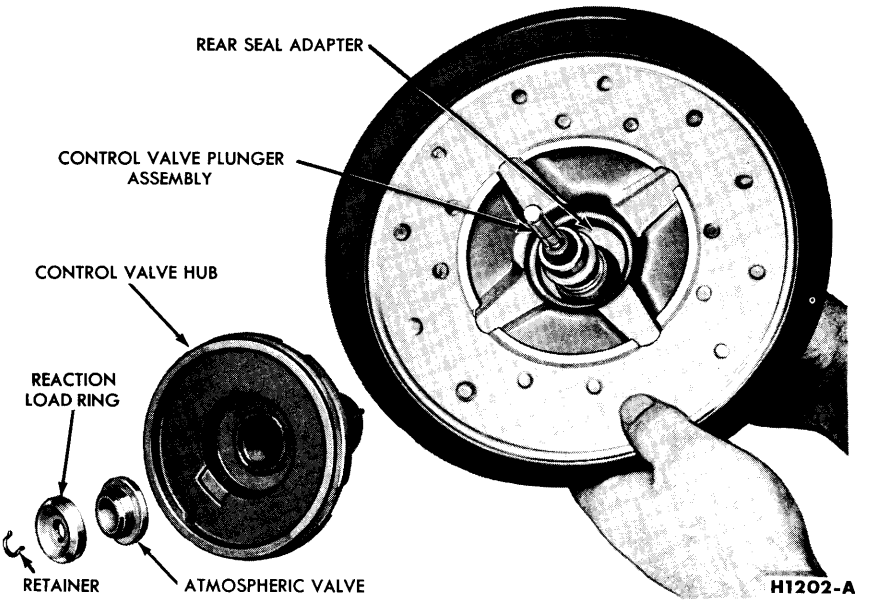

FIG. 8—Assembly of Control Valve Components to Diaphragm

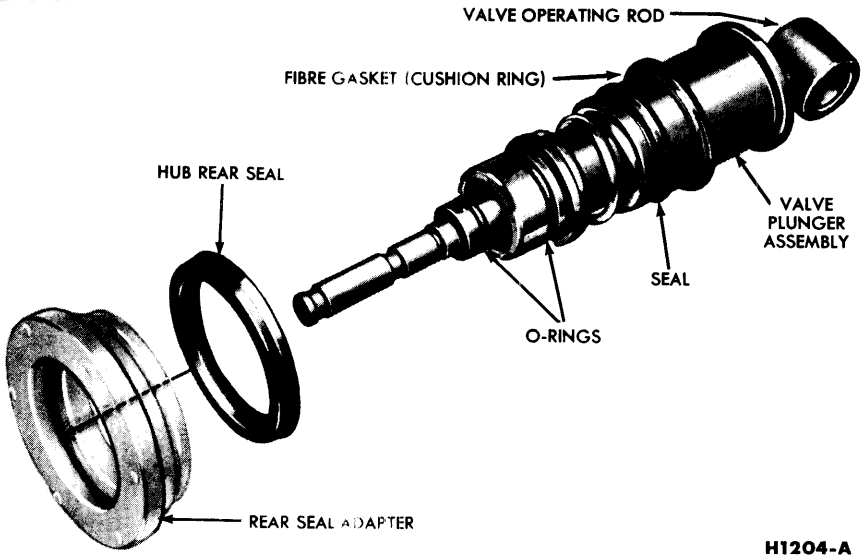

FIG. 9—Valve Operating Rod, Plunger and Rear Seal

DISASSEMBLY OF CONTROL VALVE PLUNGER

1. Remove the hub rear seal adapter from the valve plunger assembly, and remove the seal from the adapter (Fig. 9).

2. Remove the O-rings, the seal and the fibre gaskets from the valve plunger (Fig. 9).

3. Do not remove the valve operating rod from the control valve plunger unless the plunger assembly is to be replaced. To remove, hold the plunger firmly, and pull out the rod with pliers.

CLEANING AND INSPECTION

After disassembly, immerse all metal parts in a suitable solvent. Use only alcohol on rubber parts or parts containing rubber. After the parts have been thoroughly cleaned and rinsed in cleaning solvent, the metal parts which come in contact with hydraulic brake fluid should be rewashed in clean alcohol before assembly. Use an air hose to blow dirt and cleaning fluid from the recesses and internal passages. When overhauling a power booster, use all parts furnished in the repair kit. **Discard all old rubber parts.**

Inspect all other parts for damage or excessive wear. Replace damaged or excessively worn parts. If the inside of the booster body is rusted or corroded, polish it with steel wool or fine emery cloth. Replace the body shell when scored. Inspect the master cylinder bore for signs of scoring, rust, pitting or etching. Any of these conditions will require replacement of the cylinder.

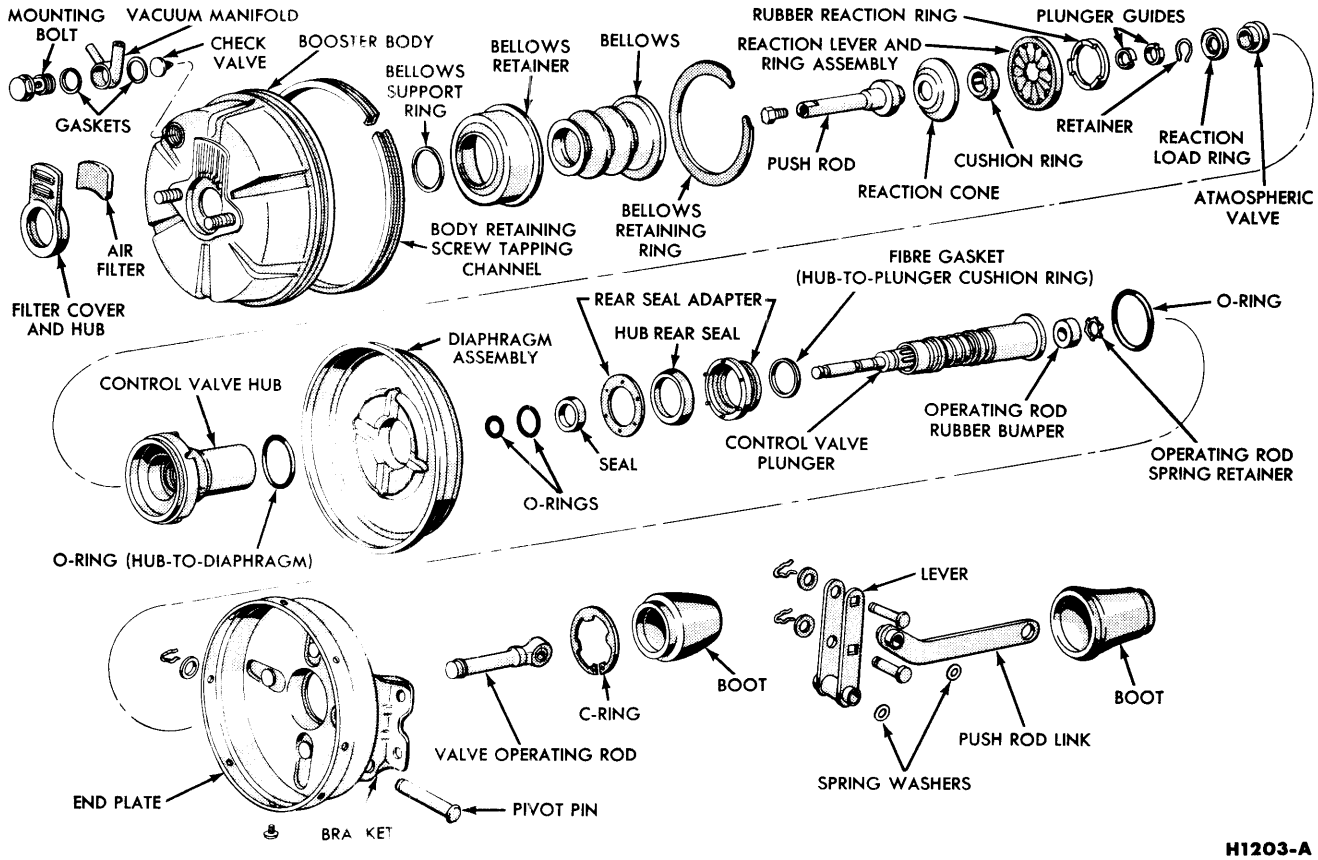

FIG. 10—Brake Booster—Exploded View

ASSEMBLY OF POWER UNIT

ASSEMBLY OF CONTROL VALVE PLUNGER

1. If the valve operating rod was removed from the old plunger assembly, install a new rubber bumper and spring retainer on the rod before assembling to the replacement plunger assembly (Fig. 10). Push the operating rod firmly until it bottoms in the plunger.

2. Install the fibre gaskets, the plunger seal, and the O-rings to the valve plunger assembly (Fig. 9).

3. Install the valve hub rear seal in the adapter assembly with the sealing lip toward the rear, then slide the adapter assembly onto the valve plunger with the small diameter end of the hub toward the rear (Fig. 9).

ASSEMBLY OF VALVE ASSEMBLY, PUSH ROD, AND BELLOWS TO DIAPHRAGM

1. Install the hub outer O-ring. Assemble the control valve plunger assembly with seal adapter and the control valve hub to the diaphragm. To do this, hold the hub to the front side of the diaphragm and insert the plunger assembly into the hub from the rear side of the diaphragm (Fig. 8).

2. Assemble first the atmospheric valve and then the reaction load ring to the valve plunger and hub. Compress the valve spring and install the load ring retainer in the groove of the plunger (Figs. 7 and 8). The retainer secures all the control valve components to the diaphragm.

3. Install the two plastic plunger guides in their grooves on the valve plunger assembly (Fig. 7).

4. Install the rubber reaction ring in the valve hub so that the ring locating knob indexes in the notch in the hub (Fig. 8) with the ring tips toward the front (Fig. 7).

5. Assemble the reaction lever and ring assembly, then install the assembly in the valve hub (Fig. 7).

6. Assemble the reaction cone and cushion ring to the push rod (Fig. 10). Install the push rod assembly to the valve hub so that the valve plunger indexes in the push rod (Fig. 7).

7. Assemble the bellows, retainer, and support ring (Fig. 10). The support ring is positioned on the middle fold of the bellows.

8. Position the bellows assembly and secure it to the diaphragm by installing the retaining ring (Fig. 6). **Make sure that the retaining ring is fully seated.**

ASSEMBLY OF MAJOR COMPONENTS

1. With a screwdriver, slightly move the booster body retaining screw tapping channel in order to provide a new surface for the self-tapping attaching screws (Fig. 10).

2. Install the diaphragm, the control valve components, and the bellows as an assembly to the booster body. **Make sure that the lip of the diaphragm is evenly positioned on the retaining radius of the booster body.** Pull the front lip of the bellows through the booster body and position it around the outer groove of the booster body (Fig. 5).

3. Install the O-ring in the front side of the end plate (Fig. 10) and position the end plate to the booster body. Align the scribe lines, compress the two assemblies together with a clamp, then install the attaching screws.

4. Install the large C-ring to the rear seal adapter at the rear side of the end plate.

PUSH ROD ADJUSTMENT

The push rod is provided with an adjustment screw to maintain the correct relationship between the booster control valve plunger and the master cylinder piston. Failure to maintain this relationship will prevent the master cylinder piston from completely releasing hydraulic pressure and can cause the brakes to drag.

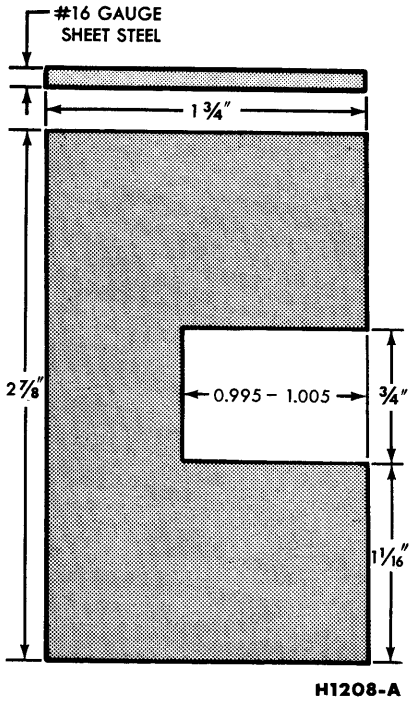

FIG. 11 – Push Rod Gauge Dimensions

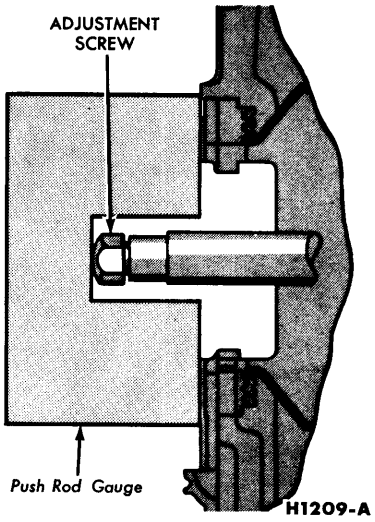

FIG. 12 – Push Rod Adjustment

To check the adjustment of the screw, fabricate a gauge of the dimensions shown in Fig. 11. Then place the gauge against the master cylinder mounting surface of the booster body as shown in Fig. 12. The push rod screw should be adjusted so that the end of the screw just touches the inner edge of the slot in the gauge.

INSTALLATION OF EXTERNAL PARTS

1. Install the rubber boot to the valve operating rod (Fig. 10).

2. Position the mounting brackets to the end plate, and install the retaining nuts.

3. Connect the lever assembly to the lower end of the mounting brackets with the pivot pin. Install the spring washer and hairpin clip.

4. Connect the valve operating rod to the upper end of the lever with connecting pin, spring washer, and clip.

5. Install the vacuum check valve, position the vacuum manifold and two gaskets, and secure the entire assembly to the booster body with the mounting bolt (Fig. 10). Torque the mounting bolt to specification.

6. Install the following parts to the booster body in the order indicated: first the air filter; then the filter cover and hub; and finally the brake master cylinder. Torque the master cylinder mounting nuts to specification.

PART 8-6 SPECIFICATIONS

BRAKES AND SUSPENSION

BRAKE CHECKS AND ADJUSTMENTS

Type of Check or Adjustment	Specification	
Brake Shoe Repair	**Drum Diameter** 11.030-11.060 inch	**Brake Lining Required** Oversize
	Brake Lining Clearance (Midway between Rivets) Maximum 0.005 inch	
	Lining Wear Limit (From Top of Rivets) Maximum 1/32 inch	
Master Cylinder	Hydraulic Master Cylinder Bore, Honed Diameter. Maximum .878 inch	
Power Unit	Push Rod Adjustment 0.995-1.005 inch	
Drum Out-of-Round	Refinish if Total Indicator Runout Exceeds 0.007 inch	

DIMENSIONS

Axle	Drum Inside Diameter (Inches)	Drum Maximum Boring Limit (Inches)	Lining Length (Inches)		Lining Width (Inches)		Wheel Cylinder Bore Diameter (Inches)	Master Cylinder Bore Diameter (Inches)
			Primary	Secondary	Primary	Secondary		
Front	11.030	11.060	9.039	12.21	3.00	3.00	1 3/32	7/8
Rear	11.030	11.060	9.039	12.21	3.00	3.00	15/16	7/8

TORQUE LIMITS

Description	Foot-Pounds
Front Anchor Pin Bolt	80-100
Spindle to Brake Carrier Plate Upper Bolts	25-35
Spindle to Brake Carrier Plate Lower Bolts	75-80
Master Cylinder Mounting Bolts	12-18
Mounting Bracket to Mounting Hub Nuts	85-115 Inch-Pounds
Master Cylinder to Booster	12-18
Booster to Dash Panel Mounting Nuts	12-18

FRONT WHEEL ALIGNMENT

CASTER

Caster Angle	−1½° to 0°
Maximum Caster Angle Difference Between Wheels	½°

CAMBER

Camber Angle	+¾° to 0°
Maximum Camber Angle Difference Between Wheels	½° (¼° preferred)
Maximum Allowable Thickness of Shim Stack at Each Bolt	11/16 inch
Amount of Camber Angle Change With 1/16-inch Change of Shim Thickness at Both Bolts	⅓°

FRONT AND REAR SUSPENSION

TORQUE LIMITS—FRONT SUSPENSION

Description	Ft.-Lbs.
Lower Arm Ball Joint Assembly to Spindle Nut	60-80
Upper Arm Ball Joint Assembly to Spindle Nut	60-80
Upper Arm Shaft to Bushing	15-25
Stabilizer Link Nuts	10-15
Shock Absorber to Spring Seat	15-25
Stabilizer Brackets to Frame	11-18
Strut to Lower Arm Nuts	85-115
Lower Ball Joint to Lower Arm	60-80
Upper Ball Joint to Upper Arm	60-80
Spindle Connecting Rod to Spindle Arm	40-55
Upper Arm Inner Shaft to Body	50-70
Strut to Underbody Bracket	70-90
Pivot Bracket to Underbody	85-115
Lower Arm Shim Retaining Bolt	10-15
Lower Arm Pivot Bolt	60-80
Lower Arm Ball Joint Preload	5-20 in-lbs at 1 rpm
Upper Arm Inner Shaft Bushings	100

FRONT AND REAR SUSPENSION (Continued)

FRONT COIL SPRING FREE HEIGHT

Yellow Marking	17½ inches

TREAD WIDTH AND WHEELBASE

Front Tread Width	61 inches
Rear Tread Width	60 inches
Wheelbase	113 inches

TOE-IN AND TOE-OUT

Toe-In	1/16-3/16 inch
Toe-Out on Turn (Angle of Inside Wheel When Outside Wheel is Turned 20°)	20½°

REAR LEAF SPRING

Body Style	Number of Leaves	Capacity at Normal Load Height	Spring Length at Normal Load
Hardtop	4	880-920 pounds	60 inches
Convertible	4	980-1020 pounds	60 inches

TORQUE LIMITS—REAR SUSPENSION

Description	Ft.-Lbs.
Rear Shock Absorber Stud Nut (Upper or Lower)	15-25
Rear Axle Bumper Bracket	22-28
Rear Spring Center Bolt	40-50
Rear Spring Front and Rear Shackle Nuts	22-28
Rear Spring Shackle Bar to Underbody Nut	22-28
Rear Spring Front Shackle Bracket Retaining Bolts	30-45
Rear Spring Shackle to Rear Spring Nut	22-28
Rear Spring U-Bolt Nut	60-70
Rear Spring Hanger to Frame	50-60

WHEELS AND TIRES

Tire Size and Ply Rating		8:00 x 14-4
Inflation Pressure (psi)	Front	24
	Rear	24
Wheel Nut Torque Limits (Ft.-Lbs.)		85-95

1962 FORD THUNDERBIRD SHOP MANUAL

GROUP 9

GENERATING AND STARTING SYSTEMS

		PAGE
PART 9-1	GENERATING SYSTEM AND BATTERY	9-2
PART 9-2	STARTING SYSTEM	9-12
PART 9-3	SPECIFICATIONS	9-20

PART 9-1 GENERATING SYSTEM AND BATTERY

Section		Page
1	Generating System Trouble Diagnosis	9-2
2	Generator Tests	9-3
3	Generator Repair	9-5
4	Generator Regulator	9-7
5	Battery	9-10

A schematic wiring diagram (Fig. 1) of the generating circuit shows the internal connections and windings of the various units. Color codes are shown to aid in tracing the circuit. Wire sizes are given as a guide for replacing any of the wires in the circuit.

Since the generator and generator regulator are precision built units, they must be checked with accurately calibrated instruments. Correct regulator setting requires that voltmeters be accurate to 0.05 (½ of one tenth) volt within the range of 13 to 16 volts, and that ammeters be accurate to 1 ampere between 30 and 50 amperes. All meters should be calibrated once a year and the date of calibration should be stamped on the meter face.

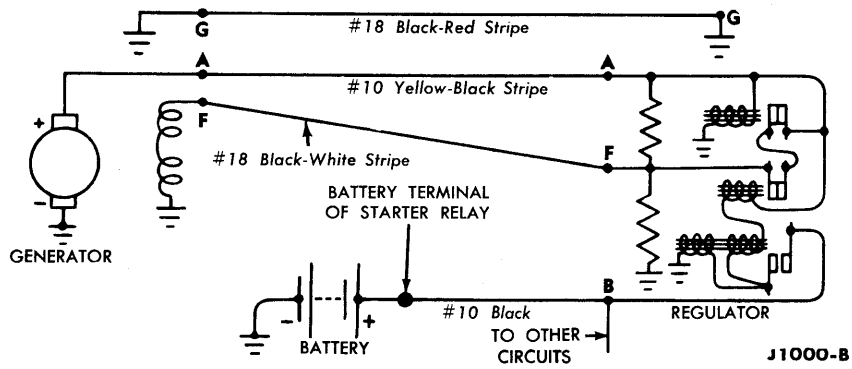

FIG. 1—Standard Generating System Schematic

1 GENERATING SYSTEM TROUBLE DIAGNOSIS

GENERATING SYSTEM TROUBLE DIAGNOSIS GUIDE

BATTERY LOW IN CHARGE

Indications of a battery low in charge are slow cranking, hard starting, and headlights dim at engine idle speed. Causes are:

1. The generator belt worn, or loose and slipping over the generator pulley.

2. The battery in such poor condition that it will not hold or take a charge.

3. The generator not producing its rated output.

4. Regulator units out of adjustment, and excessive resistance in the generator-to-battery circuit or in the battery-to-ground circuit.

First check the generator belt adjustment and condition.

RECHARGE OR REPLACE BATTERY

Perform a battery Before Charge Test (page 10-10). Replace the battery if the test indicates it is worn out or under capacity. If the battery capacity is normal, proceed as follows:

TEST GENERATOR OUTPUT

Test the generator output (page 10-3) to determine if the generator is at fault. If the output is normal or greater than the rating of the generator, proceed with a generator regulator test under the heading Test Generator Regulator. If the output is low proceed as follows:

GENERATOR OUTPUT LOW

Connect a heavy jumper wire from the battery ground post to the generator ground terminal. Repeat the generator output test. If the output now reaches or exceeds rated output, either the generator or the battery is not properly grounded to the engine frame. Replace the battery-to-ground cable if it is corroded or partially broken. Clean the cable connections at the battery and engine, and tighten the connections. Tighten the generator and generator mounting bracket bolts.

If the generator output is still less than normal, the generator output

CONTINUED ON NEXT PAGE

GENERATING SYSTEM TROUBLE DIAGNOSIS GUIDE (Continued)

BATTERY LOW IN CHARGE (Continued)	could be low due to an open or short circuit in the field, armature, brushes, or brush holders, or the brushes can be worn too short or may be sticking in the brush holder and not making good contact on the commutator. Remove the generator for repair. **TEST GENERATOR REGULATOR** If the generator output is normal, test the regulator to determine if it is properly adjusted. After checking all 3 regulator units, adjust or replace the regulator as necessary. If the regulator is not at fault, test the circuit resistance. **TEST CIRCUIT RESISTANCE** Check the external circuit to determine the circuit resistance (page 10-9).	**RESISTANCE EXCESSIVE** If the resistance (voltage drop) is greater than that specified for the car, locate the trouble by performing a complete external circuit resistance test (page 10-9). Repair or replace the defective part. **RESISTANCE NORMAL** If the resistance (voltage drop) is equal to or less than that specified for the car, the battery is low in charge due to improper operation such as: **1.** Excessive night driving. **2.** Excessive use of accessories. **3.** Short trips. **4.** Accidental discharge of battery. **5.** Incorrect engine lubricant for ambient temperature encountered.
HIGH CHARGING RATE	Indications of this symptom are: **1.** Generator, lights, or fuses burn out repeatedly. **2.** Battery requires too frequent refilling. **3.** The ignition contacts are burned. To determine the possible cause of the high charging rate, check the following items. **1.** Make certain that all connections, including the regulator ground, are tight.	**2.** Check the voltage regulation. If the voltage regulation is high, check the contacts and replace the regulator if the contacts are burned. **3.** If the contacts are in good condition, adjust the regulator to the specified limits (page 10-20). In cases where the generator itself burns out, in addition to the high voltage, a high setting of the current limiter could account for the failure.

2 GENERATOR TESTS

Standard generators are shunt wound (armature and field circuits connected in parallel), two-brush, high output generators. The generating system is a negative (−) ground system. Output is controlled by a regulator which is connected between the armature and field. The field is grounded internally (Fig. 1).

The armature shaft is supported by permanently-lubricated ball bearings which fit into the end plates (Fig. 10). The shaft is keyed to an integral pulley and cooling-fan assembly. The pulley is connected to the engine crankshaft pulley with a belt. The generator mounting is shown in Fig. 2.

The necessary equipment used in the six generator tests outlined below is as follows:

0-10 } Ammeter
0-100 }
0-20 Voltmeter
"Growler" Tester

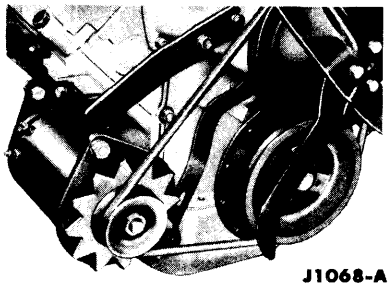

FIG. 2—Generator Mounting

Storage battery, assorted connecting wires, and jumper wires equipped with suitable connectors.

If the generator and regulator testing meters are combined into one unit, follow the manufacturer's operating instructions.

GENERATOR OUTPUT TEST

When a generator output test is conducted off the car, a generator-regulator test bench must be used. Follow the procedure given by the manufacturer.

To test the output of the generator on the car, proceed as follows (see Fig. 3):

Disconnect the regulator "ARM" and "FIELD" wires at the generator.

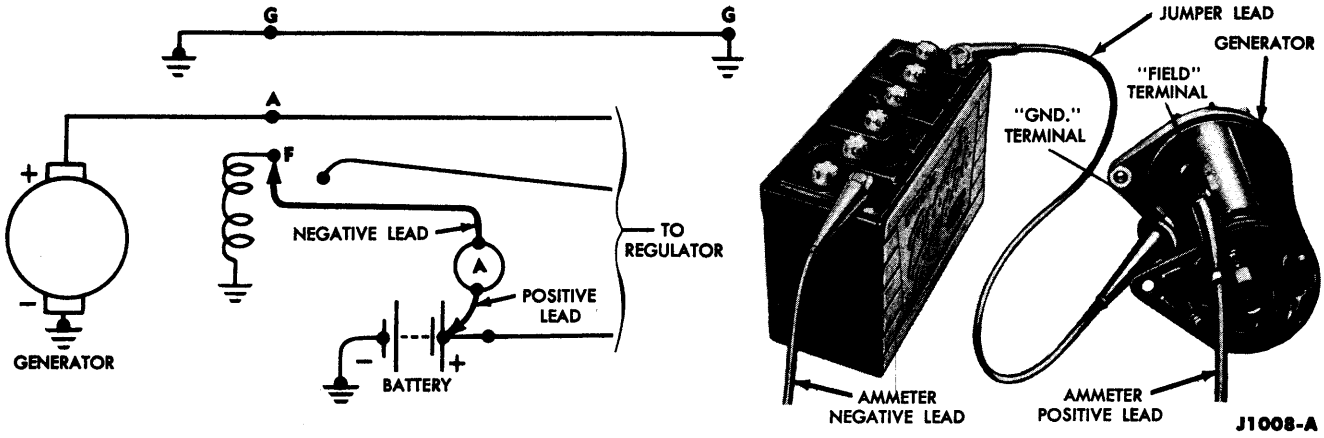

FIG. 3—Generator Output Test—Schematic and Connections

Connect a jumper wire from the generator "ARM" terminal to the generator "FIELD" terminal and the positive lead of a 0-100 ammeter to the generator "ARM" terminal. Start the engine and while it is idling, connect the ammeter negative lead to the battery. Run the engine at 1500 rpm, and read the current output on the ammeter. The generator output should reach or exceed 35 amperes. **Stop the engine and disconnect the test leads as soon as the test is completed to prevent overheating the generator.**

ARMATURE TESTS

Checking the armature for open, short, or grounded circuits can be done "off the car" only.

OPEN CIRCUIT TEST

An open circuit in the armature can sometimes be detected by examining the commutator for evidence of bad burning. A badly burned spot on the commutator is caused by an arc formed every time the commutator segment connected to the open circuit passes under a brush.

SHORT CIRCUIT TEST

To test the armature for a short circuit in the windings, a "growler" must be used as shown in Fig. 4. Rotate the armature slowly. When the shorted winding is under the steel strip, it will cause the strip to vibrate.

GROUNDED CIRCUIT TEST

To determine if the armature windings are grounded, make the connections as shown in Fig. 5. If the voltmeter indicates any voltage, the arma-

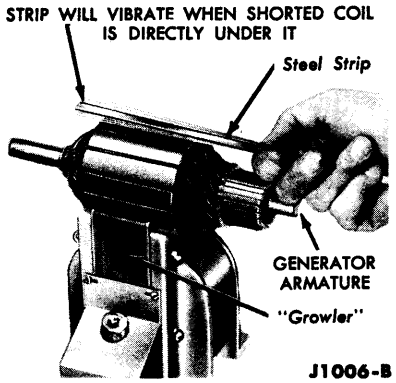

FIG. 4—Growler Test for Shorted Armature

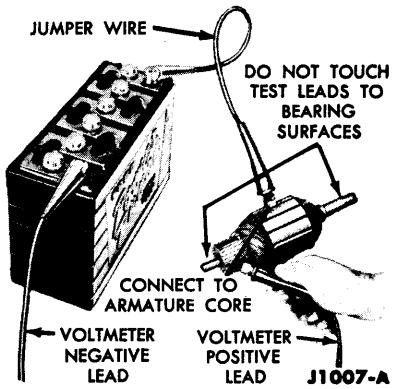

FIG. 5—Armature Grounded Circuit Test

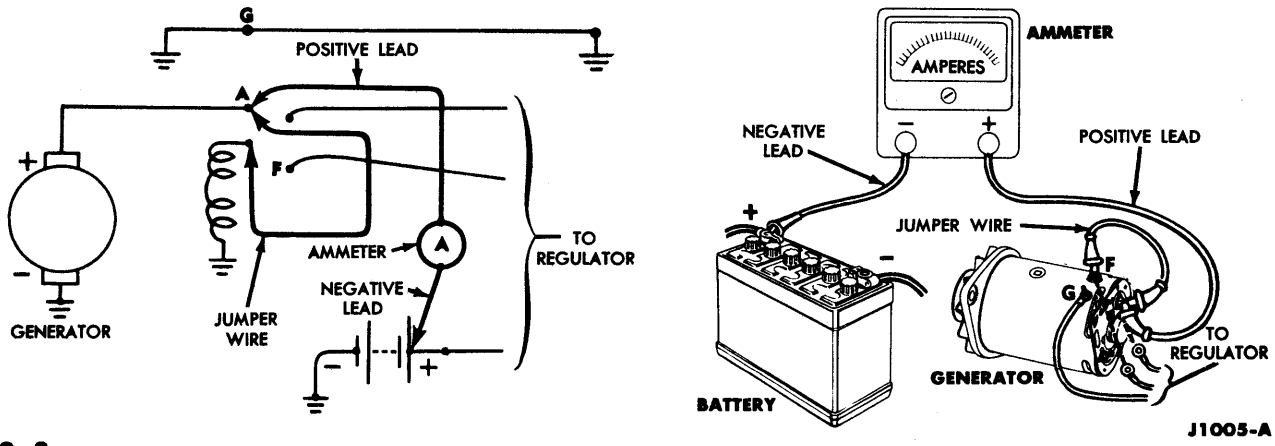

FIG. 6—Open Circuit Test of Field—Schematic and Connections

ture windings are grounded to the frame.

FIELD TESTS

Only two tests are necessary for checking the field. Both open and short circuits can be tested in one operation. The second test is for a grounded circuit.

OPEN OR SHORT CIRCUIT TEST

Disconnect the "FIELD" lead from the generator terminal. Connect a 0-10 ammeter from the battery to the "FIELD" terminal as shown in Fig. 6. The normal current draw, as indicated by the ammeter, should be 1.5 to 1.6 amperes. If there is little or no current flow, the field has a high resistance or is open. A current flow, considerably higher than that specified above, indicates shorted or grounded turns.

GROUNDED CIRCUIT TEST

Remove the "GRD" terminal stud from the generator frame. Make the voltmeter and battery connections as shown in Fig. 7. If the voltmeter indicates any voltage, the field coils are grounded. **Be sure that the "GRD" terminal stud is not touching the housing.**

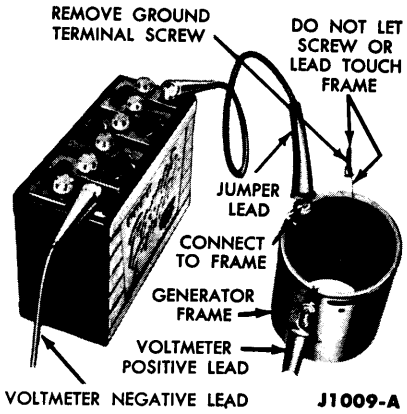

FIG. 7—Grounded Circuit Test of Field

3 GENERATOR REPAIR

The complete disassembly procedure is given in "Overhaul." However, "Armature Replacement," "Commutator Turning and Undercutting," and "Brush Replacement" can be accomplished without completely disassembling the generator. A disassembled view of the generator is shown in Fig. 8.

GENERATOR REMOVAL AND INSTALLATION

1. Disconnect the armature, field, and ground wires at the generator terminals.

2. Remove the adjustment arm to generator bolt, the generator belt, and the 2 pivot bolts from the mounting bracket. Then remove the generator (Fig. 2).

3. To install the generator, first clean the mating surfaces of the generator frame and mounting bracket.

4. Install the generator in the bracket with the 2 pivot bolts and lock washers.

5. Install the generator belt, and the adjustment arm to generator bolt. Adjust the belt tension and tighten all bolts securely.

6. Install the armature, field, and ground leads on the generator terminals.

OVERHAUL

Use the procedures outlined below for generator overhaul or when it is necessary to completely disassemble a generator for such purposes as bearing replacement or field coil replacement.

DISASSEMBLY

1. Remove the 2 generator through bolts and the brush end plate. Slide the armature assembly out the other end of the frame. **Do not lose the locating dowel if it drops out of the front end plate.** Remove the brushes, brush arms, and springs from the brush end plate.

2. Clamp the armature in a soft-jawed vise, and remove the retaining nut, lockwasher, pulley, and Woodruff key from the armature shaft.

3. Slide the front end plate off the armature shaft. **Be sure to remove any burrs from the keyway before removing the front end plate.** Remove the bearing stop ring and remove the bearing from the front end plate.

4. Remove the "field" and "ground" terminal screws from the generator frame, and unscrew the field pole shoe screws as shown in Fig. 9. The arbor press prevents the tool from slipping out of the screw socket.

5. Slide the pole shoes and field windings out of the frame, and separate the windings and shoes.

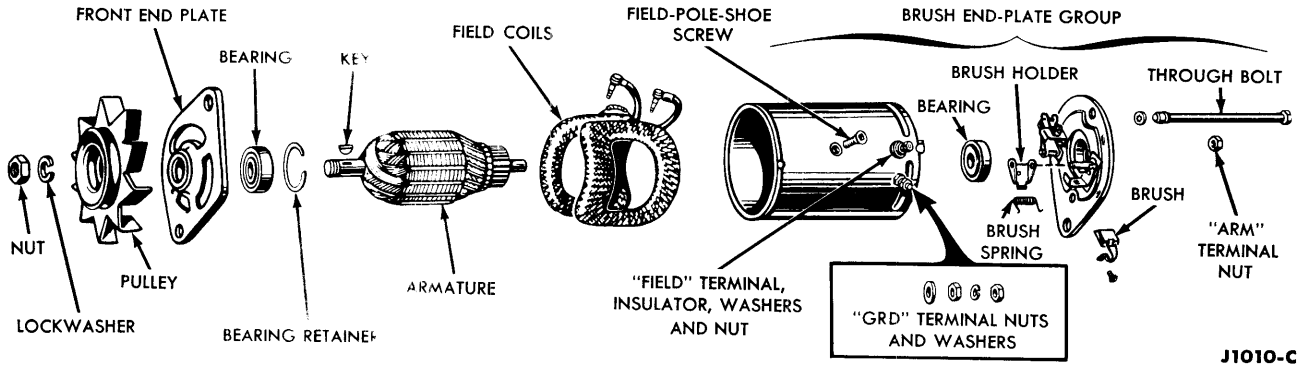

FIG. 8—Disassembled Standard Generator

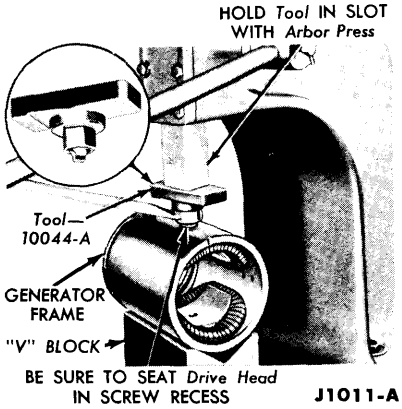

FIG. 9—Pole Shoe Screw Removal

CLEANING AND INSPECTION

1. Wash all parts except the armature, field coils, and ball bearings in solvent and dry the parts thoroughly.

2. Wipe off the armature and field windings, the commutator, and the armature shaft.

3. Check the condition of the bearings. If the ball bearings are worn or have lost their lubricant they must be replaced.

4. Check the armature winding for worn insulation, overheating, and unsoldered connections.

5. Check the armature for shorts, opens or grounds.

6. Check the field windings for worn insulation and unsoldered connections at the terminal screws. Resolder any connections as required.

7. Replace the armature or the field coils if the insulation is worn.

8. Check the commutator for runout and uneven or scored surfaces. Turn down the commutator and undercut the mica if necessary.

9. Inspect the brush end plate for poor insulation or loose rivets. Replace the end plate if the positive brush insulation is broken or cracked. Tighten any loose brush holder rivets.

10. Check the brush spring tension. If the tension is not within specifications, replace the springs.

ASSEMBLY

1. Install the field coils on the pole shoes, and mount the shoe and coil assemblies in the frame.

2. Tighten the field pole shoe screws (Fig. 9). **As the screws are tightened, strike the frame several sharp blows with a soft faced hammer to seat and align the pole shoes.**

3. Install the field and ground terminal screws, washers, and nuts in the frame.

4. Install the brush arms and springs. Insert new brushes in the brush holders and seat them (Fig. 11).

5. Move the brushes back in the holders until the brush arms ride against the side of the brushes to retain them in the retracted position.

6. Install the bearing in the front end plate and insert the bearing stop ring.

7. Slide the plate on the armature shaft (with the snap ring toward the armature windings), and install the Woodruff key, pulley, lock washer, and retaining nut.

8. Install the armature and front end plate assembly in the frame, locating the dowel in the frame groove.

9. Install the brush end plate (aligning the locating boss and frame groove), and install the through bolts with lock washers.

10. Use a piece of stiff wire with a hooked end to reach through the ventilating slots, and position the brush arms on top of the brushes.

POLARIZING GENERATORS

Normally, it is only necessary to polarize a generator when a generator has been rebuilt and if new pole shoes have been installed. Generators are polarized during manufacture, and normally, there is enough residual magnetism left to allow the generator to start charging.

To polarize a rebuilt generator mounted on the car, disconnect the field wire from the generator and momentarily connect a jumper wire from the generator field terminal to the battery positive terminal.

Do not polarize a generator by any method that applies battery voltage to the field terminal of the regulator, such as connecting a jumper wire directly from the battery to the generator field terminal, with the generator field wire connected. This action causes excessive current to flow from the battery through the regulator contacts to ground, thus burning the points.

ARMATURE REPLACEMENT

1. Remove the 2 through bolts and the brush end plate. Slide the armature and front end plate assembly out of the frame.

2. Clamp the armature in a soft-jawed vise, and remove the retaining nut, lock washer, pulley, and Woodruff key.

3. Remove any burrs or scratches from the keyway or shaft, and slide the drive end plate off the shaft.

4. Install the front end plate on the new armature.

5. Install the Woodruff key, pulley, lock washer, and retaining nut.

6. Slide the armature and front end plate assembly into the frame, aligning the dowel with the frame slot.

7. Install new brushes in the brush end plate, retract the brushes, until the brush arms ride against the side of the brushes, to retain them in the retracted position.

8. Install the end plate (aligning the locating boss and the frame slot). Install the through bolts with lock washers.

9. Use a piece of stiff wire with a hooked end to reach through the ventilating slots, and position the brush arms on top of the brushes.

COMMUTATOR TURNING AND UNDERCUTTING

Check the commutator runout as shown in Fig. 10. If the surface of the commutator is rough or more than 0.002 inch out of round, turn it down. Remove no more copper than necessary to clean up the commutator.

BRUSH REPLACEMENT

Replace the generator brushes when they are worn to ⅝-inch. Always

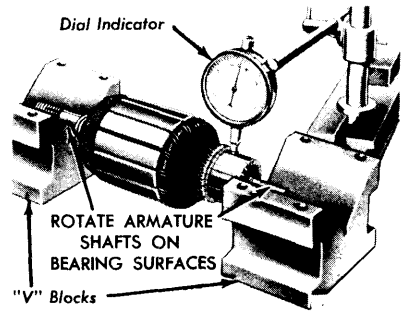

FIG. 10—Commutator Runout Check

change both brushes when replacement is required. If the brush wear has been excessive, check the condition of the commutator, and turn it down and undercut it if necessary.

1. Remove the 2 through bolts from the generator frame.

2. Remove the brush end plate and the armature and front end plate assembly from the generator frame

3. Disconnect the brush terminals and remove the brushes.

4. Clean the carbon and dirt from the brush end plate. Replace the end plate if the positive brush insulation is broken or cracked. Clean the commutator with sandpaper

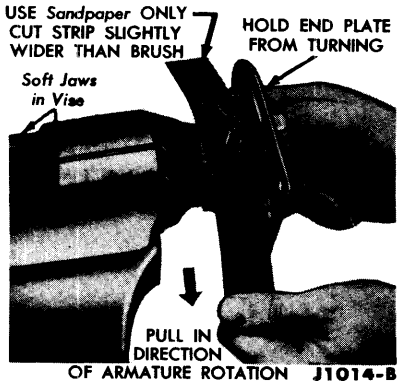

FIG. 11—Generator Brush Seating

5. Make sure that the new brushes slide freely in the brush holders. Seat the new brushes by sanding them in as shown in Fig. 11. Attach the brush terminals.

6. Retract the brushes until the brush arms ride against the side of the brushes, to retain them in the retracted position.

7. Install the armature and front end plate assembly and the brush end plate (aligning the dowel and locating boss and the frame slots).

8. Install the through bolts with lockwashers.

9. Use a piece of stiff wire with a hooked end to reach through the ventilating slots and position the brush arms on top of the brushes.

4 GENERATOR REGULATOR

OPERATION

The generator regulator is composed of 3 control units mounted as an assembly (Fig. 12). Each unit has a set of contact points and an energizing coil for operating the points, and each of the units performs a separate function to maintain control of the generator.

CUT OUT RELAY

When the engine is not operating, the contact points on the cut out relay (Fig. 12), are held open by spring tension. At approximately 12 volts, the coils are energized sufficiently to overcome the spring tension and close the cut out points connecting the generator to the external load.

VOLTAGE LIMITER RELAY

The voltage limiter holds the generator voltage below a predetermined setting by controlling the amount of voltage applied to the field coils. The voltage limiter thus protects the battery, lights, ignition system etc. from high voltage when the system load demand is low.

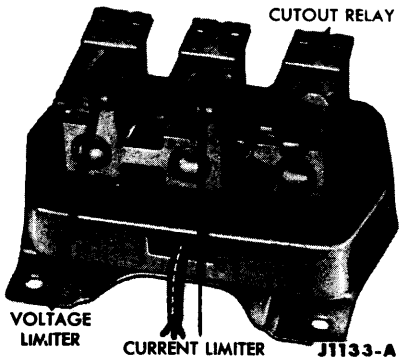

FIG. 12—Generator Regulator

CURRENT LIMITER RELAY

The current limiter protects the generator armature windings by limiting the maximum amount of current supplied by the generator. Like the voltage limiter, the current limiter performs its function by controlling the amount of current that is supplied to the generator field coils. It thus protects the generator when the system load demand is high.

TEMPERATURE COMPENSATION

The generator regulator has not only been designed to exercise automatic control over the generating system, but it will also compensate for seasonal temperature changes. In cold weather a higher voltage output is required to handle the load. In warm weather, the voltage must be reduced to avoid over-charging the battery. Therefore, it is necessary to establish a "normal" or stabilized regulator operating temperature to coincide with the specified voltage setting of 14.6 to 15.4 volts. The standard ambient air temperature established for this setting is 70° to 80° Fahrenheit. The regulator temperature for this or any setting, is defined as the temperature of the regulator after ½ hour of operation in the car or, after the regulator has been heated until it becomes stabilized.

CAUTION: **For correct voltage regulation adjustment, first be sure that the regulator has reached "Normal" operating temperature as just defined; then make the voltage adjustment setting to coincide with the prevailing, ambient air temperature. The specification section shows the proper voltage limits for various ambient air temperatures.**

ON THE CAR

On the car, ambient air temperature will be the temperature of the engine compartment air. To measure the air temperature, first clip the voltage regulation setting thermometer onto the regulator cover (Fig. 13).

When checking or adjusting the heavy duty regulator, observe the temperature indicated by the thermometer and refer to the specifica-

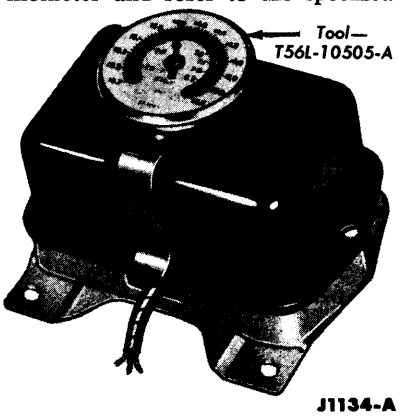

FIG. 13—Voltage Regulation Setting Thermometer

tion section for the correct voltage setting.

Run the engine to stabilize the regulator. The engine fan will cause the air in the engine compartment to circulate past the regulator until the regulator has stabilized at the ambient air temperature. After the regulator and thermometer have stabilized, the thermometer will show the voltage setting at which the regulator should be operating.

ON THE TEST BENCH

When the regulator is mounted on a regulator test bench, the ambient air temperature will be the room temperature. Clip the thermometer T56L-10505-A onto the regulator cover. Mount a small fan on the regulator test bench about 12 to 15 inches from the regulator. Operate the fan and the regulator to stabilize the regulator. The fan will provide sufficient air flow to ensure stabilization of the regulator at the temperature indicated by the thermometer. After stabilization, the thermometer will show the voltage setting at which the regulator should be operating.

REGULATOR AND CIRCUIT TESTS

Instruments and equipment for making the tests are listed below:

0-100 Ammeter
0-5 } Voltmeter
0-25 }
50 Ohm Field Rheostat (2 amp. rating)
Carbon Pile Rheostat (heavy duty)
1½ Ohm Resistor (200 watt rating)
Assorted connecting wires equipped with suitable connectors.

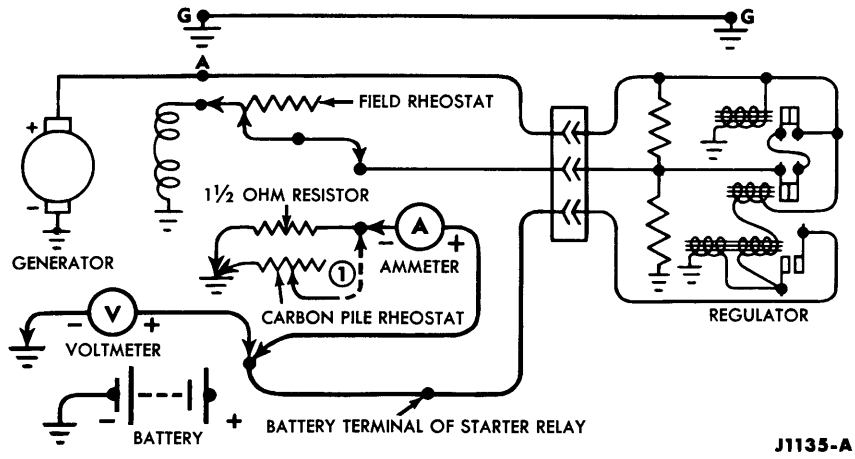

FIG. 14—Regulator Test Schematic

Special generator-regulator test benches incorporate the above equipment in one unit. When such combined equipment is used, be sure to follow the instructions of the manufacturer.

The 4 tests presented here are outlined for on-the-car operation and should be conducted in the sequence indicated. Be sure that the regulator is at "normal" operating temperature (equivalent to the temperature after 30 minutes of operation on the vehicle with 10 ampere load). Connect the test equipment as shown in Figs. 14 and 15.

CUT OUT TEST

Temporarily connect the battery cable to the battery. Start the engine and run it at approximately 1500 rpm. Remove the battery cable from the battery positive terminal. Decrease the resistance in the field circuit, and the voltage output of the generator, indicated by the voltmeter, will increase until the cut out closes. The cut out closing will be indicated by a rise of the ammeter needle and a "dip" of the voltmeter needle. The maximum voltage at the time the voltmeter needle dips or drops back will be the closing voltage of the cut out relay. This operation should be repeated to accurately determine the closing voltage of the cut out.

VOLTAGE LIMIT TEST

Reduce the resistance in the field circuit to zero. The ammeter should show an approximate 10 ampere load.

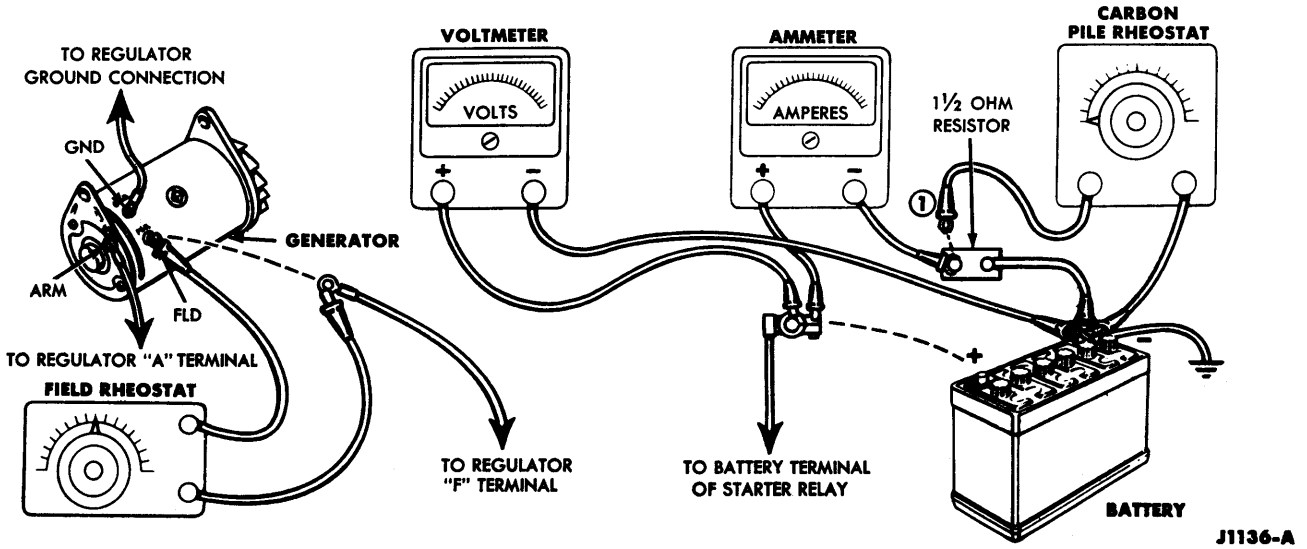

FIG. 15—Standard Regulator Test Connections

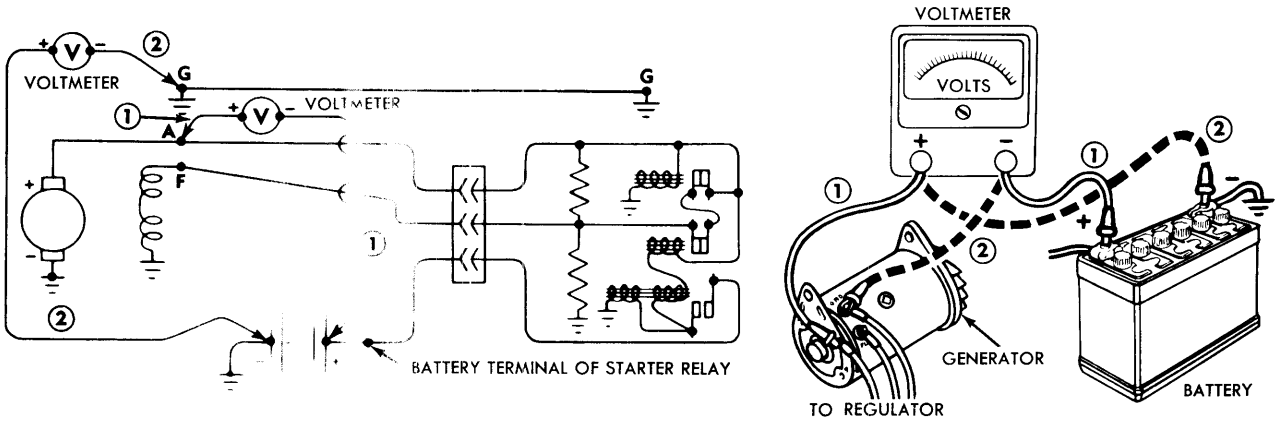

FIG. 16—Regulator External Circuit Test—Schematic and Connections

Read the voltage regulation on the voltmeter scale. Speed the engine momentarily to see if the voltage remains regulated.

CURRENT LIMIT TEST

Connect the carbon pile rheostat across the 1½-ohm resistor, (connection marked ① Figs. 14 and 15). With the engine speed at 1500 rpm, slowly decrease the resistance of the rheostat until the voltmeter reading drops to 13 volts. The ammeter will indicate the setting of the current limiter.

Stop the engine. Remove all test leads except the voltmeter leads. Install the battery cable on the battery and the generator field lead on the generator. Run the engine at 1500 rpm, and read the voltage regulation (under battery load) on the voltmeter. **The voltage reading will usually be low when the engine is first started because the battery is partially discharged. After a few moments of operation, the voltage will rise to the original value.**

EXTERNAL CIRCUIT RESISTANCE TEST

For the purpose of this test, the resistance values of the circuit have been converted to voltage drop readings for a current flow of 30 amperes. Connect the test equipment as shown in Fig. 16 to measure voltage drop around the circuit.

Crank the engine for 30 seconds with the ignition switch OFF to partially discharge the battery. Then start the engine and run it at approximately 1500 rpm.

Touch the voltmeter negative lead to the center of the battery positive post (Fig. 16, connections marked ①) to check the generator to battery circuit. The voltage drop should be less than 0.7 volt.

If the voltage drop in the generator to battery circuit exceeds 0.7 volt, locate the part of the circuit causing the trouble, by substituting a known good regulator for the regulator on the car. Stop the engine, disconnect the old regulator, and connect the new regulator. Run a jumper wire from the frame of the new regulator to the old regulator ground. Start the engine and measure the voltage drop again. If the voltage drop is still excessive, the excessive resistance is in the regulator to battery or the regulator to generator wires. Check for loose connections or partially broken wires.

Check the battery to generator ground circuit by connecting the voltmeter as shown in Fig. 16 (connections marked ②). The voltage reading should be less than 0.1 volt.

REGULATOR ELECTRICAL ADJUSTMENT

Final adjustment of the regulator must be checked with the regulator at normal operating temperature, the battery fully charged and the engine operating at 1500 rpm.

ADJUST CUT-IN VOLTAGE

The cut-in voltage is increased by bending the adjusting arm upward, or decreased by bending it downward (Fig. 17).

ADJUST VOLTAGE LIMIT

Make a regulator voltage setting test with the cover on. If the regulator voltage is not within the limits as shown in the table, for the ambient temperature involved, compute the difference as a positive or negative correction. Remove the regulator cover and make a new regulator voltage limit test. Adjust the new setting either up or down by the amount of the correction just computed. If the voltage is less than that specified, increase the spring tension by bending the adjusting arm upward (Fig. 18). To decrease the voltage, bend the adjusting arm downward. Check the voltage setting with the regulator cover replaced.

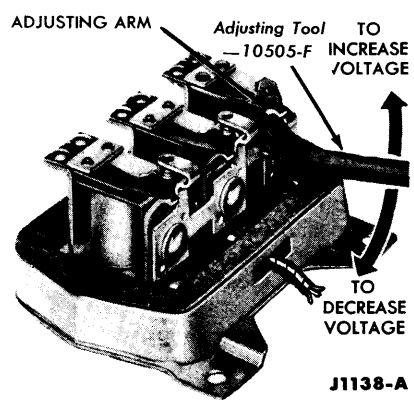

FIG. 17—Cut-In Voltage Adjustment

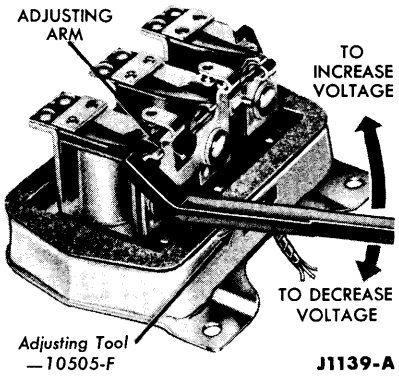

FIG. 18—Voltage Limit Adjustment

ADJUST CURRENT LIMIT

If the current limit on the regulator is less than that specified, increase the spring tension by bending the adjusting arm upward (Fig. 19). To decrease the current limit, bend the adjusting arm downward. Install the cover.

REGULATOR REPLACEMENT

Disconnect the battery ground cable. Disconnect the regulator terminal blocks. Remove the mounting screws and the regulator. **Always disconnect a battery cable when working on the regulator to prevent an accidental short circuit of the battery lead to ground.**

To install the regulator, replace it in position and install the mounting screws. Mount the ground wire terminal under the mounting screw closest to the "ARM" terminal. Connect the regulator terminal blocks. Connect the battery ground cable.

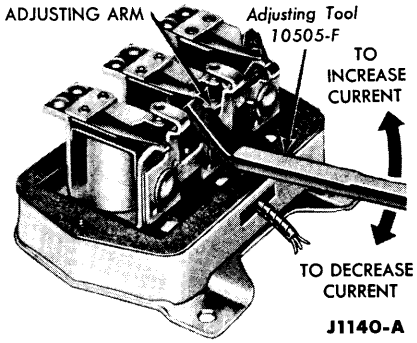

FIG. 19—Current Limit Adjustment

5 BATTERY

BATTERY TESTS AND CONCLUSIONS

Tests are made on a battery to determine the state of charge and also the condition. The ultimate result of these tests is to show that the battery is good, needs recharging, or must be replaced.

If a battery has failed, is low in charge, or requires water frequently, good service demands that the reason for these conditions be found. It may be necessary to follow trouble shooting procedures to locate the cause of the trouble (Page 10-2).

Some battery test equipment combines the necessary instruments and controls in a single unit. Be sure to follow the directions of the manufacturer when using such combined equipment.

Hydrogen and oxygen gases are produced in the course of normal battery operation. Flames or sparks can cause this gas mixture to explode if they are brought near the vent openings of the battery. The sulphuric acid in the battery electrolyte can cause a serious burn if spilled on the skin or splattered in the eyes. It should be flushed away immediately with large quantities of clear water.

BEFORE CHARGE TESTS

BATTERY CAPACITY TEST

A high-rate discharge tester in conjunction with a voltmeter is used for this purpose. Figure 20 shows the entire battery test in outline form. **If the battery solution is not within 60°F. to 100°F., let it stand until warm before making this test.** Add water if necessary to bring the battery solution to the proper level. **Fill only to the narrow ring near the bottom of each vent well.**

1. Connect the high-rate discharge tester and the appropriate voltmeter to the battery terminals.

2. Adjust the discharge tester to draw 3 times the ampere hour rating of the battery. After 15 seconds and with the battery still under load, read the battery terminal voltage. **The voltmeter clips must contact the battery posts and not the high rate discharge tester clips. Unless this is done the actual battery terminal voltage will not be indicated.**

3. If the terminal voltage is 9.25 volts or more, the battery has good output capacity and will accept a normal charge. Test the specific gravity if water has not been recently added, and recharge if necessary.

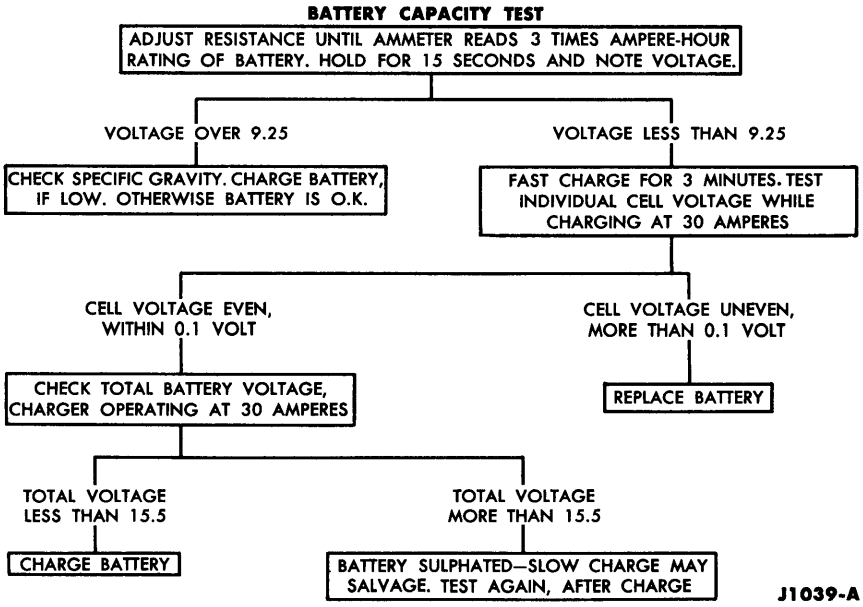

FIG. 20—Battery Capacity Test Outline

4. If the terminal voltage is below 9.25 volts, make a test charge on the battery. **When making a capacity test in areas where consistent zero temperatures occur, the terminal test limit voltage should be increased from 9.25 to 9.65 volts.**

Battery Test Charge. The condition of a discharged battery may be tested by passing current through it.

1. Connect a fast charger to the battery and charge the battery for 3 minutes at a rate of 30 amperes.

2. After 3 minutes of fast charge, and with the fast charger still operating, test the individual cell voltages of the battery.

3. If the cell voltages vary more than 0.1 volt, replace the battery. If the cell voltages are even within 0.1 volt, test the total battery voltage (charger still operating).

4. If the total battery voltage is now under 15.5 volts, the battery is satisfactory and may be safely fast charged (see Specifications page 10-20). **Always follow the fast charge with sufficient slow charge to bring the battery to a full charge.**

5. If the total battery voltage was over 15.5 volts, the battery is probably sulphated. Place the battery on continued slow charge.

AFTER CHARGE TESTS

When the battery is fully charged (check with a hydrometer or battery charge tester) make a capacity test. If the terminal voltage is 9.25 volts or above, place the battery back in service. If the terminal voltage is below 9.25 volts, replace the battery.

BATTERY CHARGE TESTS

Battery charge may be tested by measuring the battery electrolyte solution specific gravity (hydrometer) or by measuring the voltage of the battery cells on open circuit (no current flow) with a battery charge tester (open circuit voltage tester).

A discharged 12-volt battery can freeze during cold weather. The Specifications section (page 10-20), shows the temperatures at which batteries of various specific gravities will begin to freeze.

BATTERY CHARGING

A battery that is not sulphated may be charged by either a fast charging or slow charging method. Most fast charge units may be adjusted for making a slow charge.

FAST CHARGING

Follow the instructions of the fast charger manufacturer, as fast chargers vary slightly with different manufacturers.

Test the battery cells for specific gravity. Then, fast charge the battery at 30 to 40 amperes maximum for the length of time shown in the Specifications section (page 10-20), corresponding to the specific gravity condition of the battery.

SLOW CHARGING

Always follow a fast charge with a slow charge at 3 amperes for 12-volt batteries of less than 70-ampere-hour capacity. Batteries of 70 ampere-hour capacity or higher require a 4-ampere slow charge. Continue the slow charge until the battery is fully charged. A battery is considered fully charged when the specific gravity readings of all the cells, taken at hourly intervals, do not increase over a 3-hour period.

PART 9-2 STARTING SYSTEM

Section		Page
1	Starter Trouble Diagnosis	9-12
2	Starter and Starter Circuit Tests	9-14
3	Starter Repair	9-17
4	Starter Drive	9-19

The function of the starting system is to crank the engine at a high enough speed to permit it to start. The system includes the starter motor and drive, the battery, a remote control starter switch, and heavy circuit wiring.

A schematic diagram of the starting circuit, shown in Fig. 1, illustrates the internal connections of the starting system units.

Thunderbirds equipped with a Cruise-O-Matic transmission have a lockout switch, in the starter control circuit (Fig. 1), which prevents operation of the starter if the selector lever is not in the N (neutral) or P (park) position.

In most cases of starting difficulty, the trouble may be divided into 4 symptoms: the engine will crank but will not start; the engine will not crank; the starter spins but does not crank the engine; and the engine cranks slowly.

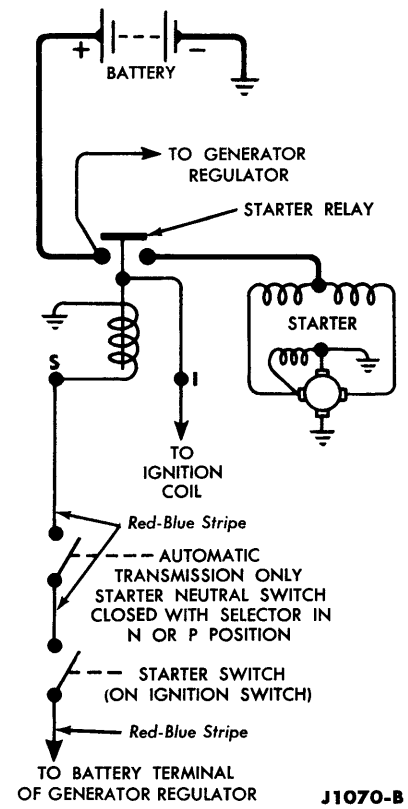

FIG. 1—Starting Circuit

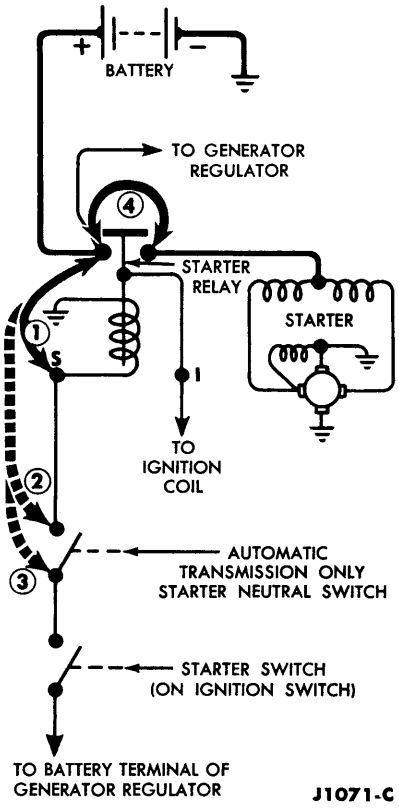

FIG. 2—Starting Circuit Test

1 STARTER TROUBLE DIAGNOSIS

If the engine cranks but will not start, the trouble is in the engine (fuel, ignition, engine parts) and not in the starting system. If the engine will not crank even with a booster battery connected, engine parts may be seized or the starter may be faulty. If the engine cranks but cannot be started with a booster battery connected, attempt to start it by pushing the car. If it still will not start, push or tow the car to the shop for a complete diagnosis. **Do not push or tow a car equipped with an automatic transmission for more than 12 miles, nor faster than 30 mph, without raising the rear wheels off the ground, or disconnecting the driveshaft.**

STARTER TROUBLE DIAGNOSIS GUIDE

ENGINE WILL NOT CRANK AND STARTER RELAY DOES NOT CLICK	1. The battery may be discharged. 2. The ignition switch, starter neutral switch or starter relay may be inoperative. 3. The circuit may be open or contain high resistance.	**CHECK BATTERY** Perform a Battery Capacity Test. If the battery does not test as having good capacity, make a Battery Test Charge. Replace the battery if the test indicates that it is worn out or under capacity.

CONTINUED ON NEXT PAGE

STARTER TROUBLE DIAGNOSIS GUIDE (Continued)

ENGINE WILL NOT CRANK AND STARTER RELAY DOES NOT CLICK (Continued)	**CHECK STARTER RELAY** **1.** Disconnect and ground the high tension lead from the spark coil so that the engine cannot start. **2.** With a fully charged battery, operate the starter to crank the engine. If the engine will not crank and the relay does not click, connect a jumper lead from the battery terminal of the relay to the starter switch terminal of the relay (Fig. 2, connection ①). If the engine does not crank, the starter relay is probably defective. **3.** If the engine cranks in Step 2, connect a jumper lead from the battery terminal of the relay to the relay side of the neutral switch (Fig. 2, connection ②). If the engine does not crank, the wire or a connection between the neutral switch and the relay is loose or broken. **4.** If the engine cranks in Step 3, connect the jumper lead from the battery terminal of the relay to the ignition switch side of the neutral switch (Fig. 2, leads ③). If the engine does not crank, the neutral switch is out of adjustment or defective. **5.** If the engine cranks in the preceding steps, there are 3 possible defects. The wire from the battery terminal of the regulator to the ignition switch is loose or broken. The ignition switch starter terminal is defective. The wire from the starter switch to the automatic transmission neutral switch or to the starter relay is loose or broken.
ENGINE WILL NOT CRANK BUT STARTER RELAY CLICKS	If the relay clicks when the ignition switch is operated, connect a heavy jumper from the relay battery terminal to the relay starter motor terminal (Fig. 2, connection ④). If the engine cranks, replace the relay. If the engine does not crank, observe the spark when connecting and disconnecting the jumper. If there is a heavy spark, see Check Engine and Starter Drive below. If the spark is weak or if there is no spark at all, proceed as follows: **CHECK CABLES AND CONNECTIONS** If the spark at the relay is weak when the jumper is connected, inspect the battery starter cables for corrosion and broken conductors. Check the ground cable to see if it is broken or badly corroded. Inspect all cable connections. Clean and tighten them if necessary. Replace any broken or frayed cables. If the engine still will not crank, the trouble is in the starter, and it must be repaired or replaced. **CHECK ENGINE AND STARTER DRIVE** If a heavy spark is obtained when the jumper wire is connected, remove all the spark plugs, and attempt to crank the engine with the starter. If the engine cranks with the spark plugs removed, water has probably leaked into the cylinders causing a hydrostatic lock. The cylinder heads must be removed, and the cause of internal coolant leakage eliminated. If the engine will not crank, loosen the starter mounting bolts to free the starter pinion. If the starter drive is locked, remove the starter from the engine, and examine the starter drive pinion for burred or worn teeth. Examine the teeth on the flywheel ring gear for burrs and wear. Replace the pinion or the flywheel ring gear if they are worn or damaged. If the starter drive is not locked, remove the starter from the engine, and perform the no-load current test. The starter should run freely. Compare the reading obtained from the ammeter with the no-load current draw specification for the starter. If the current reading at no load speed is below specifications, the starter has high resistance and should be repaired. If the current reading is above normal, and the starter is running

CONTINUED ON NEXT PAGE

STARTER TROUBLE DIAGNOSIS GUIDE (Continued)

ENGINE WILL NOT CRANK BUT STARTER RELAY CLICKS (Continued)	slower than it should at no load, it is probably due to tight or defective bearings, a bent shaft, or the armature rubbing the field poles. A shorted coil in the starter also causes the current reading to be high. Disassemble the starter and determine the cause.	Repair if possible, or replace the starter. If the no-load current reading of the starter is normal, the engine is seized and cannot be turned by the starter. Disassemble the engine and repair or replace the defective parts.
STARTER SPINS BUT DOES NOT CRANK THE ENGINE	If the starter spins but will not crank the engine, the starter drive is worn or dirty and is sticking on the	starter shaft, or is broken. Clean or repair the starter drive as required.
ENGINE CRANKS SLOWLY	Several causes may result in this symptom: **1.** The battery may be low in charge. **2.** There may be excessive resistance in the starter circuit. **3.** The starter may be faulty. **4.** The engine may have excessive friction. **CHECK BATTERY** Test the state of charge of the battery. If the battery is discharged, recharge the battery, and check the starter relay for possible internal shorts to ground that may have caused the battery to discharge. Perform a Battery Capacity Test (page 10-10). If the battery does not test as having good capacity, make a Battery Test Charge (page 10-11). Replace the battery if the test indicates it to be worn out or under capacity. **CHECK EXTERNAL CIRCUIT VOLTAGE DROP** If the battery was fully charged in the previous test, test the starter external circuit voltage drop. The voltage drop will be either excessive or normal. **VOLTAGE DROP (RESISTANCE) EXCESSIVE** Locate the exact part of the circuit with the excessive resistance.	**1.** To correct excessive resistance in the battery-to-starter-relay-cable, clean and tighten the cable connections. Recheck the voltage drop. If it is still excessive, replace the cable. **2.** To correct excessive resistance of the starter relay contacts, replace the starter relay. **3.** To correct excessive resistance in the starter relay-to-starter-motor cable, clean and tighten the cable connections. Recheck the voltage drop. If it is excessive, replace the cable. **4.** To correct excessive resistance in the battery-to-ground cable, clean and tighten the cable connections. Recheck the voltage drop. If it is still excessive, replace the cable. **VOLTAGE (RESISTANCE) DROP NORMAL** If the voltage drop (resistance) is normal, test the starter current draw while the starter is cranking the engine. If the starter current is below specifications, proceed as follows: **Cranking Current Low.** Remove the starter from the engine, and repair or replace it. **Cranking Current Normal or High.** Test the starter current draw at no-load. If the no-load current draw is above or below specifications, repair or replace the starter. If the current draw at no load is normal, the starter is not at fault. The engine has excessive friction, and the cause must be determined. Repair or replace faulty parts.

2 STARTER AND STARTER CIRCUIT TESTS

DESCRIPTION

Heavy cables, connectors, and switches are used in the starting system because of the high current required by the starter while it is cranking the engine. The amount of resistance in the starting circuit must be kept to an absolute minimum to provide maximum current for starter operation. Loose connections, corroded relay contacts, and partially broken cables will result in slower than normal cranking speed, and may even prevent the starter from cranking the engine.

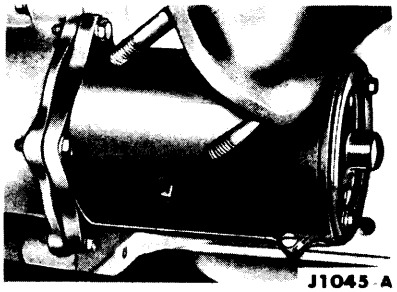

FIG. 3—Starter Mounting

The starter is a four-brush, series-parallel wound unit. The circuit to the starter is completed by means of a relay controlled by a switch which is part of the ignition switch mounted on the instrument panel. The return circuit is through the starter housing, engine block, and battery ground cable to the battery.

Figure 3 shows the starter mounted on the engine.

Five different tests of the starter and its circuit are described. Arrangement of these tests is not intended to indicate an order of procedure. The selection of the test to be made is controlled by the circumstances encountered, usually as a result of analyzing troubles as covered in trouble shooting. The following units will be needed to perform the test procedures:

0-1, 0-20 — Voltmeter

0-50, 0-300 — Ammeter

Carbon Pile Rheostat (heavy duty)

Assorted connecting wires and jumper wires equipped with suitable connectors.

STARTER LOAD TEST

Connect the test equipment as shown in Fig. 4. Be sure that no current is flowing through the ammeter and carbon pile rheostat portion of the circuit (rheostat at maximum resistance). Crank the engine with the ignition OFF, and determine the exact reading on the voltmeter. **This test is accomplished by disconnecting and grounding the high tension lead from the spark coil, and by connecting a jumper from the battery terminal of the starter relay to the ignition switch terminal of the relay.**

Stop cranking the engine, and reduce the resistance of the carbon pile until the voltmeter indicates the same reading as that obtained while the starter cranked the engine. The ammeter will indicate the starter current draw under load. This reading should be a maximum of 190 amperes with the engine at normal operating temperature.

STARTER NO-LOAD TEST

This test will uncover such faults as open or shorted windings, rubbing

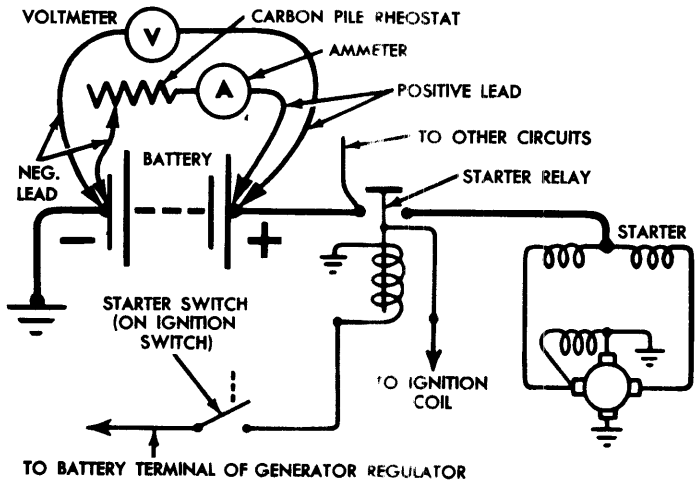

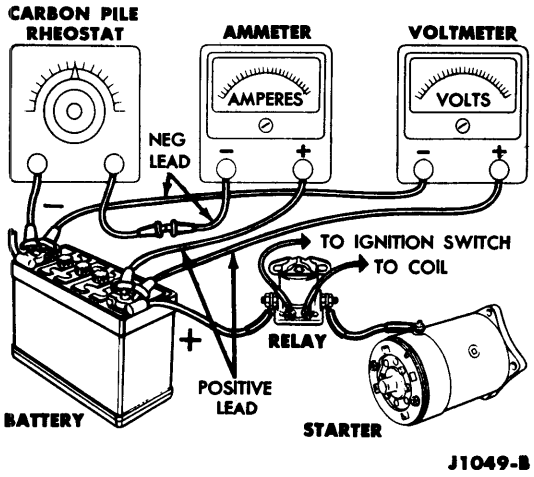

FIG. 4—Starter Load Test

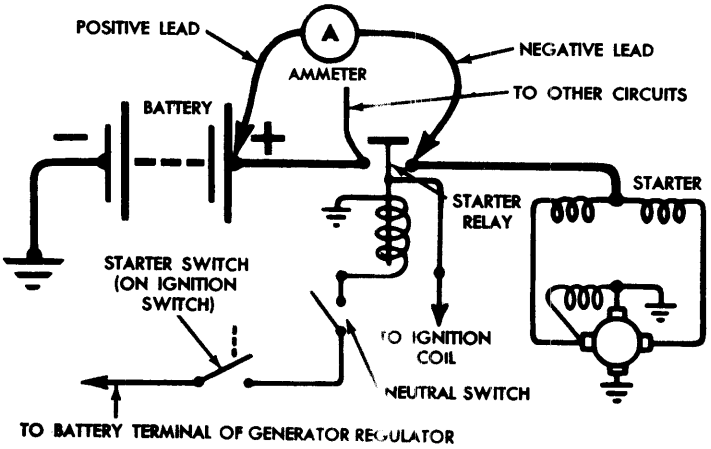

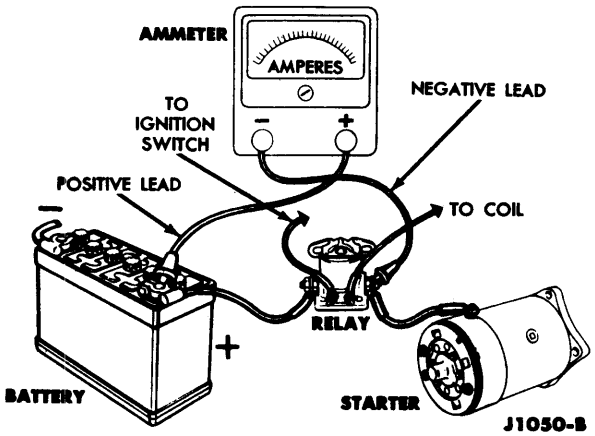

FIG. 5—Starter No Load Test

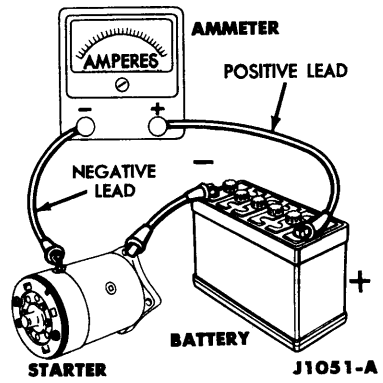

FIG. 6—Starter No Load Test on Test Bench

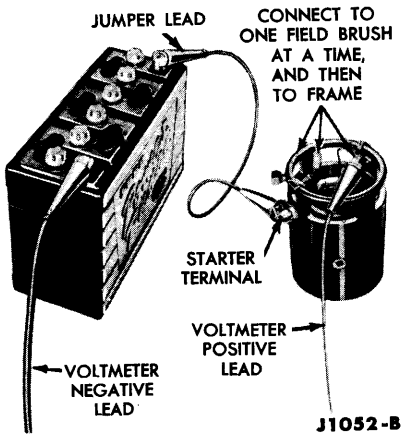

FIG. 7—Field Open Circuit Test

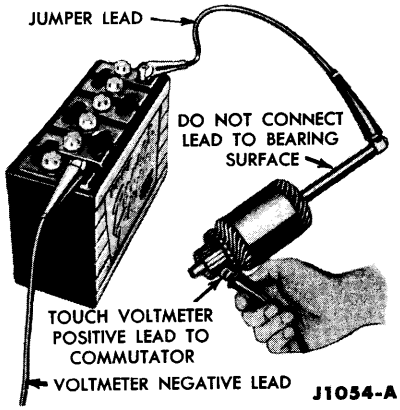

FIG. 8—Grounded Circuit Armature Test

armature, and bent armature shaft. The starter can be tested, at no-load, either on the engine or test bench.

ON ENGINE

To test the starter, the engine must be running at idle speed to prevent the starter drive from engaging the flywheel. With the engine idling, make the ammeter connections as shown in Fig. 5. The no-load current draw on the ammeter should be 80 amperes maximum.

ON TEST BENCH

Connect the starter to a battery with an ammeter in the circuit as shown in Fig. 6. The starter will run at no-load, and the current draw indicated on the ammeter should be 80 amperes maximum.

ARMATURE AND FIELD OPEN CIRCUIT TEST—TEST BENCH ONLY

An open circuit armature may sometimes be detected by examining the commutator for evidence of burning. The spot burned on the commutator is caused by an arc formed every time the commutator segment connected to the open-circuit winding passes under a brush.

An open circuit test of the field can be made on the test bench by connecting a voltmeter and battery as shown in Fig. 7. Since the starter has 3 field windings, it will be necessary to check each of the windings separately. If no voltmeter reading is obtained, the coil is open.

ARMATURE AND FIELD GROUNDED CIRCUIT TEST—TEST BENCH ONLY

This test will determine if the winding insulation has failed, permitting a conductor to touch the frame or armature core.

To determine if the armature windings are grounded, make the connections as shown in Fig. 8. If the voltmeter indicates any voltage, the windings are grounded.

Grounded field windings can be detected by making the connections as shown in Fig. 9. If the voltmeter indicates any voltage, the field windings are grounded.

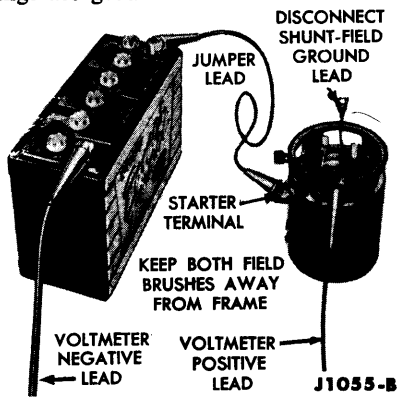

FIG. 9—Grounded Circuit Test of Field

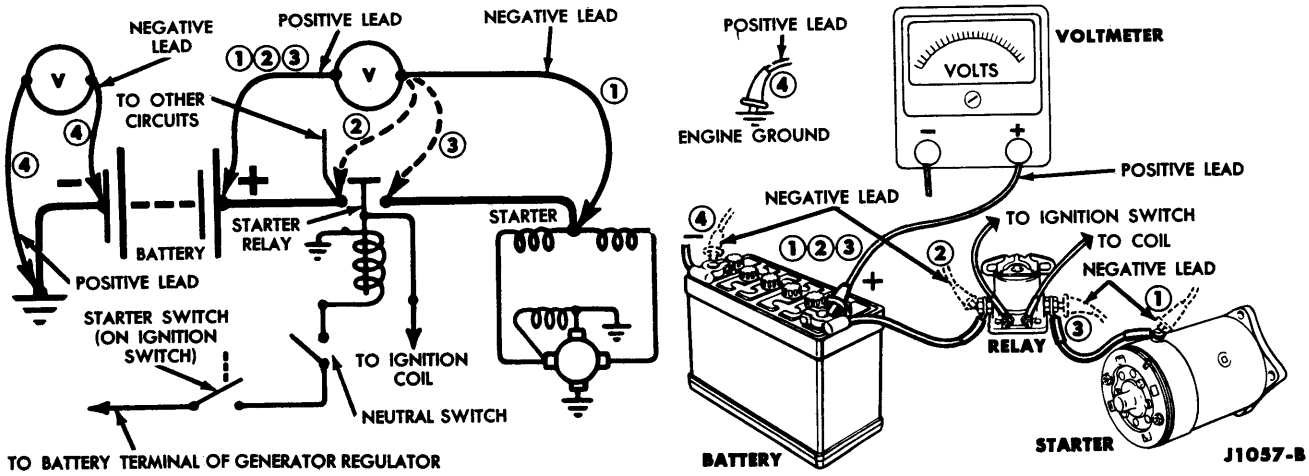

FIG. 10—Starter Circuit Test

STARTER CIRCUIT TEST

Excessive resistance in the starter circuit can be determined from the results of this test. Make the test connections as shown in Fig. 10. Crank the engine with the ignition OFF. **This test is accomplished by disconnecting and grounding the high tension lead from the spark coil and by connecting a jumper from the battery terminal of the starter relay to the ignition switch terminal of the relay.**

The voltage drop in the circuit will be indicated by the voltmeter. Maximum allowable voltage drop should be:

Connections marked ① . . .0.5 volt
Connections marked ② . . .0.1 volt
Connections marked ③ . . .0.3 volt
Connections marked ④ . . .0.1 volt

3 STARTER REPAIR

In many cases it will not be necessary to completely disassemble the starter to accomplish repair or replacement of certain parts. Paragraphs "Armature Replacement," "Commutator Turning," and "Brush Replacement," below, are procedures which eliminate the steps in disassembly that do not apply to these particular operations.

REMOVAL AND INSTALLATION

Disconnect the starter cable at the starter terminal, remove the clutch housing to starter screws, then remove the starter assembly. **It may be necessary to tilt the starter slightly to clear the starter drive around the flywheel.** On the high performance engine remove the right hand exhaust manifold first.

When installing the starter, assemble the motor to the engine. Install the clutch housing to starter screws. Snug all bolts, then tighten to 15 to 20 ft-lbs, tightening the middle bolt first. The automatic transmission dipstick tube bracket is mounted under the starter side mounting bolt.

Make certain that the rubber seal is properly positioned before mounting the starter. If trouble is encountered in keeping the seal in position, apply rubber cement to both the seal and the engine block to hold the seal in position while mounting the starter.

STARTER OVERHAUL

Use the following procedure when it becomes necessary to completely overhaul the starter. Figure 11 illustrates the starter completely disassembled.

DISASSEMBLY

1. Remove the starter drive, through bolts, and rear end plate (Fig. 11). **Be sure to remove all burrs from the shaft to prevent scoring the rear end plate bushing.**

2. Remove the armature and remove the cover band.

3. Remove the brushes from their holders, and remove the brush end plate.

4. Unscrew the ground brush screws, and remove the ground brushes.

5. Unscrew the 3 field-pole-shoe screws as shown in Fig. 12. The arbor press prevents the wrench from slipping out of the screw.

6. Unsolder the field coil leads from the terminal screw, and remove the pole shoes and field coils from the frame.

7. Remove the nut and washers from the terminal and remove the terminal. **Remove any excess solder from the terminal slot. Use a 300-watt soldering iron for soldering operations on the starter terminal.**

CLEANING AND INSPECTION

1. Wipe the field coils, armature, and armature shaft with a clean cloth. Wash all other parts in solvent and dry the parts.

2. Inspect the armature windings for broken or burned insulation and unsoldered connections.

3. Check the armature for open circuits and grounds.

4. Check the commutator for runout (Fig. 13). Inspect the armature shaft and the 2 bearings for scoring and excessive wear.

5. Check the brush holders for broken springs and the insulated brush holders for shorts to ground.

6. Check the brush spring tension. It should be 48-56 ounces. Replace the springs if the tension is not within limits.

7. Inspect the field coils for burned or broken insulation. Check the field brush solder connections and lead insulation.

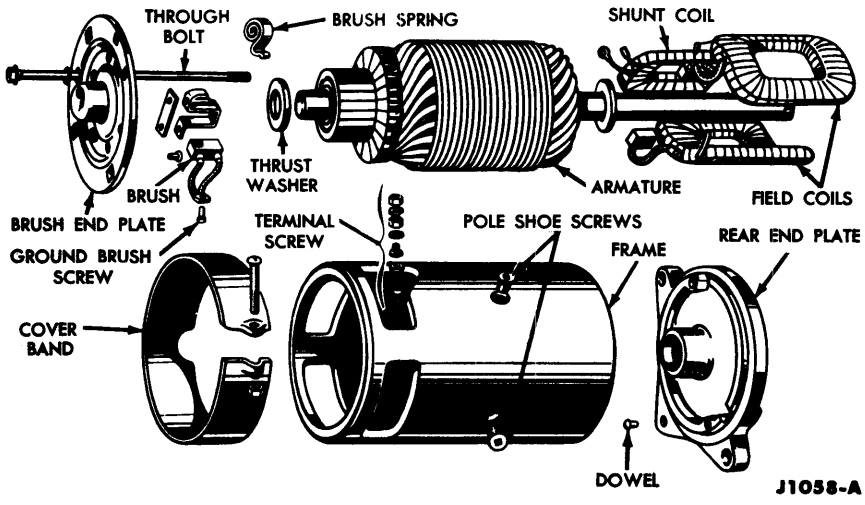

FIG. 11—Disassembled Starter Motor

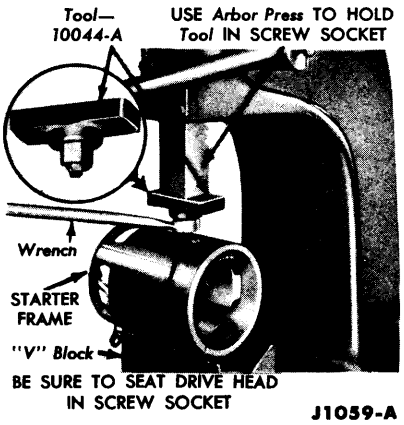

FIG. 12—Pole Shoe Screw Removal

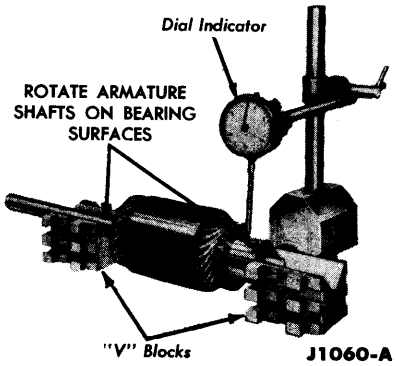

FIG. 13—Commutator Runout Check

ASSEMBLY

1. Install the terminal screw with insulator washers and terminal nut. Be sure to position the slot in the screw parallel to the frame end surface.

2. Position the series field coils with the leads in the terminal screw slot, and the shunt coil as shown in Fig. 14.

3. Install the field pole shoes and screws. **As the pole shoe screws are tightened, strike the frame several sharp blows with a soft-faced hammer to seat and align the pole shoes.**

4. Solder all leads using rosin core solder.

5. Position the shunt coil ground lug under the ground brush terminal farthest from the starter terminal (Fig. 14). The other shunt coil lead is soldered to the series field coil lead farthest from the starter terminal.

6. Install the screws that connect the ground brushes to the starter frame.

7. Install the brush end plate making sure that the brush-plate boss is located in the slot in the starter frame. **Do not pinch the brush leads between the end plate and the frame.**

8. Place a thrust washer on each end of the shaft, slide the armature in place, and install the rear end plate with the end plate dowel located in the starter frame slot.

9. Install the through bolts.

10. Install the brushes in their holders being sure to center the brush springs on the brushes.

11. Place the cover band on the starter, and tighten the clamp screw.

12. Install the starter drive.

13. Check the starter operation and no-load current draw.

ARMATURE REPLACEMENT

Remove the starter drive, through bolts, rear end plate, and cover band. **Be sure to remove all burrs from the shaft to prevent scoring the rear end plate bushing.** Remove the armature.

Before installing the new armature, pull the brushes from their holders. Slide in the armature, and install the rear end plate and through bolts. **The end plate dowel must be aligned with the slot in the starter frame.**

Replace the brushes in their holders, and center the brush springs on the brushes. Install the starter drive.

COMMUTATOR TURNING

Check the commutator runout as shown in Fig. 13. If the surface of the commutator is rough or more than 0.002 inch out-of-round, turn it down.

Polish the commutator with #00 or #000 sandpaper to remove all burrs left by the turning operation. Be sure that no copper particles remain on the insulation between the segments. **It is not necessary to undercut the mica on the starter motor commutator.**

BRUSH REPLACEMENT

Replace the starter brushes when they are worn to 5/16 inch in length. Always install a complete set of new brushes.

1. Loosen and remove the cover band.

2. Remove the 2 through bolts from the starter frame.

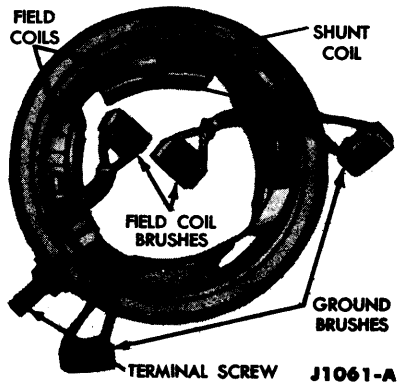

FIG. 14—Field Coil Assembly

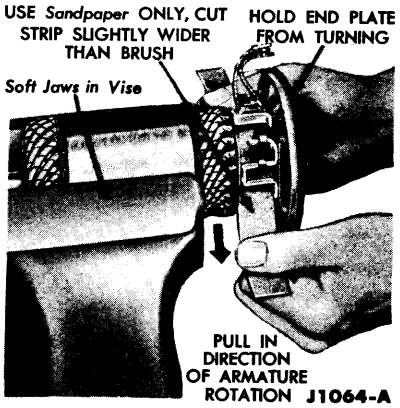

FIG. 15—Starter Brush Seating

3. Remove the brushes from their holders.

4. Remove the brush end plate and the armature rear end plate assembly.

5. Unsolder the brush leads from the field coils.

6. Unscrew the ground brush terminal screws, and remove the ground brushes.

7. Clean the carbon and dirt from the brush end plate. Replace the brush end plate if the insulation between the field brush holder and the end plate is cracked or broken.

8. Make sure that the new brushes slide freely in the holders. Seat the new brushes by sanding (Fig. 15).

9. Solder the new field brushes to the field coils.

10. Position the shunt coil ground lug under the ground brush terminal closest to the starter terminal. Connect the new ground brushes to the starter frame with the terminal screws.

11. Install the brush end plate.

12. Slide the armature rear end plate assembly in place. **Make sure that the locating boss in the brush end plate and the dowel in the rear end plate are located in the slots in the starter frame.**

13. Install the 2 through bolts in the starter end plates.

14. Place the brushes in their holders. Be sure to center the brush springs on the brushes.

15. Install the cover band and tighten the clamp screw.

4 STARTER DRIVE

The starter drive is the "Folo-Thru" type shown in Fig. 16. **The "Folo-Thru" drive is serviced only as a complete unit, because of the calibration requirements on the lock pin and anti-drift pin springs.**

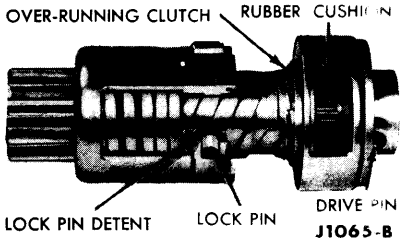

FIG. 16—"Folo-Thru" Starter Drive

REMOVAL AND INSTALLATION

To remove the "Folo-Thru" drive, place the end of the drive in a vise, with the shoulder of the drive tight against the end of the vise jaws (Fig. 17). Press down on the end of the starter to compress the rubber cushion. This exposes the lower end of the drive pin, which may be driven out from above (Fig. 17).

To install the drive assembly, place the end of the drive in a vise, with the shoulder of the drive tight against the end of the vise jaws (Fig. 18). Position the starter shaft in the drive so that the drive pin holes are aligned. Lift up on the outer end of the starter to compress the rubber cushion and expose the drive pin hole. Install the drive pin.

CLEANING AND INSPECTION

A sticking starter drive can be cleaned in kerosene. Use a brush to remove grease and dirt from the worm threads until all grit is removed. **Do not oil the starter drive. It should work freely after cleaning in kerosene and wiping dry.**

The "Folo-Thru" drive has a lock pin which holds the pinion from rotating when it is in the extended position. Once the pin has dropped into place, it will not disengage unless the starter is mounted on the car and the engine speed reaches 310-390 rpm. It cannot be forced out of position by hand.

Inspect the pinion for burrs and broken or badly worn teeth. Check the action of the pinion on the worm threads. It should slide freely on the threads. Check the drive spring to see if it is cracked, broken, or the end tangs are bent. If any of the pinion teeth are badly worn, burred or broken, it will be necessary to replace the drive.

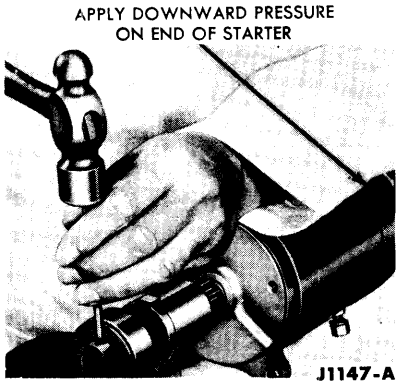

FIG. 17—Starter Drive Removal

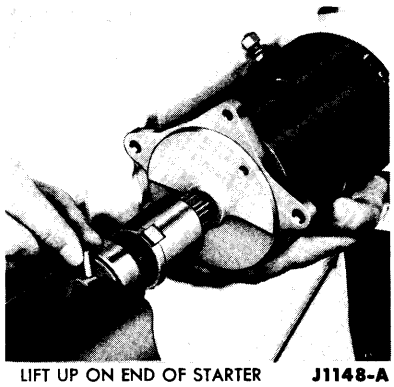

FIG. 18—Starter Drive Installation

PART 9-3 SPECIFICATIONS

GENERATOR

Field Current Draw @ 12 Volts (Amperes)	Maximum Commutator Runout (Inches)	Watts	Gen. rpm Charge Starts*	Maximum Charging Rate		Brushes		
				Amperes	Generator Speed (rpm)*	No.	Original Length (Inches)	Spring Tension (Ounces)
1.5-2.0	0.002	525	1460	35	2670	2	⅞	20-26
1.5-2.0	0.002	600	1550	40	2650	2	⅞	20-26

External Circuit Resistance (generator armature terminal to battery positive terminal) 0.7 Volt Maximum @ 30 Amperes.
*To find the equivalent engine rpm. divide the crankshaft pulley diameter by the generator pulley diameter, and multiply by the generator rpm.

REGULATOR

Current Rating (Amperes)	35	40
Cut-In Voltage	12.4-13.2	
Voltage Regulation @ 75°F.	14.6-15.4	
Current Regulation (Amperes)	33-38	38-42

VOLTAGE REGULATION SETTING VERSUS AMBIENT AIR TEMPERATURE

Ambient Temperature °F.	Voltage Regulation Setting (Volts)
25	15.1-15.9
35	15.0-15.8
45	14.9-15.7
55	14.8-15.6
65	14.7-15.5
75	14.6-15.4
85	14.5-15.3
95	14.3-15.1
105	14.2-15.0
115	14.1-14.9
125	13.9-14.7
135	13.8-14.6
145	13.6-14.4

ALLOWABLE BATTERY FAST CHARGE TIME (Domestic Only)

Specific Gravity	Maximum Fast Charge Time
Below 1.150	1 hour
1.150 to 1.175	¾ hour
1.175 to 1.200	½ hour
1.200 to 1.225	¼ hour
Above 1.225	Slow Charge Only

STARTER MOTOR

Current Draw Under Load (Amperes)	Normal Engine Cranking Speed (rpm)	Minimum Stall Torque @ 5 Volts (Foot-Pounds)	Maximum Load (Amperes)	No Load Amperage	Maximum Commutator Runout (Inches)
155-190	150-180	15.5	670	70	0.002

STARTER BRUSHES

Minimum Mfg. Length (Inches)	Wear Limit (Inches)	Brush Spring Tension (Ounces)	No. Used
0.43-0.46	0.25	48.58	4

BATTERY FREEZING TEMPERATURES

Specific Gravity	Freezing Temp.
1.280	− 90°F.
1.250	− 62°F.
1.200	− 16°F.
1.150	+ 5°F.
1.100	+ 19°F.

ALLOWABLE FAST CHARGE TIME (Domestic Only)

Specific Gravity	Maximum Fast Charge Time
1.150 or less	1 hour
1.150 to 1.175	¾ hour
1.175 to 1.200	½ hour
1.200 to 1.225	¼ hour
Above 1.225	Slow Charge Only

BATTERY (12 VOLTS)

Original Equipment			
Filler Cap Color	Plates	Amp. Hours	Ground
Gray	78	65	Negative
Yellow	66	70	

1962 FORD THUNDERBIRD SHOP MANUAL

GROUP 10

LIGHTS, INSTRUMENTS AND ACCESSORIES

PAGE

PART 10-1 LIGHTING SYSTEM, HORNS, AND INSTRUMENTS . . 10-2

PART 10-2 RADIO AND HEATER 10-11

PART 10-3 AIR CONDITIONING 10-17

PART 10-4 SPECIFICATIONS 10-34

PART 10-1 LIGHTING SYSTEM, HORNS, AND INSTRUMENTS

Section		Page
1	Trouble Shooting	10-2
2	Lighting System	10-3
3	Horns	10-8
4	Instruments	10-8

1 TROUBLE SHOOTING

Problems of the lighting, horn, and indicator systems are covered in one of the following trouble diagnosis guides. These guides list many of the sources of trouble encountered in the electrical systems. The items listed are not in the order of probable occurrence. Individual circumstances and experience will dictate which items to check first.

LIGHT TROUBLE DIAGNOSIS GUIDE

ALL HEADLIGHTS DO NOT LIGHT	**1.** Loose battery cable. **2.** Loose quick disconnect or broken wire from the battery to the headlight switch (Fig. 1). **3.** Defective headlight switch (page 10-6). **4.** Disconnected or broken wire from the headlight switch to the beam selector switch.	**5.** Defective beam selector switch. **6.** All headlight bulbs burned out. This may be caused by a defective or improperly adjusted generator voltage regulator (Group 9).
INDIVIDUAL LIGHTS DO NOT LIGHT	**1.** Burned out bulb. **2.** Loose or broken wires to the bulb.	**3.** Poor ground.
LIGHTS BURN OUT REPEATEDLY	**1.** Loose or corroded electrical connections. **2.** Excessive vibration.	**3.** Improperly adjusted or defective generator voltage regulator (Group 9).

HORN TROUBLE DIAGNOSIS GUIDE

HORNS DO NOT SOUND	**1.** Loose connections at horn button contact. **2.** Open wire (blue-yellow stripe) to horn button. **3.** Open wire (black-yellow stripe) to horn relay.	**4.** Inoperative relay. **5.** Horns defective or out of adjustment.
ONE HORN FAILS TO OPERATE	**1.** Broken or loose wire to the horn.	**2.** Horn defective or out of adjustment.
HORNS OPERATE CONTINUOUSLY	**1.** Shorted wire to horn button (blue-yellow stripe).	**2.** Shorted relay.

INSTRUMENT TROUBLE DIAGNOSIS GUIDE

OIL PRESSURE INDICATOR LIGHT INOPERATIVE	**1.** Indicator bulb burned out. **2.** Loose or broken wire from the light to the indicator switch.	**3.** Defective oil pressure indicator switch (page 10-9).
CHARGE INDICATOR LIGHT INOPERATIVE	**1.** Burned out bulb. **2.** Loose, broken, or shorted wires to the armature terminal of the voltage regulator and/or generator.	**3.** Generator armature not grounded **4.** Generator regulator malfunction.

CONTINUED ON NEXT PAGE

INSTRUMENT TROUBLE DIAGNOSIS GUIDE (Continued)

FUEL GAUGE ERRATIC OR INOPERATIVE	1. Loose or broken wire from the constant voltage regulator to the fuel gauge. 2. Defective fuel gauge (page 10-9). 3. Loose or broken wire from fuel gauge to the fuel tank sending unit.	4. Defective radio suppression choke. 5. Defective constant voltage regulator. 6. Defective fuel tank sending unit. 7. Poor ground between fuel tank and body.
TEMPERATURE GAUGE ERRATIC OR INOPERATIVE	1. Loose or broken wire from constant voltage regulator to the temperature gauge. 2. Defective temperature gauge (page 10-9). 3. Loose or broken wire from the temperature sending unit to the temperature gauge.	4. Defective temperature sending unit. 5. Defective constant voltage regulator. 6. Defective radio suppression choke.
BOTH FUEL AND TEMPERATURE GAUGES ERRATIC	1. Loose or corroded constant voltage regulator ground. 2. Defective constant voltage regulator (page 10-9). 3. Defective radio suppression choke.	4. Broken or loose wire from or to the constant voltage regulator. 5. Defective ignition switch.

TURN INDICATOR DIAGNOSIS GUIDE

TURN INDICATOR LIGHTS INOPERATIVE	1. Burned out fuse. 2. Loose or broken wire from ignition switch to flasher. 3. Defective flasher. 4. Loose or broken wire from flasher to turn indicator switch.	5. Defective turn indicator switch. 6. Broken or lose wires from switch to lights. 7. Burned out bulbs, or loose sockets.
TURN INDICATOR LIGHTS OPERATE INCORRECTLY	1. Loose or broken wires from switch to light.	2. Defective indicator switch. 3. Defective flasher.
TURN INDICATOR CANCELS IMPROPERLY	1. Cam improperly positioned on steering wheel hub.	2. Coil spring on switch plate assembly loose or weak.

2 LIGHTING SYSTEM

Four sealed-beam headlights are used. The two outboard lights have two filaments each for low beam and high beam, and are marked by a numeral "2" molded in the glass lens. Locating tabs molded in the glass allow the mounting of the No 2 lights in the outboard headlight support frames only. The low beams are used for city driving, when meeting oncoming traffic on the highway, and for No. 2 headlight alignment.

The inboard headlights with a numeral "1" molded in the glass lens have only one filament and are used for highway driving along with the high beams of the No. 2 headlights. Locating tabs molded in the glass allow the mounting of the No. 1 lights in the inboard headlight support frames only. A conventional beam control switch is located on the floor board near the left.

Quick disconnect terminals are provided at the left and right of the radiator support assembly. The terminals are color coded. Like colored terminals are connected together. The green wire with a black stripe supplies current to the headlight high beams. The red wire with a black stripe supplies the low beam filaments. The black wire with a yellow stripe supplies the parking lights (Fig. 1).

Wiring diagrams are presented in Figs. 1 and 2. Assembly and disassembly operations are illustrated when it is necessary to show details or changes in procedure.

HEADLIGHT ALIGNMENT

All headlight adjustments are to be made with a full fuel tank, an empty car and recommended pressure in all tires. Before each adjustment, bounce the car by pushing on the center of both the front and rear bumpers, to level the car.

To align the No. 1 headlights (inboard lights) by means of a wall screen, select a level portion of the

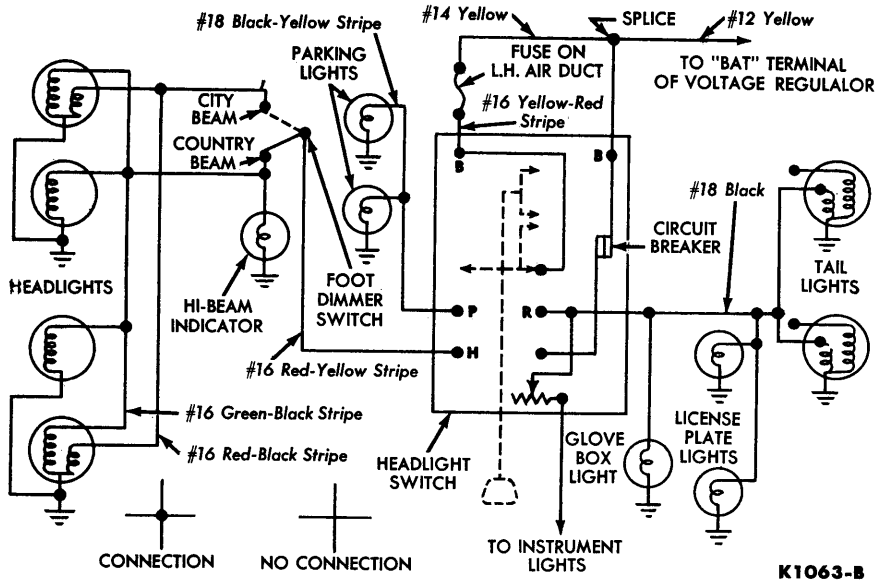

FIG. 1—Headlight Circuit Diagram

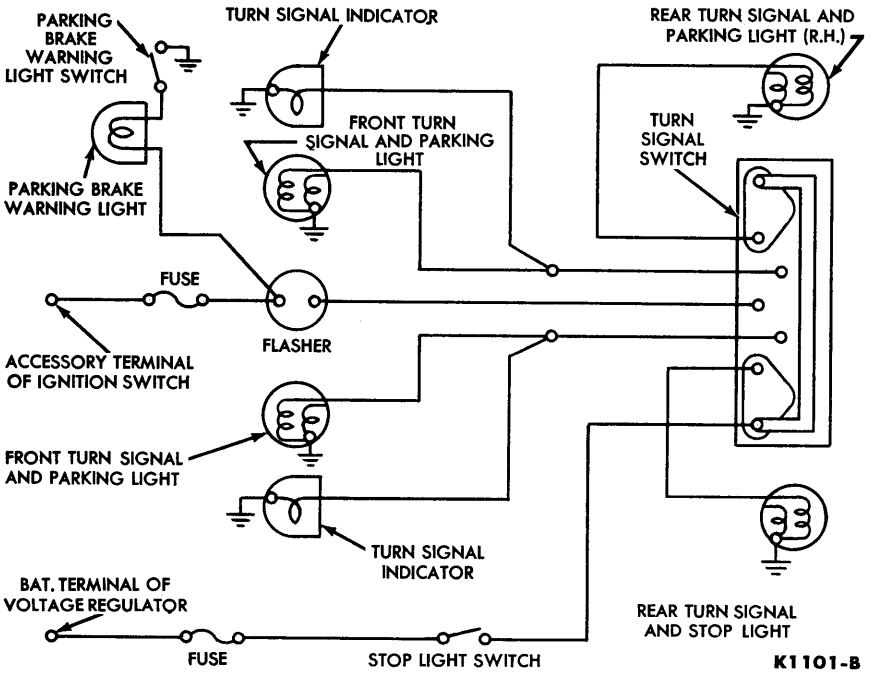

FIG. 2—Turn Signal and Parking Brake Warning Light Circuit

shop floor. Lay out the floor and wall as shown in Fig. 3.

Establish the headlight horizontal centerline by subtracting 20 inches from the actual measured height of the headlight lens center from the floor and adding this dimension (dimension "B," upper diagram Fig. 4) to the 20-inch reference line obtained by sighting over the uprights. Draw a horizontal line 2 inches below, and parallel to, the headlight horizontal centerline. Then draw the headlight vertical centerlines on the screen as measured on the car (dimension "A," upper diagram Fig. 4).

NO. 1 HEADLIGHT ADJUSTMENT (INNER LIGHTS)

Adjust each No. 1 headlight (inner light) beam as shown in Fig. 4. **Cover the No. 2 lights when making this adjustment.**

NO. 2 HEADLIGHT ADJUSTMENT (OUTER LIGHTS)

To align the No. 2 headlights (outer lights), a different wall chart (lower diagram Fig. 4) is used. Dimension "B" for the No. 2 lights is the same as "B" for the No. 1 lights, dimension "A" is as measured on the car. **Note that the line of adjustment of the No. 2 lights is the horizontal centerline of the No. 2 lights.** Turn the headlights to low beam and adjust each No. 2 light as shown in Fig. 4.

Each headlight is adjusted by means of two screws located under the headlight trim ring as shown in Fig. 5. Always bring each beam into final position by turning the adjusting screws clockwise so that the headlights will be held against the tension springs when the operation is completed.

NOTE: **Some states may not approve of the 2-inch dimension for the No. 1 headlights. Check the applicable state law, as a 3-inch dimension may be required.**

BULB REPLACEMENT

HEADLIGHTS

1. Remove the retaining screws and headlight trim ring.

2. Loosen the retaining ring screws (Fig. 5), rotate the retaining ring counter-clockwise, and remove it.

3. The headlight bulb may now be pulled forward far enough to disconnect the wiring assembly plug.

4. Plug in the new bulb, and place it in position, making sure that the locating tabs are placed in the positioning slots.

5. Install the headlight bulb retaining ring, rotating it clockwise under the screws, and tighten the screws.

6. Place the trim ring into position, and install the mounting screws.

PARKING LIGHT

To replace the bulb in the parking light, remove the retaining screws, lens, and bulb (Fig. 6). After the bulb is replaced, install the lens and retaining screws.

TAIL AND STOP LIGHT, AND LICENSE PLATE LIGHTS

The tail and stop light are shown disassembled in Fig. 7. To replace the bulb, remove the retaining screws, and lens.

Two lights illuminate the license plate. The bulb and socket assembly snaps into the bezel and lens assembly that mounts on a bracket bolted to the bumper guard (Fig. 8).

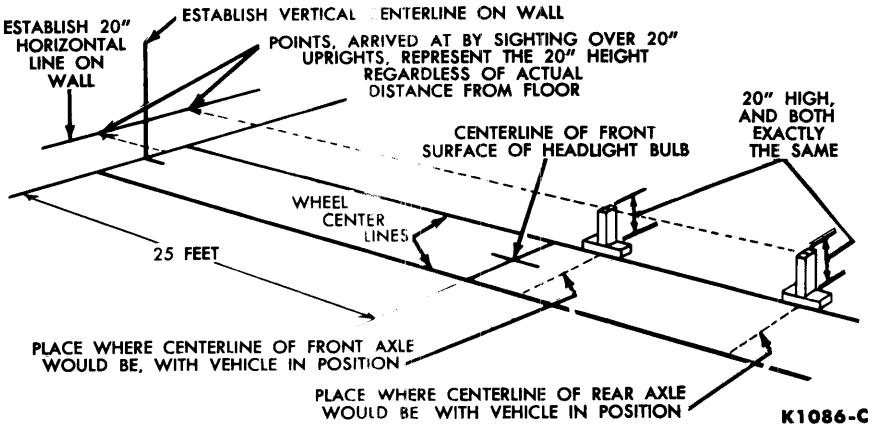

FIG. 3—Floor and Wall Layout

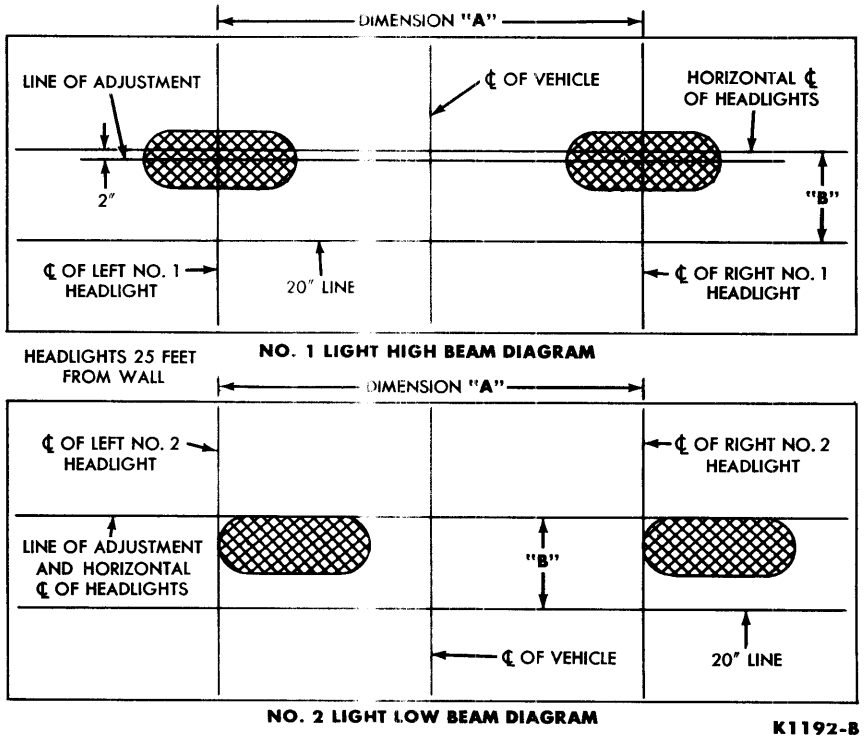

FIG. 4—Headlight Wall Screens

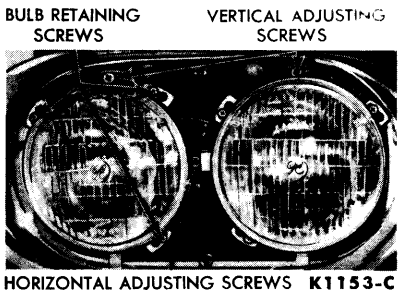

FIG. 5—Headlight Adjustment

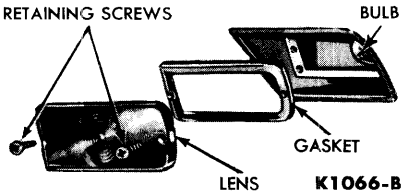

FIG. 6—Disassembled Parking Light

DOME LIGHT

Remove the two screws retaining the dome light lens and bezel. Remove the lens and bezel then replace the bulb.

ASH TRAY AND GLOVE BOX LIGHT

One light illuminates both the ash tray and glove box. The bulb and socket assembly mounts on the forward face of the glove box. Remove the ash tray and replace the bulb.

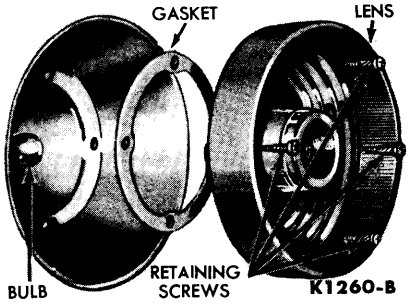

FIG. 7—Disassembled Tail and Stop Light

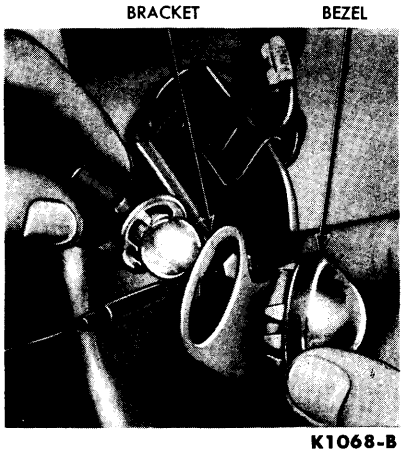

FIG. 8—License Plate Light

MAP LIGHT

The map light is shown in Fig. 9. Remove the screws retaining the radio access door. Lower the radio access door and replace the bulb.

INSTRUMENT LIGHTS

On units equipped with the movable steering column, the instrument panel light bulbs can be replaced by pulling out the individual light sockets from the rear of the panel (Fig. 10). Access to the sockets can be

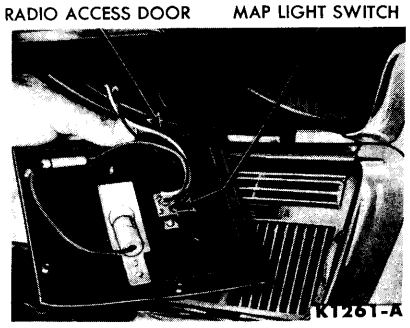

FIG. 9—Map Light

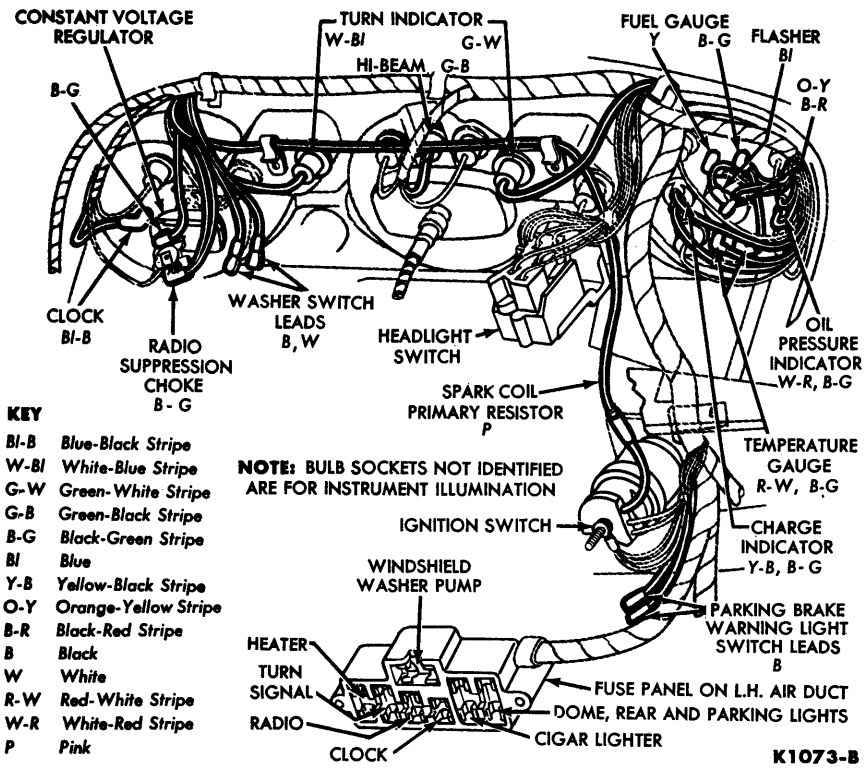

FIG. 10—Instrument Panel Wiring

made through the openings on the underside of the panel, adjacent to the steering column.

On standard steering equipped units, the bulbs can be replaced by removing one of the three instrument clusters (gauges, speedometer and clock) in front of the inoperative bulbs. Remove the screw retaining the chrome trim ring on the instrument cluster. Remove the trim ring and instrument retaining screws. Pull the instrument away from the panel and replace the bulbs.

SWITCHES

Illustrated procedures for the replacement of the headlight switch, beam-control switch, stop light switch, dome light switch, and ignition switch are given here.

HEADLIGHT AND BEAM SELECTOR SWITCH TESTS

The following tests may be made to determine whether a headlight switch or a beam selector switch is defective.

Set the headlight switch to the headlight position, and operate the beam selector switch. If none of the headlights turn on when the beam selector switch is operated, yet the instrument panel lights operate, the headlight switch or the red-yellow stripe wire from the headlight switch to the beam control switch is probably defective. Substitute a known good switch for the suspected switch to determine whether the switch or the wiring is at fault.

If the headlights operate only with the beam control switch in one position, the switch or the wiring from the switch to the headlight is defective. Substitute a known good switch for the suspected switch to determine whether the switch or the wiring is at fault.

Before removing any switch, disconnect a battery cable from one of the battery terminals.

HEADLIGHT SWITCH

1. Remove the control knob and shaft by pressing the knob release button on the switch housing, with the knob in the OFF position. Turn the shaft slightly, and pull it out of the switch.

2. Unscrew the mounting nut, remove the bezel and switch, and disconnect the moulded terminal.

3. To install the switch, connect the moulded terminal, install the holding clamp, insert the switch in the instrument panel, and install the bezel and mounting nut.

4. Install the knob and shaft assembly by inserting it all the way into the switch until a distinct click is heard. In some instances it may be necesary to rotate the shaft slightly until it engages the switch-contact carrier.

Figure 11 identifies the terminals on the headlamp switch assembly.

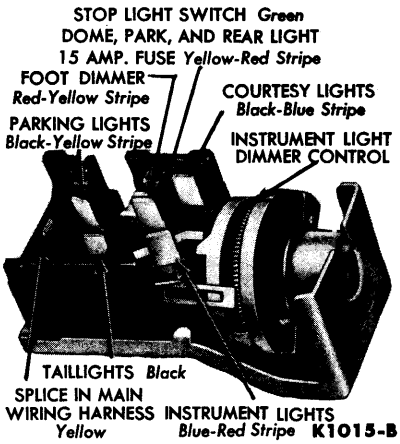

FIG. 11—Headlight Switch, Dome Light Switch, and Circuit Breaker Assembly

HEADLIGHT BEAM CONTROL SWITCH

Lay the floor mat back from the area of the switch, and remove the mounting plate screws (Fig. 12). Remove the switch from the mounting plate, and disconnect the wire terminal block from the switch.

To install the switch, connect the terminal block to the switch, mount the switch on the mounting plate, and install the plate and switch to the floor. Replace the floor mat.

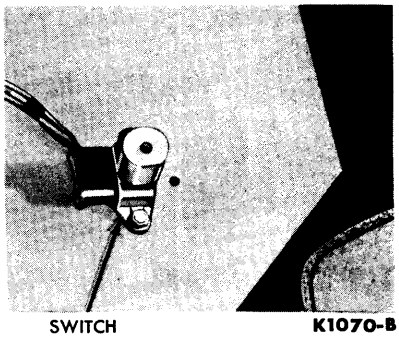

FIG. 12—Headlight Beam Control Switch

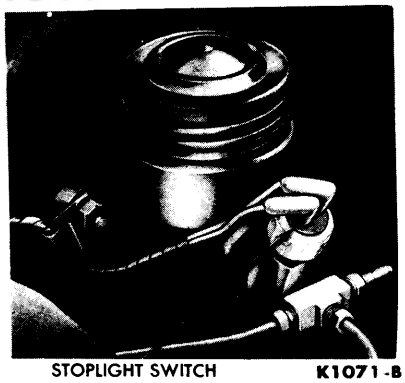

STOPLIGHT SWITCH K1071-B

FIG. 13—Stop Light Switch

STOP LIGHT SWITCH

Disconnect the wires at the bullet connectors, and unscrew the switch from the master cylinder (Fig. 13).

DOME LIGHT SWITCH

The dome light switch is a part of the headlight switch. It is actuated by rotating the switch control knob to the maximum counterclockwise position. The dome light and headlight switch is replaced as a unit.

MAP LIGHT SWITCH

Remove the radio access door retaining screws (Fig. 9). Lower the radio access door, disconnect the wires at the bullet connectors and remove the switch retaining screws.

Figure 14 shows the dome and map light wiring circuit.

IGNITION SWITCH AND LOCK CYLINDER

1. Disconnect the negative cable from the battery.

2. Turn the ignition key to the accessory position. Slightly depress the pin shown in Fig. 15, turn the key counterclockwise, and pull the key and lock cylinder out of the switch assembly. If only the lock cylinder is to be replaced, proceed to step 8.

3. Press in on the rear of the switch and rotate the switch ⅛ turn counterclockwise (as viewed from the terminal end). Remove the bezel and switch.

4. Remove the insulated plug and wires from the rear of the switch.

5. If a new ignition switch as well as the lock cylinder is to be installed, insert a screwdriver into the lock opening of the ignition switch and turn the slot in the switch to a full counterclockwise position.

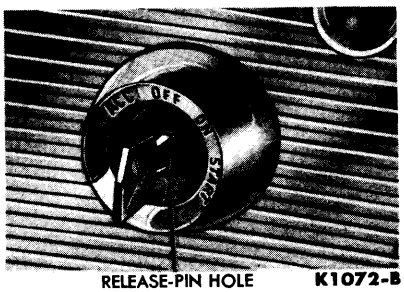

RELEASE-PIN HOLE K1072-B

FIG. 15—Ignition Switch and Lock

6. Connect the insulated plug and accessory wires to the back of the ignition switch.

7. Place the switch in the switch opening, press the switch toward the instrument panel, and install the bezel.

8. If a new lock cylinder is to be installed, insert the key in the cylinder and turn the key to the accessory position. Place the cylinder and key in the ignition switch, depress the pin slightly (Fig. 15), and turn the key counterclockwise. Push the lock cylinder into the switch. Turn the key to check the lock cylinder operation.

9. Connect the battery cable and check the ignition switch operation.

CIRCUIT BREAKER AND FUSES

A combination headlight switch, dome light switch and circuit breaker is used. One circuit breaker, an integral part of the headlight switch assembly, protects the headlight circuit. One fuse panel (Fig. 10), mounted on the left-hand air duct contains seven fuses and protects the following circuits:

1. Heater
2. Turn Signal
3. Radio
4. Windshield Washer Pump
5. Clock
6. Cigar Lighter
7. Dome, Map, Rear and Parking Lights

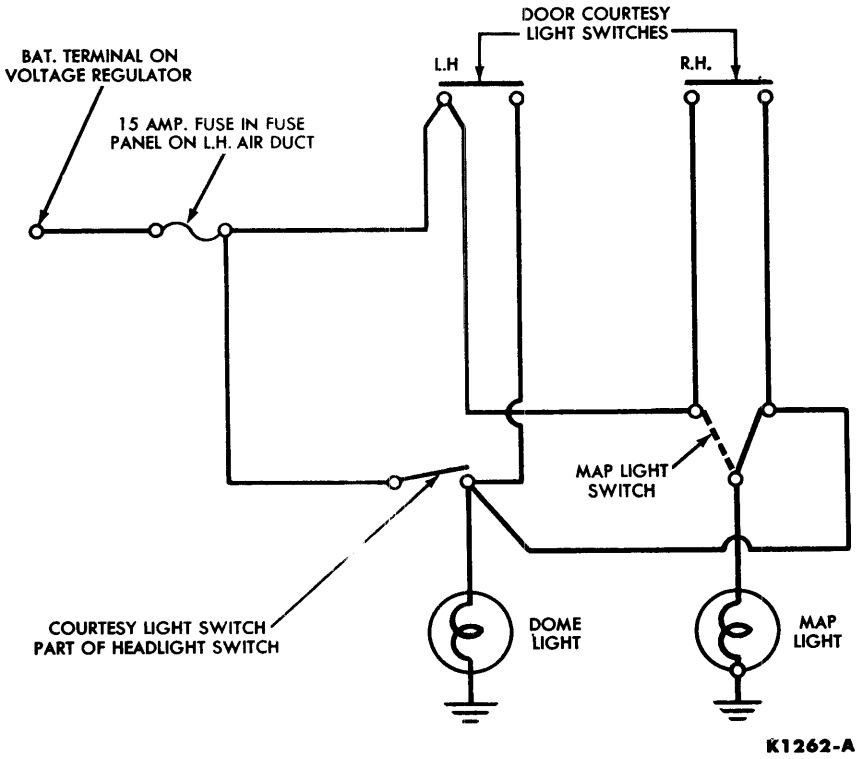

FIG. 14—Dome and Map Light Circuit

3 HORNS

The Thunderbird is equipped with a pair of tuned horns controlled by a relay. The horn button closes the relay contacts, completing the circuit to the horns. One of the horns has a high-pitched tone; the other has a low-pitched tone. The horn circuit is shown in Fig. 16.

TEST AND ADJUSTMENT

The only test necessary on the horns is for current draw. The current adjustment also adjusts the tone of the horn.

CURRENT DRAW TEST

Connect a voltmeter and ammeter to the horn and to a voltage supply as shown in Fig. 17. The normal current draw for one horn at 12 volts is 9.0-10.0 amperes.

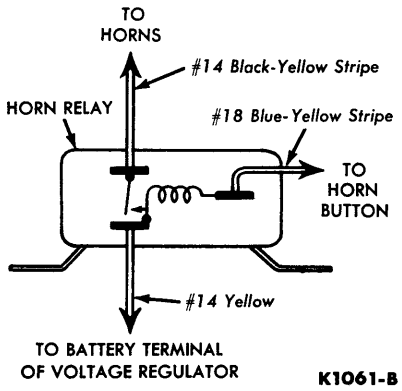

FIG. 16—Horn Circuit

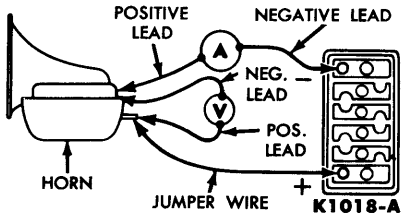

FIG. 17—Horn Current Draw Test

CURRENT ADJUSTMENT

Current is adjusted by changing the contact tension (Fig. 18). Connect the horn as shown in Fig. 17. Turn the tone-adjusting nut until the current is within the limits specified. **Do not attempt to adjust the horn while it is blowing.** If the current oscillates between 9 and 12 amperes, turn the adjusting nut clockwise a small amount. Replace the horn if it can not be adjusted.

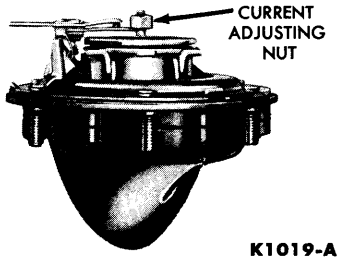

FIG. 18—Horn Adjustment

REPLACEMENT

The horns are mounted in front of the radiator. Remove the horn to horn mounting bracket and stud nuts. Remove the horn from the bracket and disconnect the horn wire at the terminal.

To install, attach the horn wire to the horn terminal, then mount the horn in position.

HORN RING REMOVAL

The horn ring is assembled to the steering wheel. The horn ring contact makes connection with the horn relay wire by means of an insulated sliding contact mounted on a plate which is attached to the end of the steering column. When the horn ring is depressed, the horn ring contact makes connection with ground thus operating the horn relay.

To remove the horn ring, pull off the decorative cover at the center of the steering wheel and remove the wheel from the steering gear shaft.

Removal of the three retaining screws then allows complete disassembly of the remaining parts.

4 INSTRUMENTS

This section contains information on the various units in the instrument cluster assembly. A wiring diagram showing the connections of the gauges and lights is shown in Fig. 10.

The instrument cluster includes a charge indicator light, fuel gauge, temperature gauge, oil pressure indicator light, speedometer, and an electric clock. A gauge voltage regulator maintains a constant voltage supply to the fuel gauge and temperature gauge circuits. There is a radio suppression choke connected in series with the constant voltage regulator supply wire. All of the instruments are electrically operated except the speedometer. Illumination is provided by ten lights controlled by a rheostat on the lighting switch.

It is not necessary to remove the entire instrument cluster in order to remove the individual instruments. To remove any instrument, remove the screw retaining the chrome trim ring on one of the three clusters (gauges, speedometer and clock) with the inoperative instrument. Remove the trim ring and the instrument retaining screws. Pull the instrument away from the panel and disconnect the wires or cables. The instrument constant voltage regulator is attached to a bracket mounted near the clock (Fig. 10). Remove the clock in order to gain access to the regulator.

When installing an instrument, follow the color coding as shown in Fig. 10 for attaching the wiring or installing the panel lights.

The fuel tank sending unit is attached to the fuel tank by a retaining ring.

The sending unit is accessible through a covered opening under the center of the luggage compartment floor mat.

CHARGE INDICATOR LIGHT

A generator charge indicator light is used. This light flashes on if the battery is discharging and the generator is not supplying current.

To test the charge indicator light, turn the ignition switch on with the engine stopped. The light should come on. If it does not, the light is either burned out or the wiring to the light is defective. Fig. 19 shows the charge indicator light circuit.

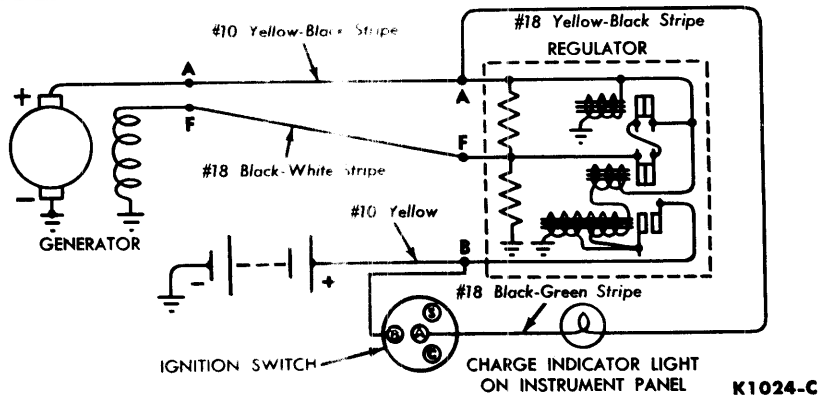

FIG. 19—Generator Charge Indicator Light Circuit

OIL PRESSURE INDICATOR LIGHT

The Thunderbird is equipped with an indicator light which flashes on when the oil pressure is below a safe value. The light should come on when the ignition switch is first turned on, and it should go out when the engine is started. The light is connected between the oil pressure switch unit and the "COIL" or "IGN" terminal of the ignition switch.

INDICATOR LIGHT TEST

To test the indicator light, turn on the ignition switch. Do not start the engine. The light should come on. Start the engine. The light should go out, indicating that the oil pressure has built up to a safe value.

To test the oil pressure switch on the engine, turn the ignition switch on (engine not running), the indicator light should come on. If the indicator light does not come on, short the terminal of the oil pressure switch unit to ground (Fig. 20). If the light now comes on, the oil pressure switch is defective. If the light still does not come on, the bulb is burned out or the wires from the bulb to the ignition switch and oil pressure switch are defective.

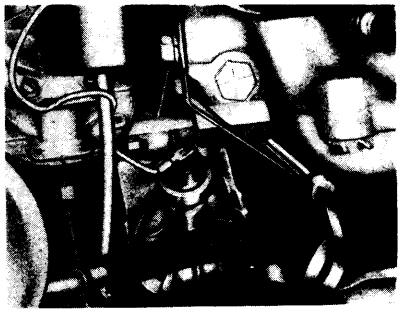

FIG. 20—Oil Pressure Switch Mounting

OIL PRESSURE SWITCH REPLACEMENT

1. Disconnect the oil pressure sending unit wire at the unit (Fig. 20).
2. Remove the oil pressure sending unit from the engine.
3. Apply sealing compound to the threads of the new oil pressure sending unit and install it. Tighten to 10-15 ft-lbs torque.
4. Connect the wire to the oil pressure sending unit.
5. Check the operation of the unit.

FUEL GAUGE AND TEMPERATURE GAUGE

The voltage regulator (Fig. 21) used with the fuel and temperature gauges maintains an average value of 5.0 volts at the gauge terminals. The regulator is temperature compensated for all expected ambient (surrounding air) temperatures, and is not adjustable.

CONSTANT VOLTAGE REGULATOR TEST

Turn the ignition switch ON. Check for voltage at the gauge feed wire (black with green band) at one of the gauges. The voltage should oscillate between zero and about 10 volts. If it does not, the constant voltage regulator is defective, the radio suppression choke is defective, or there is a short to ground between the voltage regulator and the gauges.

FUEL GAUGE

The fuel gauge consists of a sending unit, located on the fuel tank, and a remote register unit (fuel gauge) mounted in the instrument cluster.

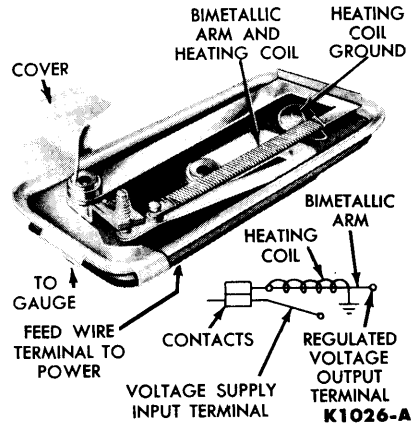

FIG. 21—Gauge Voltage Regulator and Circuit

The fuel gauge circuit is shown in Fig. 22.

Fuel Gauge System Test. The method presented for testing the fuel gauge unit can also be used to check the temperature gauge unit. The gauge unit test will determine the accuracy of the gauge unit.

Gauge Unit Test. Place the ignition switch in the off position, and connect the terminals of two, series connected, flashlight cells to the gauge terminals. The three volts should cause the gauge to read approximately full scale.

Sending Unit Test. The sending unit can be tested by first making a gauge unit test to determine the accuracy of the instrument panel gauge unit. If the gauge unit is inaccurate or does not indicate, replace it with a good unit. If the gauge unit still indicates improperly or is erratic in its operation, the sending unit or wiring to the sending unit is faulty.

If the fuel gauge unit indicates improperly and at the same time the temperature gauge indicates improperly and in the same direction, the constant voltage regulator could be defective, as it supplies both gauges.

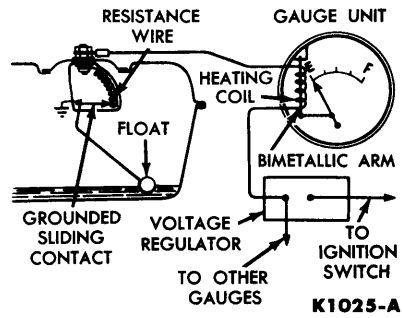

FIG. 22—Fuel Gauge Circuit

TEMPERATURE GAUGE

The temperature gauge consists of a sending unit mounted in the cylinder head, and a remote register unit, (temperature gauge) mounted on the instrument panel. The temperature gauge circuit is shown in Fig. 23.

Gauge Unit Test. Perform the same test as that described for the fuel gauge. The temperature gauge pointer should read approximately full scale. This test will determine the accuracy of the instrument panel gauge unit.

Sending Unit Test. The sending unit can be tested by first making a gauge unit test to check the accuracy of the gauge unit. Start the engine and allow it to warm up to normal temperature. If no reading is indicated on the gauge, check the sending unit to gauge wire by removing the wire from the sending unit and momentarily grounding the wire. If the gauge still does not indicate, the wire is defective. Repair or replace the wire. If the gauge now indicates, the sending unit is faulty.

If the temperature gauge unit indicates improperly and at the same time the fuel gauge indicates improperly and in the same direction, the constant voltage regulator could be defective, as it supplies both gauges.

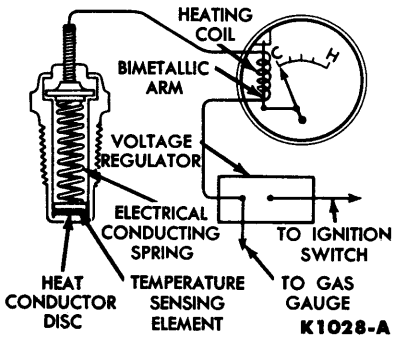

FIG. 23—Temperature Gauge Circuit

SPEEDOMETER

The speedometer is connected to the output shaft of the transmission by means of a flexible shaft, and a drive gear located inside the transmission. The flexible shaft drives the speedometer which registers speed in miles per hour and also drives an odometer which records distance traveled in miles and tenths of a mile.

SPEEDOMETER TESTS

To test the odometer accuracy, drive the vehicle over a "measured mile." Speedometer accuracy can be checked by comparing the speedometer in question against one known to be accurate, while two vehicles are moving at the same speed, or by timing the vehicle on a "measured mile."

Most cases of speedometer inaccuracy are due to a change to nonstandard tire sizes without changing the speedometer drive gear ratio. The standard tire is 8:00 x 14. The speedometer drive gear has 8 teeth. The driven gear has 18 teeth.

REMOVAL AND REPLACEMENT

Remove the screw retaining the chrome trim ring and remove the ring. Remove the mounting screws, and pull the speedometer far enough from the instrument panel to disconnect the speedometer cable and remove the pilot lights.

Make certain that all the pilot lights are secure in their mounting holes when installing the speedometer. The top pilot light is the high beam indicator (green with black band Fig. 10).

SPEEDOMETER CABLE REPLACEMENT

To replace the speedometer drive cable, disconnect the cable housing at the speedometer, and pull the cable out of the housing. Lubricate the new cable with cable lubricant B5A-19581-A and insert it all the way into the housing, and twist it slightly to make sure that the squared drive is engaged in the speedometer driven gear. The housing is fastened to the transmission as shown in Fig. 24. **If a speedometer cable is broken, it will be necessary to disconnect both ends of the cable housing in order to remove the broken sections.** The speedometer driven gear is held on to the speedometer shaft casing by a retainer clip. When replacing the driven gear, make certain that the gear is secure by placing the gear in position before inserting the retainer clip through the gear slots.

SPEEDOMETER CABLE LUBRICATION

Follow the procedure for speedometer cable replacement. Wipe off all of the old lubricant from the cable before applying new lubricant. Apply cable lubricant B5A-19581-A sparingly to the entire length of the cable.

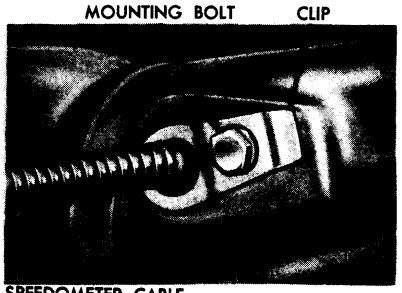

FIG. 24—Speedometer Cable Mounting

PART 10-2 RADIO AND HEATER

Section		Page
1	Radio and Heater Trouble Diagnosis	10-11
2	Radio	10-12
3	Heater	10-14

1 RADIO AND HEATER TROUBLE DIAGNOSIS

The procedures given cover only minor radio receiver troubles. Each procedure either locates the minor trouble or determines that the receiver should have a major repair

The following parts will be required to make the radio trouble shooting tests.

Spare Fuses (7.5 ampere)

Antenna and lead

Speaker

Suppression Equipment (Complete Set)

Pre-test and mark all of the test parts so that these known good parts will not be left in a tested receiver.

RADIO TROUBLE DIAGNOSIS GUIDE

NO RECEPTION	**1.** Burned out fuse **2.** Reversed battery polarity **3.** Defective antenna **4.** Shorted speaker lead or defective speaker Be sure that proper voltage is available at the set then substitute the known good antenna and speaker.
NOISY OR ERRATIC RECEPTION	**NOISY RECEPTION—ENGINE NOT RUNNING** **1.** Loose connections **NOISY RECEPTION—ENGINE RUNNING** **1.** Defective suppression equipment. **2.** Suppression condensers not properly grounded. **3.** Receiver not properly grounded to instrument panel. **NOISY RECEPTION—CAR IN MOTION** **1.** Loose or broken lead-in cable. **2.** Loose or defective radio antenna. **3.** Defective wheel static collectors.
DISTORTED OR GARBLED SOUND	**1.** Voice coil rubbing on center pole piece of speaker magnet. **2.** Torn speaker cone. **3.** Foreign material on cone. **4.** Bent or twisted speaker mounting.
WEAK RECEPTION	**1.** Poor adjustment of the antenna trimmer (rear mounted antenna only). **2.** Defective antenna.

CONTINUED ON NEXT PAGE

HEATER TROUBLE DIAGNOSIS GUIDE

INSUFFICIENT OR NO HEAT	**1.** Burned out fuse or loose wires to the heater blower. **2.** Defective motor ground. **3.** Fan loose on motor shaft or motor stalled. **4.** Defective heater blower switch. **5.** Defective blower motor. **6.** A kinked, clogged, or collapsed water hose. **7.** Improperly connected or wrong	size heater hoses. **8.** Plugged heater core. **9.** Improperly installed or defective engine thermostat. **10.** Incorrectly installed and adjusted control cables. **11.** Defective thermostat water valve. **12.** Air leaks in the ventilation system.
INSUFFICIENT OR NO DEFROSTING	**1.** Improperly adjusted defroster control cable. **2.** Disconnected defroster hose. **3.** Binding defroster valve.	**4.** Plugged or loose defroster nozzle. **5.** Obstructed defroster openings at windshield.
TOO MUCH HEAT	Check for an incorrectly adjusted or malfunctioning thermostat water valve.	

2 RADIO

GENERAL INFORMATION

A pictorial diagram showing the radio connections is shown in Fig.1.

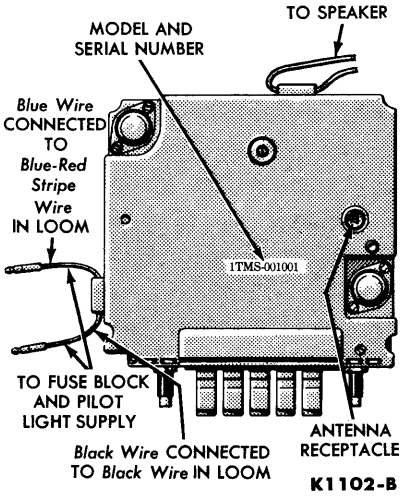

FIG. 1—Radio Wiring Connections

MODEL IDENTIFICATION

The model number (1TMS) identifies the manufacturer (Motorola), and is the prefix to the serial number stamped on the top of the radio (Fig. 1). The radio is completely transistorized.

RADIO CONTROLS

Tuning is controlled by five push buttons and by the tuning knob to the right of the radio. The radio is turned on and off, and the volume and tone are controlled by the dual knob to the left side of the dial.

CHASSIS MOUNTINGS

The radio is attached to the instrument panel with two hex nuts and lock washers and by a support screw at the rear center of the set. The speaker is mounted on the center of the horizontal surface of the instrument panel.

CHASSIS CONNECTIONS

The antenna connector, "A" lead, pilot light lead, and speaker lead, connect to the radio as shown in Fig. 1.

RADIO REPLACEMENT

Be sure that the ignition switch is off before starting removal of the radio, so that damage will not result to the power transistors when the speaker is disconnected.

RADIO CHASSIS

1. Remove the speaker grille, and speaker assembly.

2. Remove the control knobs, the two hex mounting nuts and lock washers, the bezel, and the two radio mounting nuts and lock washers.

3. Remove the radio access cover and the radio lower center support screw.

4. Remove the radio through the speaker opening.

5. Disconnect the antenna lead, pilot light lead, and "A" lead, then remove the radio.

When installing the radio, attach the cables and leads before placing the radio in position in the panel. Make certain that the chassis makes good electrical contact with the instrument panel at both support positions. Tighten the mounting nuts and bolts to 25-30 in-lbs torque.

SPEAKER

1. Remove the speaker grille by carefully prying upwards at the edge of the grille farthest from the windshield, to release the push-in type clips. Pull towards the passenger compartment to remove the grille from the panel.

2. Remove the speaker board mounting screws. Remove the speaker assembly and disconnect the speaker leads at the speaker.

3. Connect the speaker leads to the new speaker, with the large pin to the large jack, and the small pin to the small jack.

4. With the speaker jacks on the right side, install the speaker assembly in the opening.

5. Install the speaker grille.

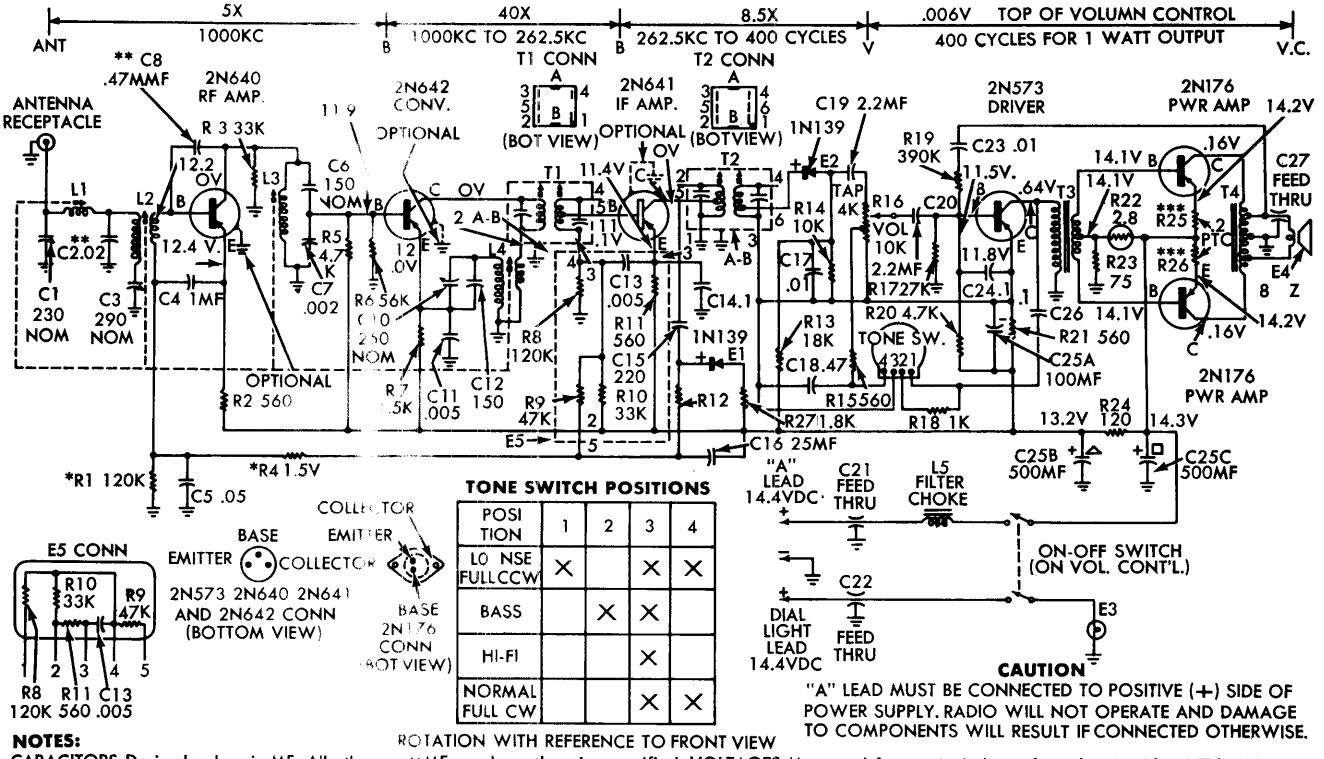

TONE SWITCH POSITIONS

POSITION	1	2	3	4
LO NSE FULL CCW	X		X	X
BASS		X	X	
HI-FI			X	
NORMAL FULL CW			X	X

FIG. 2—Radio Wiring Diagram

ANTENNA INSTALLATION

The antenna is mounted on either the right or left front fender.

1. Use the template provided with the antenna to locate the mounting hole.

2. Drill a 1-inch diameter hole and four ⅛-inch holes as indicated. Locate the existing drill dimple beneath the 1-inch hole, and drill a ⅛-inch hole.

3. Feed the antenna lead-in cable through the two large holes into the passenger compartment.

4. Position the antenna on the cowl grille with the thick section of the pad facing the front of the car, and install the four mounting screws.

5. Remove the speaker grille and the speaker assembly. Route the antenna lead-in cable along the lip of the instrument panel, and plug the cable into the receptacle on the top of the radio. Clip the cable to the instrument panel with existing clips.

6. Install the speaker assembly and speaker grille.

Do not use excessive roughness when handling the antenna lead-in cable, as careless or excessive stretching of the cable may cause the wire in the center of the cable to break.

The antenna trimmer adjustment is pre-set at the factory and does not need to be adjusted at this time.

SUPPRESSION EQUIPMENT

When installing suppression items, make certain that all paint and dirt have been removed from between the condensers and the car. Tighten all nuts and bolts securely.

The high tension portion of the engine ignition system uses radio resistance wire as standard equipment. The balance of the suppression equipment is installed as follows:

Install the voltage regulator condenser as shown at "A" Fig. 3. Install the condenser bracket between the body sheet metal and the regulator.

It is not necessary to remove the generator assembly bolt to install the generator condenser. Loosen the bolt only enough to slide the mounting bracket under the lockwasher ("B" Fig. 3). Connect the condenser lead to the armature terminal of the generator.

Remove both front hub grease caps. Clean the caps and install the static collector as shown in "C" in Fig. 3. Bend the cotter pin away from the spindle center hole so that it will not interfere with the static collector. Install the grease caps and hub caps.

Install the bonding clip with the third existing screw from the left hand side ("D" Fig. 3) (right side for right mounted antenna).

Install the choke on the constant voltage regulator ("E" Fig. 3).

PUSH BUTTON ADJUSTMENTS

Be sure to warm up the receiver for 15 minutes before making the push button adjustments. Adjustment of the push buttons should be made during daylight hours due to the high sensitivity of the receiver.

Pull out the desired push button. Reduce the volume to a low value, and tune in the desired local station with the manual tuning knob. The station is correctly tuned in when the clearest tone is heard. Carefully push the button in all the way, then release it.

Adjust the remaining buttons and check all the positions for "repeat"

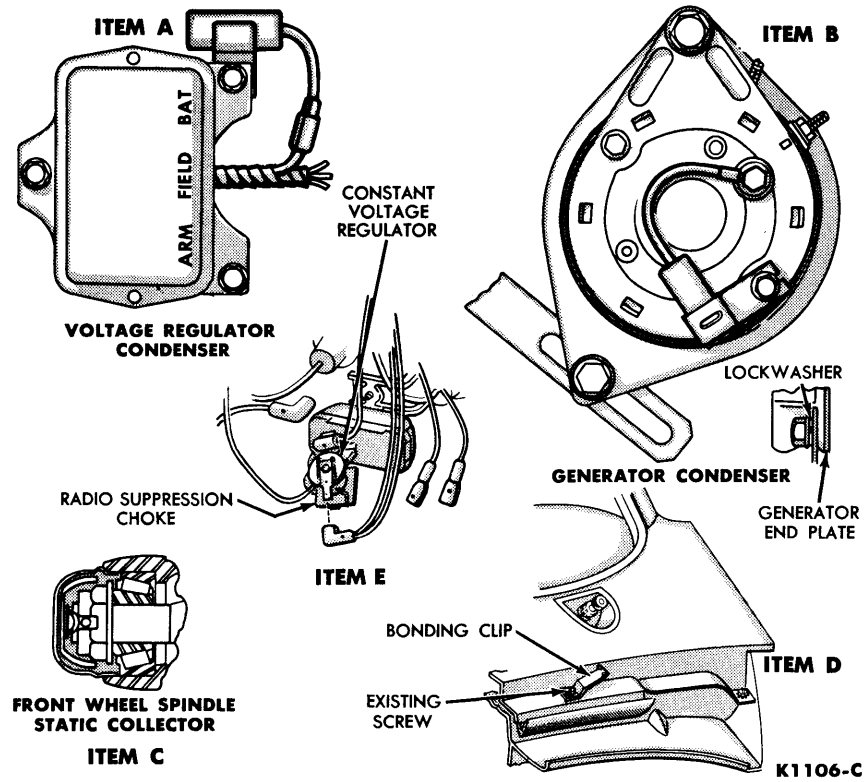

FIG. 3—Suppression Equipment Installation

accuracy. Repeat the procedure for any buttons that shift from the correct tuning point.

PILOT LIGHT REPLACEMENT

1. Remove the radio chassis from the car.
2. Move the dial pointer to the left end of its travel. Remove the dial background retaining pins, and carefully remove the background.
3. The dial light is then accessible for replacement (Fig. 4).

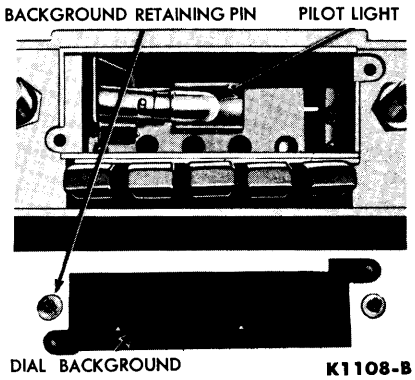

FIG. 4—Pilot Light Replacement

3 HEATER

The MagicAire fresh air heater is used on the Thunderbird. An electrical circuit diagram is shown in Fig. 5.

OPERATING PRINCIPLES

The fresh air heater is designed to function in conjunction with the fresh air ventilating system. Incoming fresh air enters the car through a grille running across the center of the cowl. The grille is open at all times. Any water that may enter is directed to drain holes on either side of the car.

The fresh air intake chamber connects to the passenger compartment through a fresh air outlet on each side of the car under the ends of the instrument panel. An air valve in each outlet opens or closes the outlet. The heater blower couples to an outlet provided in the right side of the fresh air intake chamber (Fig. 6).

The heater control panel (Fig. 12) which is mounted under the center of the instrument panel, controls the amount of heat and allows the selection of outside fresh air for ventilation, heating or defrosting.

Two air control knobs, one mounted in the left end of the instrument panel and the other mounted under the right end of the instrument panel, open two vents for selection of fresh air for direct ventilation.

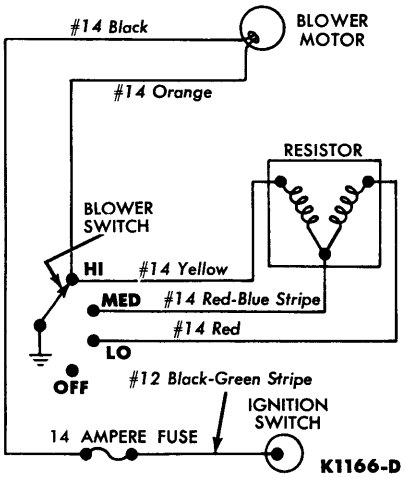

FIG. 5—Heater Circuit

TEMPERATURE CONTROL UNIT

The temperature of the heated air is controled by a capillary tube operated thermostat valve that automatically regulates the flow of water through the heater core. The capillary tube is located in the plenum chamber (Fig. 11). The action of the thermostat valve is regulated by the temperature control lever (left lever) in the heater control lever (Fig. 12). The thermostat controls the flow of hot water from completely off to full on.

AIR FLOW CONTROL

The right hand lever (Fig. 12) controls two air valves. When the control lever is at the OFF position, the defroster outlets are closed (Fig. 6), and vacuum is applied to a vacuum-operated solenoid closing the inlet to the blower. Both air vent knobs, may now be operated to control unheated fresh air entering the passenger compartment. The left control knob is in the left end of the instrument panel. The

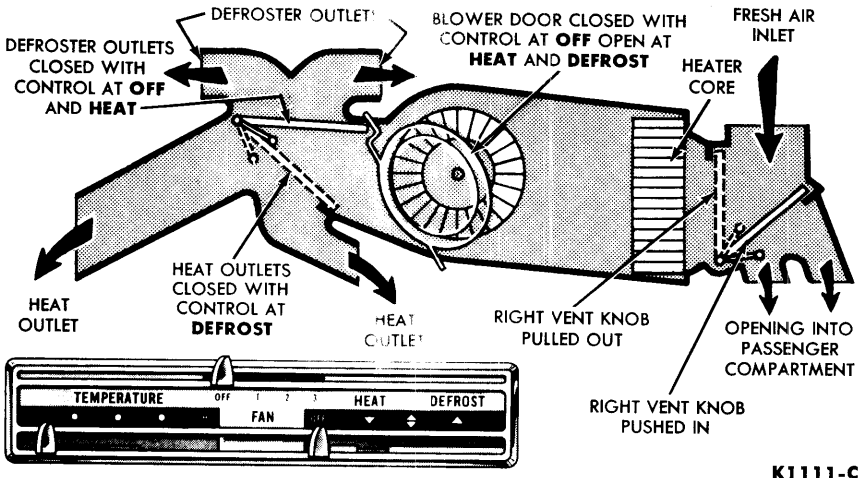

FIG. 6—Heater Air Flow

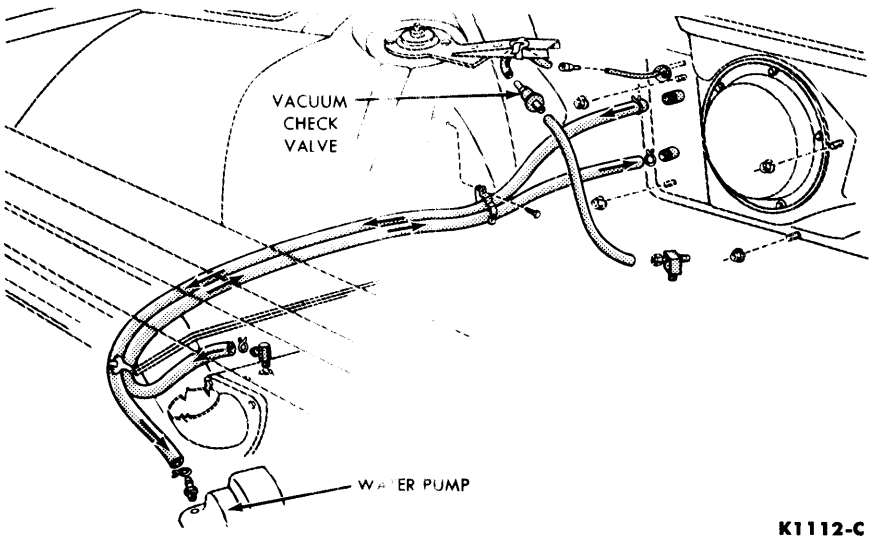

FIG. 7—Heater Hose Connections

right control knob is under the right end of the instrument panel.

When the right control lever is placed at the HEAT position, vacuum is cut off from the vacuum solenoid, opening the inlet to the blower. When the right air vent knob is pushed in, fresh air is forced through the heater core and through the heat outlets on both sides of the tunnel. The blower may be operated to assist the air flow.

Movement of the lever to the DEFROST position closes the plenum outlets and opens the defroster outlets (Fig. 6). This allows the blower to force outside air, heated or cool, across the windshield for defrosting or moisture removal.

The distribution of air between the defroster and the plenum chamber is regulated by the position of the control lever between HEAT and DEFROST.

The center lever controls three speed ranges for the blower fan by means of a switch and two resistors.

An air distributor (plenum chamber) contains two major outlets that serve as nozzles to direct the air downward to the floor. The air then flows under the front seat and circulates through the entire passenger compartment.

When the control lever is at the HEAT or DEFROST position, it may be necessary to open a ventilator or window slightly to allow complete circulation of the outside air through the passenger compartment.

REPLACEMENT

The fresh air heater consists of a heater core and valve assembly, motor and blower assembly, heater control units, air distributing plenum, defroster tubes and nozzles, air vent assemblies, and controls. Individual units of the heating system can be removed if service is required. Fig. 7 shows the heater hose connections on the engine.

HEATER BLOWER MOTOR

The heater blower motor is accessible from the engine compartment. Remove the blower cover plate. Remove the blower retaining screws, disconnect the motor wire and remove the blower assembly.

HEATER CORE

1. Drain the engine coolant. Disconnect the heater hoses at the dash panel.

2. Remove the instrument panel end covers, lower extension pad and mouldings and trim, the heater front cover, and the thermostat valve access coverplate.

3. Disconnect the thermostat water valve control cable.

4. Remove the heater core retaining screws and remove the heater core (Fig. 8).

5. Transfer the water control valve from the old core to the new core.

6. After installing the new core, check the heater operation before installing the heater cover and trim panels.

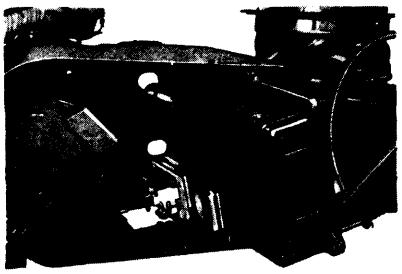

FIG. 8—Heater Core Removal

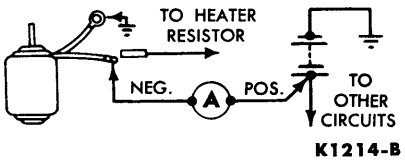

FIG. 9—Heater Motor Current Draw Test

TESTS AND ADJUSTMENTS

HEATER CURRENT DRAW TEST

Connect a 0-50 ammeter as shown in Fig. 9. The blower motor will operate independently of the control switch, and the current draw of the motor will be indicated on the ammeter. Normal current draw should be 6 to 8 amperes.

HEATER CONTROL ADJUSTMENT

The left lever of the heater control assembly is connected to the thermostat on the heater (Figs. 10 and 11). Remove the access door on the bottom of the heater (Fig. 11), loosen the cable clamp on the thermostat assembly and position the cable so that the thermostat valve is in the closed position (all the way forward, Fig. 11), when the temperature lever is 1/8 to 3/16 inch from the left end of the slot (Fig. 12). Tighten the clamp.

The right lever of the heater control assembly is connected to the defroster air valve and also controls the heater inlet door vacuum solenoid (Figs. 10 and 13).

Move the right lever all the way to the left. Adjust the defroster cable at the control head (Fig. 10), so that the defroster valve lever is all the way to the right (Fig. 13).

Adjustment of the vacuum solenoid that actuates the heater blower

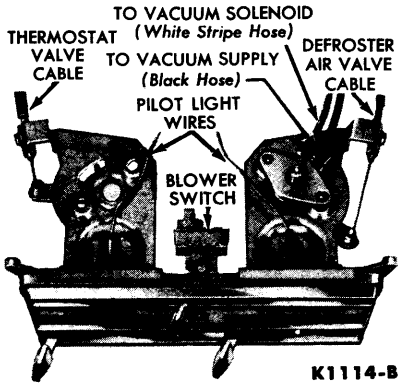

FIG. 10—Blower Switch Removal

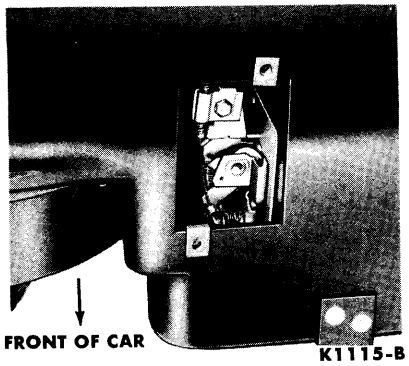

FIG. 11—Heater Thermostat Adjustment

inlet door must be done with the heater assembly removed from the vehicle. Adjust the solenoid (Fig. 14), so that the pre-load notch in the solenoid arm is flush with the front face of the solenoid, no vacuum applied.

To test the vacuum solenoid adjustment, set the right control lever at the OFF position. Turn the blower on. Start the engine. No air should come out of the heater outlets. If air does come out of the outlets, either the door is not completely closed or no vacuum has been applied to the solenoid.

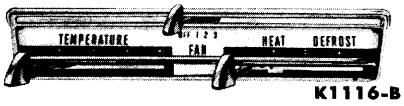

FIG. 12—Heater Control Lever Adjustment

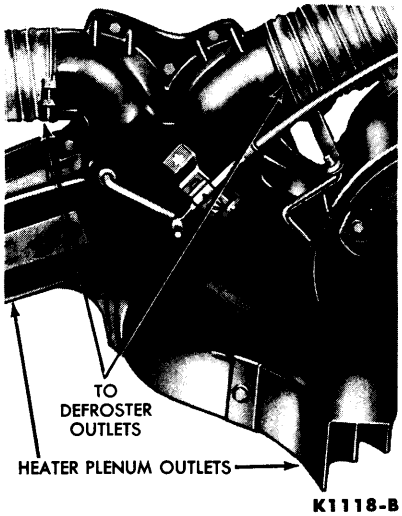

FIG. 13—Defroster Air Valve Adjustment

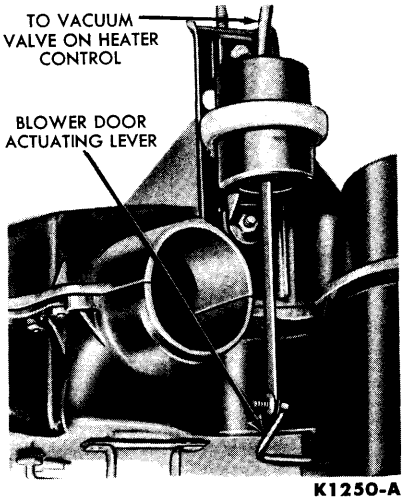

FIG. 14—Blower Door Vacuum Solenoid Adjustment

COWL AIR INLET VALVE ADJUSTMENT

Push the right air control knob (under the right side of the instrument panel), 1/16 inch from being seated. Adjust the Bowden cable (Fig. 15), so that the air valve control arm is all the way down. The left cowl air valve is adjusted so that the valve is closed when the knob is 1/16 inch from being seated. The control knob for the left air valve is located in the end of the instrument panel.

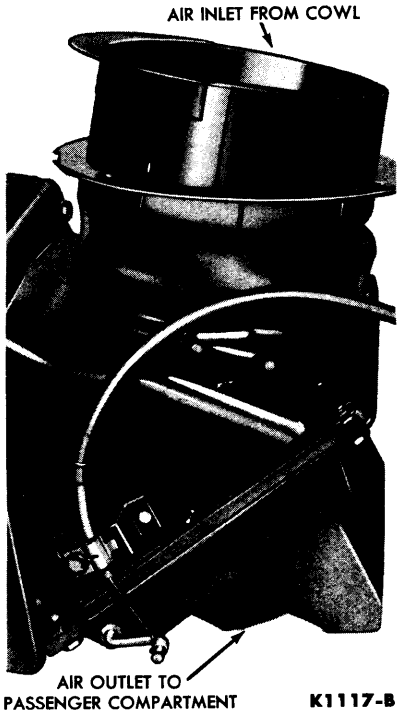

FIG. 15—Cowl Air Inlet Valve Adjustment

PART 10-3 AIR CONDITIONING

Section		Page
1	Air Conditioning Trouble Diagnosis	10-17
2	Operation	10-17
3	Maintenance and Test Procedures	10-20
4	Unit Repairs	10-26

1 AIR CONDITIONING TROUBLE DIAGNOSIS

The trouble shooting procedures for the air conditioner have been set up assuming that the test gauges used are accurate and that the manifold valves are in good condition.

AIR CONDITIONING TROUBLE DIAGNOSIS GUIDE

NO COOLING	**BLOWER SYSTEM** Check the following: **1.** Blower operation. **2.** Electrical circuits (page 10-18). **3.** Air valve adjustments (page 10-21).	**REFRIGERATION SYSTEM** **1.** Compressor clutch operation (page 10-19). **2.** Loss of refrigerant. Visually inspect fusible plug, check condenser for stone damage and sight glass for bubbles (page 10-23). **3.** System pressures incorrect (page 10-25).
INSUFFICIENT COOLING	**1.** Insufficient refrigerant (sight glass page 10-23). **2.** Clogged condenser. **3.** Air valves misadjusted (page 10-21).	**4.** Body opening air leakage. **5.** System pressures incorrect (page 10-25).
INTERMITTENT COOLING	**BLOWER SYSTEM** **1.** Electrical circuits (page 10-18). Circuit breaker, blower switch, blower motor.	**REFRIGERATION SYSTEM** **1.** Compressor clutch and thermostatic switch electrical circuit (Fig. 2). **2.** System pressures incorrect (page 10-25).

2 OPERATION

AIR CONDITIONING SYSTEM

The cooling portion of the Select-Aire Conditioner uses a receiver and expansion valve, an evaporator, a compressor, and a condenser. These parts are the standard units which are used in any air cooling system. Besides these major cooling components, the SelectAire Conditioner unit uses a liquid sight glass, an oil separator (integral with the compressor), a cooling unit thermostatic switch, a heater water shut-off valve, a heater core, a blower assembly, a control unit and the necessary connecting wires, ducts and hoses.

Fig. 1 shows the entire Select-Aire cooling system in schematic form. Arrows indicate the direction of refrigerant flow. Fig. 2 shows the electrical control circuits.

RECEIVER UNIT

The air cooling system stores the liquid Refrigerant-12 under pressure in a combination receiver and dehydrator (Fig. 1). The pressure in the receiver during operation varies from about 80 to 300 psi (pounds per square inch), depending on the surrounding air temperature and compressor speed. The receiver and condenser come charged and marked with the total weight, so that any leak can be detected before assembly.

The dehydrator serves the purpose of removing any traces of moisture that may have accumulated in the system. Even small amounts of mois-

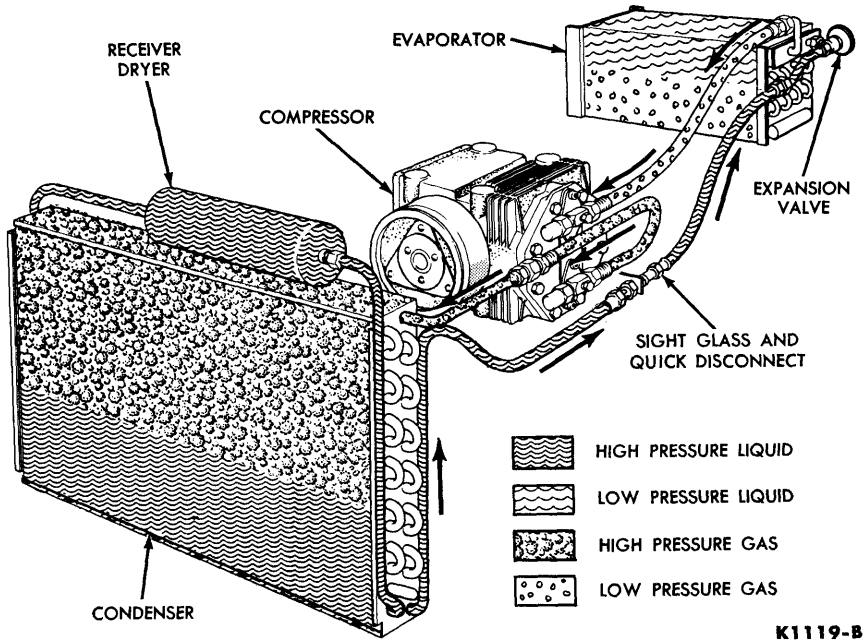

FIG. 1—SelectAire Air Cooling System

ture will cause an air cooling unit to malfunction. A fusible plug is screwed into the side of the receiver (Fig. 1). This will release the refrigerant when the refrigerant temperature exceeds 231°F.

EVAPORATOR UNIT

When the cooling system is in operation, the liquid Refrigerant-12 flows from the combination receiver and dehydrator unit through a flexible hose to the evaporator (cooling unit) (Fig. 1), where it is allowed to evaporate at a reduced pressure. The evaporator is mounted on the engine compartment side of the dash.

EXPANSION VALVE

The rate of refrigerant evaporation is controlled by an expansion valve (Fig. 1) which allows only enough refrigerant to flow into the evaporator to keep the evaporator operating efficiently, depending on its heat load.

The expansion valve consists of the valve and a temperature sensing capillary tube and bulb (Fig. 1). The bulb is clamped to the outlet pipe of the evaporator. Thus, the operation of the valve is controlled by the temperature of the evaporated liquid at the point where it leaves the evaporator or cooling unit. An equalizer connection at the equalizer outlet applies evaporator outlet pressure to one side of the valve diaphragm. Thus, the valve is controlled by both evaporator outlet temperature and outlet pressure.

The restricting effort of the expansion valve at the evaporator causes a low side pressure of 12-50 psi, depending on the surrounding air temperature and compressor speed.

LIQUID SIGHT GLASS

A liquid sight glass is mounted in the high pressure refrigerant line near the left top corner of the radiator (Fig. 3). The sight glass is used to check whether or not there is enough liquid refrigerant in the system. Foam, seen in the sight glass while the compressor is operating, is an indication of loss of refrigerant.

COMPRESSOR UNIT

The evaporator refrigerant leaving the evaporator, now in the form of a gas at a pressure of 12-50 psi, is pumped by the compressor (Fig. 4). located on the engine, into the top of the condenser. The condenser is located in front of the radiator.

The compressor maintains a high side pressure of from 80 to 300 psi, depending on the surrounding air temperature and compressor speed.

As the now heated and compressed refrigerant gas flows down through the condenser, it is cooled by air passing between the sections of the condenser, and the cooled, compressed refrigerant gas condenses to liquid

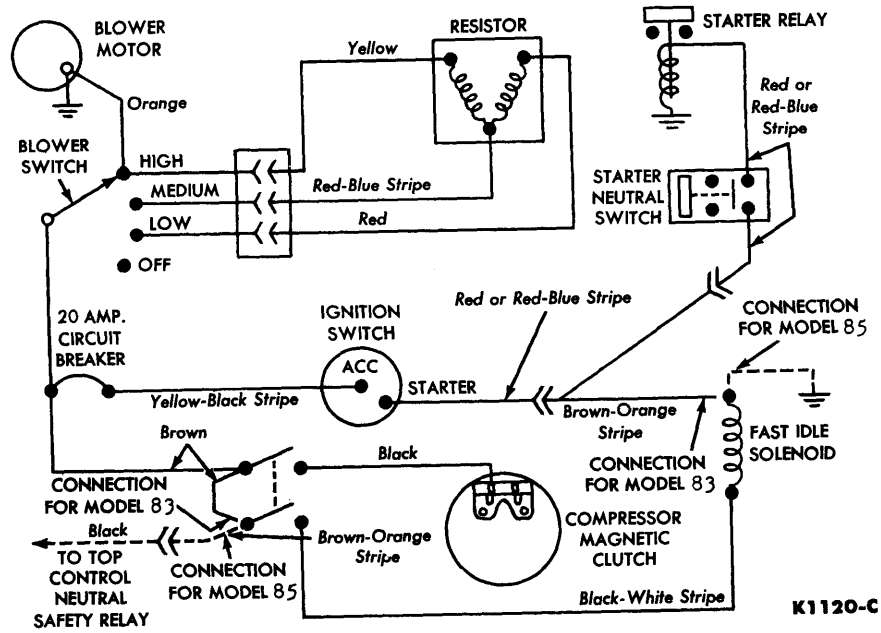

FIG. 2—SelectAire Electrical Control System

FIG. 3—Sight Glass

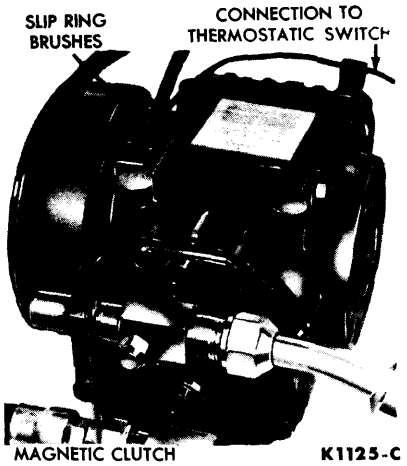

FIG. 4—Magnetic Clutch

refrigerant which then flows back into the receiver.

MAGNETIC CLUTCH

It is necessary to control the amount of cooling that the system produces. To accomplish this, the compressor is cut in and out of operation by the use of a magnetic clutch pulley mounted on the compressor crankshaft (Fig. 4). The magnetic clutch is controlled by a thermostatic switch (Fig. 5), which has its temperature sensing tube inserted in the fins of the evaporator core.

THERMOSTATIC SWITCH

The thermostatic switch (Fig. 5), controls the operation of the compressor by controlling the compressor magnetic clutch. The temperature sensing tube of the switch is placed in contact with the evaporator fins. When the temperature of the evaporator becomes too cold, the thermostatic switch opens the magnetic clutch electrical circuit disconnecting the compressor from the engine. Refrigerant continues to flow until the high and low pressures equalize. When the temperature of the evaporator rises to the upper limit at which the thermostatic switch is set, the thermostatic switch closes and energizes the magnetic clutch. This connects the compressor to the engine and cooling action begins again.

When the ignition switch is off, or the cooling control which operates the thermostatic switch (Fig. 6), is in the off position, the magnetic clutch is not energized, and the cooling system can not operate.

When the ignition switch is ON (engine running), and the cooling control is in the cooling range, the magnetic clutch is energized, the compressor is connected to the engine and the cooling system is in operation.

The thermostatic switch may be adjusted to maintain an average evaporator temperature of from 30°-60°F. The thermostatic switch operating differential temperature at any one setting is 60°F. The switch is controlled by the cooling control (Fig. 6). The further to the right that the control is moved, the cooler the setting of the thermostatic switch.

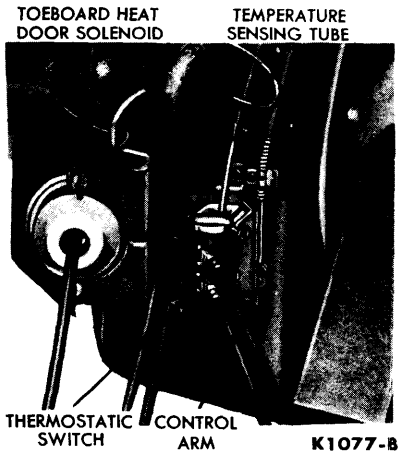

FIG. 5—Thermostatic Switch

SERVICE VALVES

The service valves on the compressor are used to test and service the cooling system (Fig. 1). The high pressure service valve, mounted at the outlet to the compressor, allows access to the high pressure side of the system for attaching a pressure gauge, or a servicing hose.

The low pressure valve, mounted at the inlet to the compressor, allows access to the low pressure side of the system for attaching a pressure gauge, or a servicing hose.

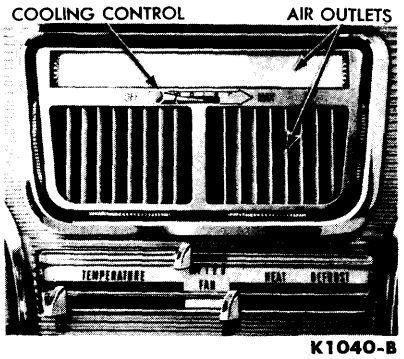

FIG. 6—Control Panel

Both service valves may be used to shut off the rest of the system from the compressor during compressor service.

CONTROL OPERATION

The operating controls for the SelectAire Conditioner consist of the control panel, the instrument panel air outlet register assembly (Fig. 6), the right and left inlet air vent controls, and the fast idle control.

CONTROL PANEL

The SelectAire control (Fig. 6), is mounted directly below the instrument panel on the tunnel.

The left control lever operates the heater thermostat water valve. When the lever is at LO, the water valve is closed. When the lever is all the way to the right, the valve is wide open. Positions between these extremes will provide air temperatures anywhere between maximum and minimum.

The right control lever operates various air valves through the use of four vacuum-operated solenoids and a Bowden cable. When the right lever is at the OFF position, vacuum is applied to all the vacuum solenoids. This closes the outlet door to the heater core and opens the recirculating door, closes both toeboard heat doors, and opens the cooling outlet register door (Fig. 7). The unit is then ready for cooling.

When the right lever is at the HEAT position, vacuum is cut off from all of the solenoids. This opens the outlet door to the heater core and closes the recirculating door, opens both toeboard heat doors, and closes the cooling outlet register door. The unit is then ready for heating.

When the right lever is at the DEFROST position, vacuum is applied to both toeboard heat door solenoids, closing the doors. This allows maximum air flow for defrosting. At the same time the lever actuates the defroster air valve, opening the defroster outlets.

The left and right cowl air vent inlets are opened and closed by two knobs. The left control knob is in the left end of the instrument panel. The right control is under the right end of the instrument panel.

COOLING CONTROL SETTINGS

1. Move the left control lever to LO.
2. Move the right control lever to OFF.

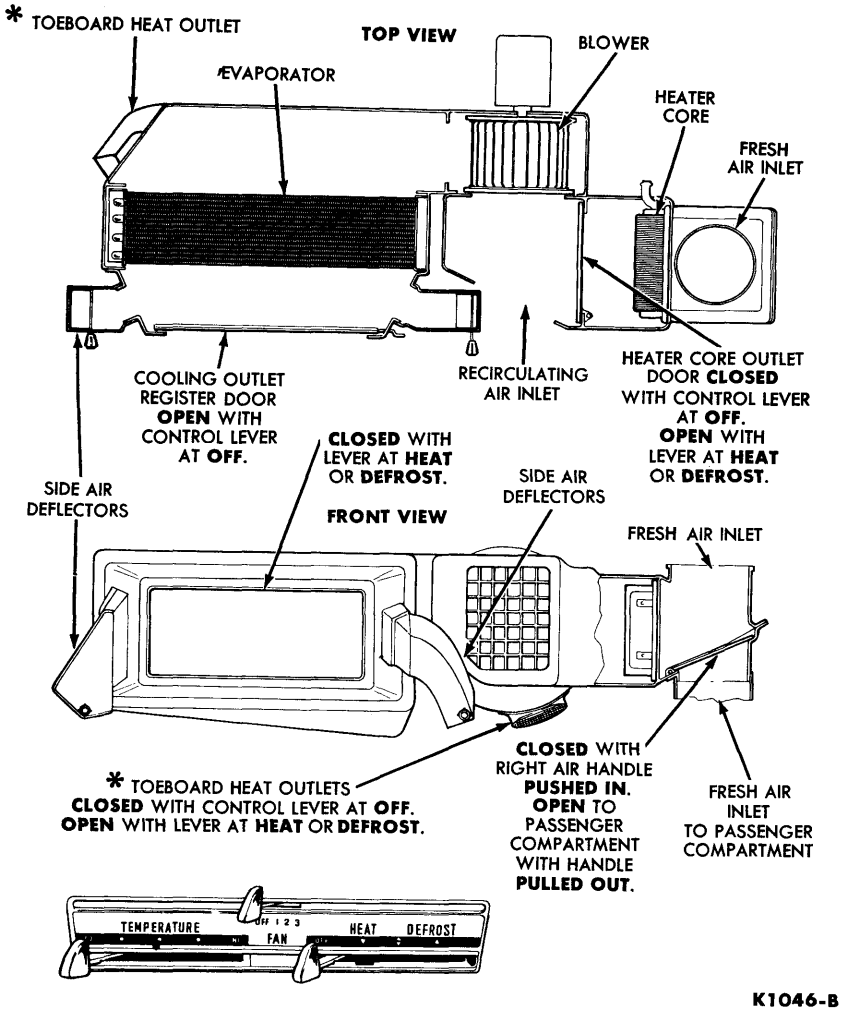

FIG. 7—Air Valves and Air Flow

3. Push both air vent controls in.
4. Set the FAN lever for the air velocity desired.
5. Set the cooling thermostat control lever (at the center of the cooling air outlet) to the desired amount of cooling.

HEATING CONTROL SETTINGS

1. Move the left control lever to the temperature desired.
2. Move the right control lever to the HEAT position.
3. Push both air vent controls in.
4. Set the cooling thermostat control lever to OFF.

With this arrangement the movement of the car on the road will force heated air into the car interior. If additional air volume is required the fan switch may be turned on.

The control lever labeled FAN (Fig. 6) operates the blower motor through a four position switch for OFF, low (1), medium (2), and high (3), speed.

For defrosting action, the controls are set the same as for heating action except that the right control is moved from the HEAT to the DEFROST position.

AIR OUTLETS

The SelectAire outlets (Fig. 6), are mounted in the center of the instrument panel. Five thumb operated wheels direct two streams of air in various directions.

3 MAINTENANCE AND TEST PROCEDURES

SAFETY PRECAUTIONS

The refrigerant used in the Ford air conditioner systems is Refrigerant-12. Refrigerant-12 is nonexplosive, noninflammable, noncorrosive, has practically no odor, and is heavier than air. Although it is classified as a safe refrigerant, certain precautions must be observed to protect the parts involved and the person who is working on the unit.

Use only Refrigerant-12 in the SelectAire Conditioner.

Liquid Refrigerant-12, at normal atmospheric pressures and temperatures, evaporates so quickly that it tends to freeze anything that it contacts. For this reason, extreme care must be taken to prevent any liquid refrigerant from coming in contact with the skin and especially the eyes.

Refrigerant-12 is readily absorbed by most types of oil. It is therefore recommended that a bottle of sterile mineral oil and a quantity of weak boric acid solution be kept nearby when servicing the air conditioning system. Should any liquid refrigerant get into the eyes, use a few drops of mineral oil to wash them out, then wash the eyes clean with the weak boric acid solution. Seek a doctor's aid immediately even though irritation may have ceased.

Always wear safety goggles when servicing any part of the refrigerating system.

The Refrigerant-12 in the system is always under pressure. Because the system is tightly sealed, heat applied to any part would cause this pressure to build up excessively.

To avoid a dangerous explosion, never weld, use a blow torch, solder, steam clean, bake body finishes, or use any excessive amount of heat on, or in the immediate area of, any part of the air cooling system or refrigerant supply tank, while they are closed to the atmosphere whether filled with refrigerant or not.

The liquid refrigerant evaporates so rapidly that the resulting refrigerant gas will displace the air surrounding the area where the refrigerant is released. To prevent possible suffocation in enclosed areas, always discharge the refrigerant from an air cooling system into the garage exhaust collector. Always maintain good ventilation surrounding the work area. **If the car is to be undercoated, make certain that the under-**

coating does not plug the evaporator drain tubes.

Although Refrigerant-12 gas, under normal conditions, is non poisonous, the discharge of refrigerant gas near an open flame can produce a very poisonous gas. This gas will also attack all bright metal surfaces. This poisonous gas is generated in small quantities when the flame-type leak detector is used. Avoid inhaling the fumes from the leak detector. **Make certain that Refrigerant-12 is both stored and installed in accordance with all state and local ordinances.**

When admitting Refrigerant-12 gas into the cooling unit, always keep the tank in an upright position. If the tank is on its side or upside down, liquid Refrigerant-12 will enter the system and damage the compressor.

When checking the refrigeration system in surrounding air temperatures above 90°F., set the controls for fast idle as prolonged engine idle will result in excessively high compressor pressures.

MAINTENANCE AND ADJUSTMENTS

MAINTENANCE

The amount of Refrigerant-12 in an air cooling system is important if maximum efficiency of the system is to be obtained. Check the Refrigerant-12 at the beginning of each operating season.

A check of the refrigerant may be made by observing the liquid sight glass (Fig. 3). Observe the refrigerant flow for a minute with the engine running at 1500 rpm, and the cooling control lever at the maximum cooling position. If no foam appears in the liquid behind the glass, it may be assumed that there is enough refrigerant in the system, providing that the cooling system is in working order. If foam does appear, add Refrigerant-12 to the system until the bubbles disappear, then add an additional ½ pound of refrigerant.

Compressor Oil Level Check. Under normal conditions, when the air cooling system is operating satisfactorily, the compressor oil level need not be checked. There is no place for the oil to go except inside the sealed system. When the car is first started, some of the oil will be pumped into the rest of the system. After 15 minutes of operation, most of the oil is returned to the compressor crankcase.

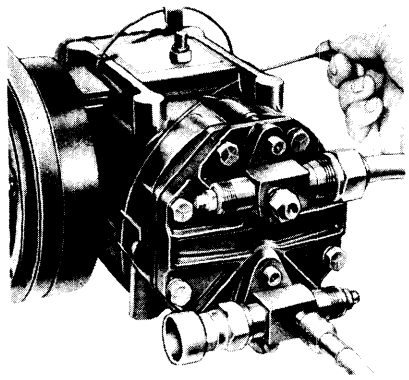

K1095-C

FIG. 8—Oil Level Check

Check the compressor oil level only if a portion of the refrigerant system is being replaced, or if there was a leak in the system and the refrigerant is being replaced.

Check the oil after the system has been charged and has been operating at an engine speed of 1500 rpm for 15 minutes in 60°F. surrounding air temperature or above, and with the compressor mounted on the engine. Turn off the engine, and isolate the compressor. Remove the oil filler plug from the compressor (Fig. 8), insert a flattened ⅛-inch diameter rod in the oil filler hole until it bottoms. The rod should show ¾ inch of oil. This is equivalent to 9 ounces of oil. It may be necessary to rotate the compressor crankshaft slightly (by hand) so that the dip rod will clear the crankshaft. If additional oil is needed in the compressor, add Suniso 5-G, or Capella D refrigerant compressor oil, or equivalent.

When checking the oil level of the York compressor, it will be necessary to bend the dipstick into a slight curve in order to reach the bottom of the compressor.

If more than ¾ inch of oil is indicated, as might happen if a new compressor is installed and oil already in the system is pumped back to the compressor, draw out the excess oil until the proper quantity is indicated.

Replace the oil filler plug, then evacuate and connect the compressor back into the system. Be sure to check the compressor filler opening for leaks.

ADJUSTMENTS

Efficient operation of the Select-Aire Conditioner is dependent upon proper adjustment of the control cables. Make a check of the adjustment of all controls whenever the evaporator or control panel has been removed.

Control Cable Adjustments. The left lever of the heater control assembly (Fig. 6), is connected to the thermostat on the heater. Adjust this cable at the thermostat as indicated in the heater section Page 10-16.

The right lever is connected to the defroster air valve and also controls

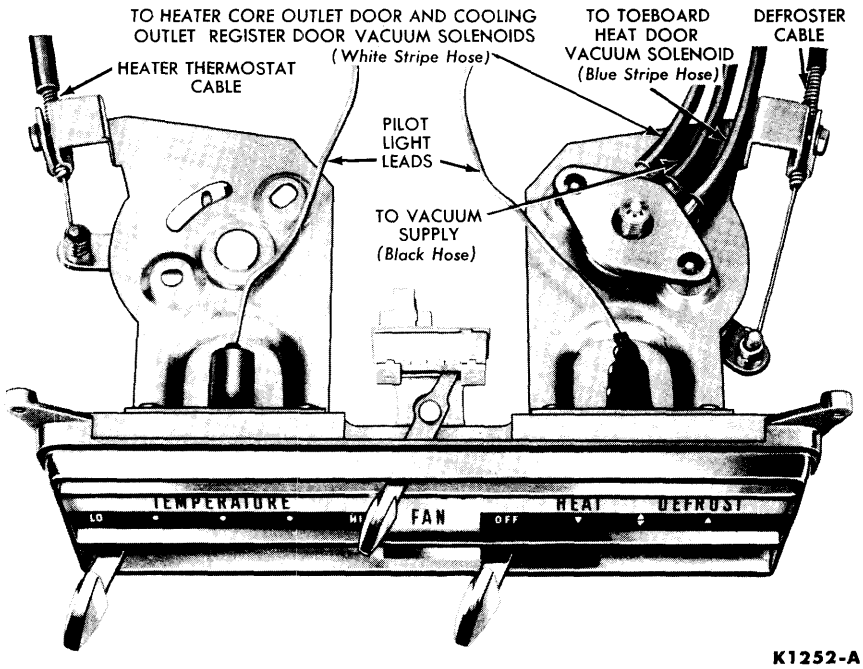

K1252-A

FIG. 9—Control Head Cable Attachments

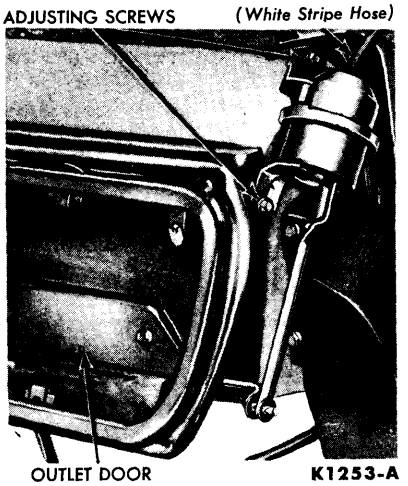

FIG. 10—Cooling Outlet Solenoid Adjustment

all of the vacuum solenoids. There is no adjustment of the vacuum valve on the control head.

Move the right lever all the way to the left. Adjust the cable at the control head (Fig. 9), so that the defroster outlets are closed. Check this adjustment by turning on the blower and making certain that no air is coming out of the defroster outlets.

Vacuum Solenoid Adjustments. The 4 vacuum-solenoid operated air doors are adjusted at each vacuum solenoid. Make the adjustments of these air doors with the engine not running (vacuum not applied).

Adjust the cooling outlet register door vacuum solenoid (Fig. 10) so that the outlet door is closed (actuating crank maximum counterclockwise), and the preload notch in the solenoid arm is flush with the front face of the solenoid. In the vacuum applied position this door should be wide open.

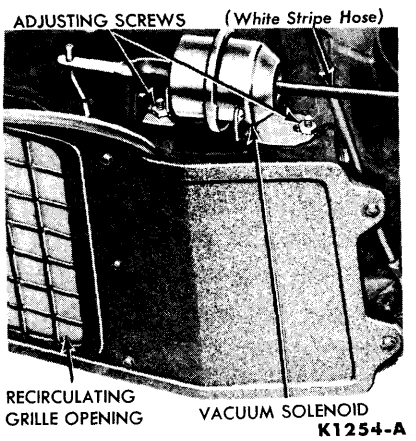

FIG. 11—Heater Core Outlet Door Solenoid Adjustment

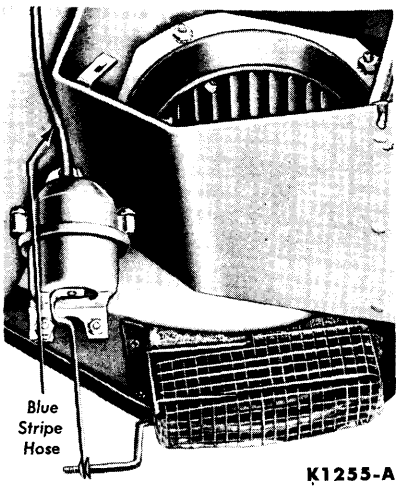

FIG. 12—Toeboard Heat Door Solenoid Adjustment

Adjust the heater core outlet door vacuum solenoid (Fig. 11), so that the door to the heater core is open (actuating crank maximum counterclockwise), and with the preload notch in the solenoid arm flush with the front face of the solenoid. In the vacuum applied position this door should open the recirculating grille opening.

Adjust each toeboard heat door solenoid (Figs. 5 and 12), so that the toeboard doors are open and the preload notch in the solenoid arm is flush with the front face of the solenoid. On the left hand toeboard heat door, the adjustment is made at the adjustable actuating arm. To check this adjustment, turn on the blower. Air should come out of the toeboard openings. No air should come out of these openings with vacuum applied (control lever at the DEFROST position).

Fresh Air Vent. Adjust both the right and left fresh air vents as outlined in the heater section, page 10-16.

Thermostatic Switch Adjustment. The thermostatic switch (Fig. 13), is controlled by a lever in the center of the air outlet register (Fig. 6). Set the lever at the OFF position. Adjust the Bowden cable at the switch so that the switch lever is at the bottom position (Fig. 13). With the switch lever in this position, also adjust the fast idle switch adjusting screw (insert Fig. 13) so that the switch is open.

Compressor Belt Adjustment. Adjust the belt tension to specifications. Use tool T62L-8620-A.

If the belt deflection is incorrect, make a belt adjustment. Loosen the four mounting bolts, slide the compressor toward the outside of the car, then tighten the mounting bolts. Recheck the adjustment for proper deflection.

TEST PROCEDURES

Before making any tests or working on the air conditioning system, be

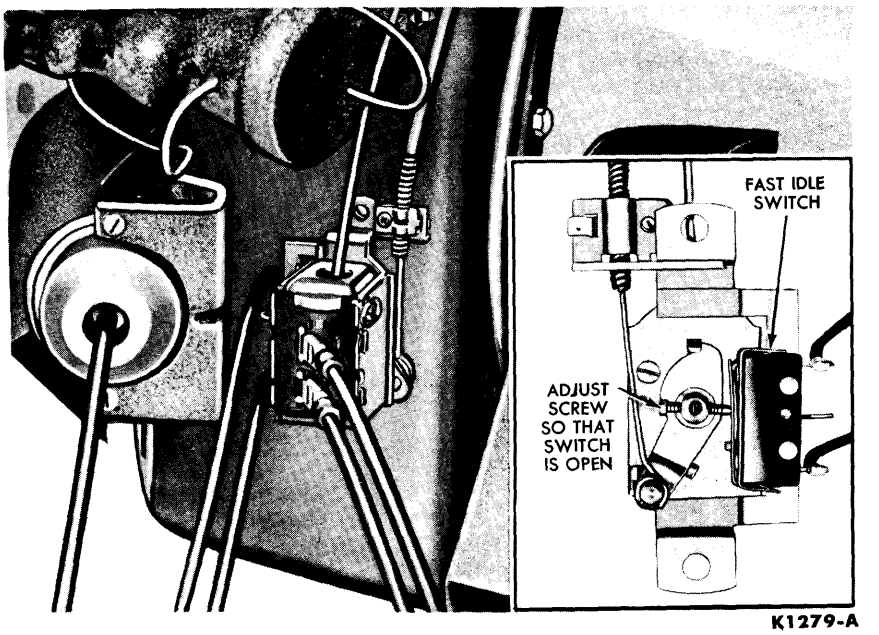

FIG. 13—Thermostatic Switch Adjustment

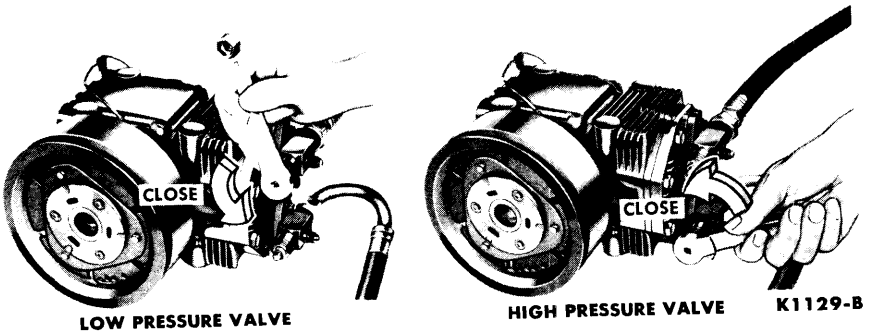

FIG. 14—Closing Service Valve Gauge Ports

sure to read the safety precautions given on page 11-20.

To perform the test procedures a test manifold and gauge set with connecting hoses, a refrigeration ratchet wrench, a tank of Refrigerant 12 (50-pound tank or 1-pound cans) a suitable scale for weighing the Refrigerant-12 tank, a leak detector, a thermometer, a plug and cap set, and safety goggles are required.

MANIFOLD GAUGE SET INSTALLATION

Remove the service valve stem covers and make sure that both service valves are at the maximum counterclockwise position (Fig. 14). Remove the service valve gauge port covers, and attach the flexible hoses to the gauge ports, to a vacuum pump and to a tank of Refrigerant-12 (Fig. 15). Turn both manifold gauge valves to the maximum clockwise position (Fig. 16) and close the vacuum pump valve. The manifold valves are so arranged that when they are in the maximum clockwise or closed position, the center manifold connection is shut off from the gauges, but the gauges continue to read the pressures in their respective hoses.

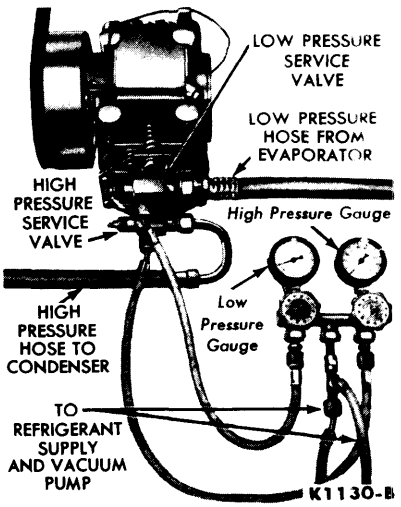

FIG. 15—Manifold Gauge Attached to System

TESTING FOR REFRIGERANT CHARGE WITH SIGHT GLASS

Foam in the sight glass indicates an undercharge of refrigerant. When observing the sight glass for foam, run the engine at 1500 rpm with the thermostatic switch control lever set for maximum cooling, and the blower on high.

When foam is observed in the sight glass, check the system for leaks, repair if necessary and charge the system with the proper amount of Refrigerant-12.

No foam in the sight glass will indicate either a full charge of a complete loss of refrigerant. Clean the sight glass top and bottom, and place a light to one side of it.

If the system is fully charged, the sight glass will be perfectly clear and have a tendency to magnify objects placed beneath it. If the system is completely empty of refrigerant, the sight glass will look oily and will not be as clear as when refrigerant is flowing through it.

When the compressor is not operating and when the system is completely charged, an occasional large bubble of Refrigerant-12 vapor will normally be seen in the sight glass.

Under conditions of extremely high temperatures occasional foam or bubbles may appear.

CHECKING FOR LEAKS

Attach the manifold gauge set (Fig. 15). Leave both manifold gauge valves at the maximum clockwise position (Fig. 16). Set both service valves at the center position. Both gauges should now show approximately 60 to 80 pounds pressure at 75°F. If very little or no pressure is indicated, leave the vacuum pump valve closed, open the Refrigerant-12 tank valve, and set the low pressure manifold gauge valve to the counter-

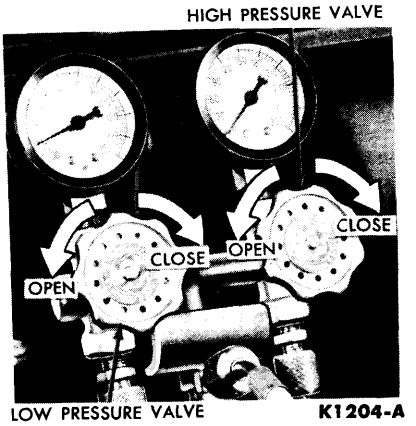

FIG. 16—Manifold Valves

clockwise position. This opens the system to tank pressure. Check all connections and the compressor shaft seal for leaks, using a flame type leak detector (Fig. 17). Follow the directions with the leak detector. The smaller the flame the more sensitive it is to leaks. Therefore, to insure accurate leak indication, keep the flame as small as possible. Hold the open end of the hose at each suspected leak point for 2 or 3 seconds. The flame will normally be almost colorless. The slightest leak will be indicated by a bright color to the flame. Be sure to check the manifold gauge set and hoses for leaks as well as the rest of the system.

If the surrounding air is permeated with refrigerant gas, the leak detector will indicate this gas all the time. Good ventilation is necessary to prevent this situation. A fan, even in a well ventilated area, is very helpful in removing small traces of refrigerant vapor.

DISCHARGING THE SYSTEM

Discharge the refrigerant from the system before replacing any part of the system, except the compressor.

To discharge the system, connect the manifold gauge set to the system (Fig. 15). Do not connect the mani-

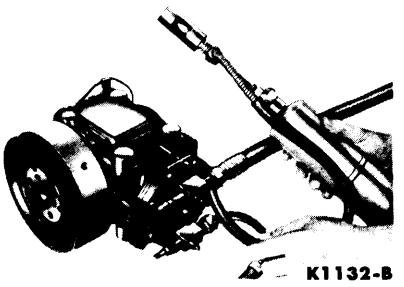

FIG. 17—Using Leak Detector

fold center connection hoses to the Refrigerant-12 tank, or vacuum pump. Place the open end of these hoses in a garage exhaust outlet. Set the high pressure manifold gauge valve at the maximum counterclockwise or open position. Open the high pressure service valve a slight amount (Fig. 18), and allow the refrigerant to discharge slowly from the system.

Do not allow the refrigerant to rush out, as the oil in the compressor will be forced out along with it.

CHARGING THE SYSTEM

The procedure for charging depends on whether a partial charge or a complete charge is being made. When a complete charge is being made, check for leaks first, then release the pressure and evacuate the system.

Evacuating the System. Attach the manifold gauge set, a tank of Refrigerant-12 and a vacuum pump to the system (Fig. 15). Make certain that the Refrigerant-12 tank valve is tightly closed. Set both service valves to the mid-position. Open both manifold valves (Fig. 16.) Release any pressure in the system. Open the vacuum pump valve and run the pump until the low pressure gauge reads at least 25 inches, and as close to 30 inches of vacuum as possible. Continue vacuum pump operation for 20 to 30 minutes to boil any moisture out of the system. Close the pump valve. Turn off the pump.

Making a Partial Charge. Attach the manifold gauge set (Fig. 15). Open both manifold valves (Fig. 16). Close the vacuum pump valve. Open the Refrigerant-12 tank valve. Purge the air from the high pressure hose by loosening the high pressure hose at the service valve, for a few seconds. Tighten the connections and set the high pressure manifold gauge valve at the maximum clockwise position. Loosen the low pressure gauge hose slightly at the low pressure service valve, for a few seconds, to purge the air from the hose. Tighten the connection. Set both service valves at the center position.

Run the engine at 1500 rpm with all controls at the maximum cold position. Charge the system until all foam disappears from the sight glass, then add ½ pound of Refrigerant-12. Shut the Refrigerant-12 tank valve.

It may be necessary to place the Refrigerant-12 tank in a container of hot water at about 150°F. to force the gas from the tank during charging. **Never heat the Refrigerant-12 tank with a torch. A dangerous explosion may result.**

Set both service valves at the maximum counterclockwise position (Fig. 14). Remove the gauge set, and cap the service valve gauge ports and valve stems.

Making a Complete Charge. Check for leaks first, then evacuate the system. Leave both service valves at the mid-position and the vacuum pump valve closed. Leave the low pressure manifold gauge valve at the maximum counterclockwise or open position (Fig. 16). Set the high pressure manifold gauge valve at the maximum clockwise or closed position (Fig. 16). Set all controls to the maximum cold position.

CHARGING FROM LARGE CONTAINERS. Open the Refrigerant-12 tank valve. Run the engine at 1500 rpm. Weigh 2¾ pounds of Refrigerant-12 into the system. During the charging, the high pressure may build up to an excessive value. This can be caused by an overcharge of refrigerant, or an overheated engine, in combination with high surrounding temperatures. Never allow the high pressure to exceed 240 pounds. Stop the engine, determine the cause, and correct it.

CHARGING FROM SMALL CONTAINERS. Refrigerant - 12 is available in 1 pound cans. A scale is not necessary if these small containers are used instead of a tank.

Attach the hose, that would normally go to the large tank (Fig. 15), to the special valve that is provided for the small cans. Close the valve (maximum clockwise position) and follow the procedure for leak testing, evacuating and charging the system as previously given.

For charging, attach a 1-pound can of Refrigerant-12 to the special valve, and open the valve. Keep the can in an upright position. When the can is empty (no frost showing), close the valve, remove the empty can, attach a new one, and open the valve again. Use 3 full cans. As each can contains 15 ounces, this would amount to 45 ounces of Refrigerant-12.

After the proper charge has been made, close the Refrigerant-12 tank valve, and check the system pressures for proper operation. Set both service valves at the maximum counterclockwise position (Fig. 14). Remove the gauge set, and cap the service valve gauge ports and valve stems.

CHECKING SYSTEM PRESSURES

The pressures developed on the high pressure and low pressure side of the compressor indicate whether or not the system is operating properly.

Attach the manifold gauge set (Fig. 15). It will not be necessary to attach the Refrigerant-12 tank unless refrigerant is to be added to the system. Set both manifold gauge valves at the maximum clockwise, or closed, position (Fig. 16). Set both service valves at the center position. Run the engine at 1500 rpm. Set all controls at the maximum cooling position. The actual pressure indicated on the gauges will depend on the temperature of the surrounding air and the humidity. Higher air temperatures along with low humidity, will give higher system pressures. The figures given are for an ambient (surrounding air) temperature of 75° F., 50% relative humidity.

The low pressure gauge should indicate a pressure of from 12-50 psi at 75°F. The high pressure gauge should indicate a pressure 6 or 7 times the low pressure or 80-300 psi.

At idle speed and a surrounding air temperature of 100°-110° F., the high pressure may go as high as 300 pounds or more. If it becomes necessary to operate the air conditioner under these conditions, keep the high pressure down with a fan directed at the condenser and radiator.

Table 1 shows the temperature pressure relationships for Refrigerant-12. These are the pressures that would occur at the temperatures indicated when the system is not in operation. The temperature is the actual internal temperature of the refrigerant gas.

When the system is in operation, the internal pressures vary from point to point even though the 2 points in question may be close together and both on the high or low pressure side of the system. Under operating conditions it is very difficult to accurately measure the internal refrigerant gas temperature. Because of these facts. Table 1 should be used only as a general indication of what the pressures should be at surrounding air temperatures.

CHECKING MANIFOLD GAUGE ACCURACY

The data given in Table 1 may be used to check the accuracy of the manifold gauges. The gauges should read zero when they are open to at-

TABLE 1—Refrigerant-12 Temperature-Pressure Relationships

Gas Temperature (° F.)	Gas Pressure (psi)	Gas Temperature (° F.)	Gas Pressure (psi)
−10	4.5		
− 5	6.8	70	70.1
0	9.2	75	76.9
5	11.9	80	84.1
10	14.7	85	91.7
15	17.7	90	99.6
20	21.1	95	108.1
25	24.6	100	116.9
30	28.5	105	126.2
35	32.6	110	136.0
40	37.0	115	146.5
45	41.7	120	157.1
50	46.7	125	168.4
55	52.0	130	180.2
60	57.7	135	192.6
65	63.7	140	205.5

mospheric pressure, and should read the gas pressure corresponding to the temperature of a Refrigerant-12 container, when connected to the container.

Make certain that the temperature used is the actual temperature of the Refrigerant-12 container. If the container has been sitting overnight in a room and the room temperature has been constant during this time, the temperature of the room may be used to determine the pressure.

INTERPRETING ABNORMAL SYSTEM PRESSURES

Low Pressure Below Normal, High Pressure Normal. These pressures indicate a restriction between the receiver and the expansion valve or between the expansion valve and the low pressure service valve. If the low pressure is actually a vacuum, the expansion valve is probably closed tightly. Shut the system down and allow it to warm to room temperature. Start the engine and if the evaporator will now become cool, the expansion valve was frozen because of moisture in the system. Release the refrigerant, replace the dryer-receiver assembly, check for leaks, then evacuate and charge the system.

Whenever the system has been opened 3 times the receiver dryer should be replaced as a precaution against internal icing of the expansion valve.

Check the system between the receiver outlet and the low pressure service valve for restrictions, by feeling all of the connections and components. Any portion that is cold to the touch or that frosts up, with the pressures as indicated here, is restricting the refrigerant flow.

Low Pressure Above Normal, High Pressure Normal. Observe both pressure gauges. If the low pressure is above normal (12-50 pounds) and the high pressure is at or near normal (80-300 pounds), the expansion valve is not operating properly. This condition may cause the compressor to receive slugs of liquid and thus to be very noisy. Also, the suction side of the compressor and the crankcase and head will be colder than normal and will "frost up."

The expansion valve will allow too much liquid refrigerant to flow to the compressor if it is defective or, if the temperature sensing element is not making close contact with the evaporator outlet pipe. Make sure that the element is securely clamped to the outlet pipe, and properly covered.

High Pressure Below Normal, Low Pressure Above Normal. If the 2 pressures are equal or within 30 pounds of each other, the compressor may be defective. Perform a compressor volumetric efficiency test. Repair or replace the compressor as needed.

High Pressure Above Normal. High compressor head pressures are caused by an overcharge of refrigerant, condenser air passages clogged, a restriction between the condenser inlet and the receiver, or high surrounding air temperatures. High head pressures are generally evidenced by a noisy compressor.

Discharge excess refrigerant until foam is seen in the sight glass (system operating at 1500 engine rpm), then add ½ pound of refrigerant.

COMPRESSOR VOLUMETRIC EFFICIENCY TEST

Malfunction of the compressor can be isolated by checking the compressor volumetric efficiency with a special tool. Make the test with the car in a clean dry atmosphere.

Run the engine at 1500 rpm with all controls at maximum cooling for at least 10 minutes. Adjust the engine idle with a tachometer to exactly 515 rpm with the compressor clutch engaged. Turn the engine off and set the cooling control to the OFF position. Isolate the compressor, then remove both high and low pressure service valve gauge port caps, allowing the gas in the compressor to escape.

Attach the special tool (calibrated orifice with gauge attached) to the high pressure service valve gauge port (Fig. 19). Start the engine. Engage the magnetic clutch for 15 second intervals, by moving the cooling control from the OFF position to the maximum cooling position, and observe the maximum gauge pressure at the end of each 15-second interval. **Be sure to allow the gauge pressure to drop to zero between the 15-second intervals.** Stop the engine.

A good compressor will bring the pressure to 200 psi in 15 seconds. If the pressure does not come up to 200 psi, in 15 seconds, clean the compressor intake screen. If the intake screen is clean, remove and inspect the valve plate. Most of the failures to come up to the 200 psi specification will be caused by small foreign particles under the valve plate leaves or a defective valve plate. Clean the valve plate and assemble it to the compressor using new gaskets. If this does not effect a cure, replace the

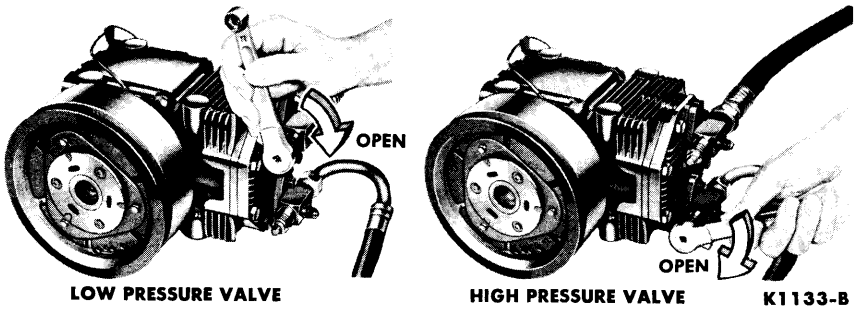

FIG. 18—Opening Service Valve Gauge Ports

valve plate or the compressor as required.

If no further work is to be done on the system after making the volumetric efficiency test, disconnect the orifice tool and gauge, evacuate the compressor and connect it back into the system.

CHECKING SYSTEM TEMPERATURES

A good indication may be had of overall cooling system operation by measuring the outlet air temperature.

Set all controls for maximum cooling. Place the stem of the thermometer through the outlet air vent as far as it will go. Run the engine at 1500 rpm. Turn the blower switch to high.

The thermometer should indicate a temperature of approximately 40°-50°F. at high blower and maximum cooling with the system cycling.

THERMOSTATIC SWITCH TEST

The switch must be removed for this test. Set the switch cam at the coldest temperature setting. Place the sensing tube in a container filled with finely crushed ice and pure water (32°F.). If the switch clicks, it is defective and should be replaced. If the switch does not click, leave the sensing tube in the ice and turn the cam counterclockwise until a click is heard. The cam should move approximately 30° from the cold setting stop, which represents the 32°F. setting, or the temperature of the melting ice.

With the sensing tube still in the ice, turn the cam back to the cold temperature setting. If the switch clicks it is defective and should be replaced. If the switch does not click, remove the unit from the ice and expose the sensing tube to the air (approximately 75° F.). The switch should click almost immediately after removal from the ice. If it takes longer than 5 or 6 seconds for the switch to click, it is defective and should be replaced. Air temperatures more or less than 75°F. will cause the switch to click sooner or later respectively. A known good thermostatic switch can be used as a comparison.

EXPANSION VALVE TEST

Remove the expansion valve from the evaporator. Connect the Refrigerant-12 supply hose to the expansion valve inlet with a suitable adapter. Open the refrigerant supply valve slightly. Refrigerant gas should come out of the expansion valve outlet. If no gas comes out of the outlet, the temperature sensing bulb has lost its charge and the expansion valve must be replaced.

ELECTRICAL UNIT CURRENT DRAW

The current drawn by the various electrical units of the air conditioner at a voltage of 12 volts, is as follows:

SelectAire Blower	High	13-14 amperes
	Medium	8.5-9.5 amperes
	Low	6-7 amperes
Magnetic Clutch		1.8 amperes

4 UNIT REPAIRS

Possible malfunction, of the various units that comprise the air conditioning system, is determined by trouble shooting and test procedures presented previously. With the exception of the compressor, replacement rather than repair of the individual unit is always recommended. In the case of the compressor, replacement kits for certain components are available. When the use of such kits is unable to eliminate the trouble, the compressor must be replaced.

The disassembled heater and evaporator assembly is shown in Fig. 20. The disassembled receiver, condenser, and compressor assembly is shown in Fig. 21.

Replacement of the blower and motor assembly, the compressor, or the thermostatic switch can be effected without losing the refrigerant.

Replacement, of all other units or lines in the system, requires complete discharge of refrigerant before removal, and recharge after installation.

When any part of the refrigerant circuit is broken for service operation, install a new metal gasket in any fitting when the fitting mating surfaces are scored. Use of an old gasket or no gasket, when the mating surfaces are scored, may cause refrigerant leakage.

HEATER BLOWER MOTOR

The heater blower motor is accessible from the engine compartment. Remove the blower cover plate. Remove the blower retaining screws, disconnect the motor wire and remove the blower assembly.

When replacing a blower motor, make certain that the fan turns freely in the housing and that the motor ground wire makes good contact at its mounting point.

HEATER CORE

1. Drain the engine coolant. Disconnect the heater hoses at the dash panel.

2. Remove the instrument panel right extension and trim, and remove the heater front cover.

3. Disconnect the thermostat water valve control cable.

4. Remove the heater core retaining screws and remove the heater core (Fig. 22).

THERMOSTATIC SWITCH

The thermostatic switch is mounted on the left end of the evaporator case (Fig. 5).

1. Remove the instrument panel left extension and trim and the front duct assembly.

2. Disconnect the control cable and the wires from the switch.

3. Remove the mounting nuts, pull the sensing tube from the evaporator fins and remove the switch.

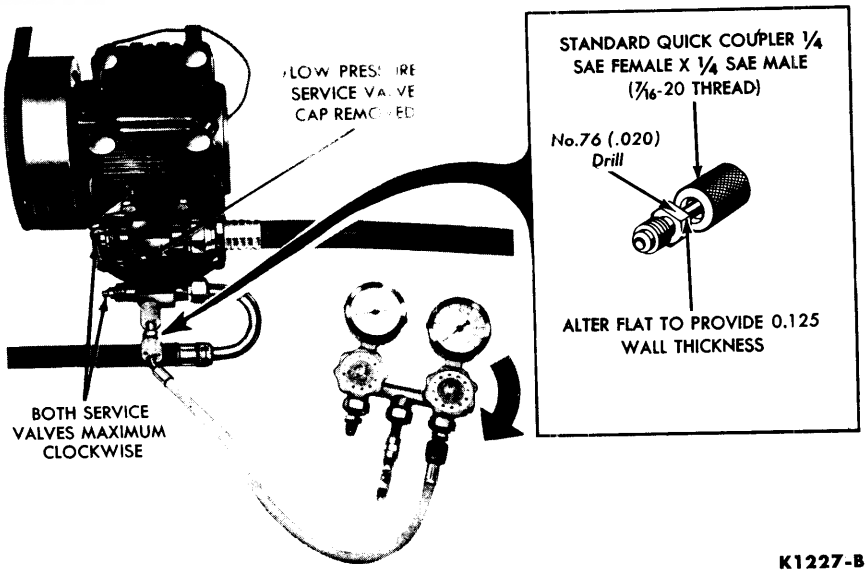

FIG. 19—Volumetric Efficiency Test

4. Position the new switch on the mounting bolts with the sensing tube clipped on the side of the case (Fig. 5). Install the mounting nuts.

5. Attach and adjust the control cable, attach the wires.

6. Push the temperature sensing tube into the evaporator approximately 4 inches (Fig. 23).

7. Install the front duct assembly and the instrument panel extension and trim.

EXPANSION VALVE

Before replacing an expansion valve, discharge the refrigerant from the system. After the new valve is installed, charge the system with refrigerant.

1. Remove the instrument panel left extension and trim.

2. Carefully slit the insulation from the expansion valve and evaporator outlet pipe.

3. Remove the temperature sensing bulb clamp and bulb (Fig. 24).

4. Disconnect the expansion valve at the inlet, outlet and equalizer connections and remove the valve.

5. Place the new valve in position, and tighten the inlet, outlet and equalizer connections.

6. Place the temperature sensing bulb in position and install the clamp.

7. Leak test the connections, evacuate and charge the system.

8. Wrap the insulation around the pipes and valve, including the suction tube and capillary tube.

9. Install the instrument panel left extension and trim.

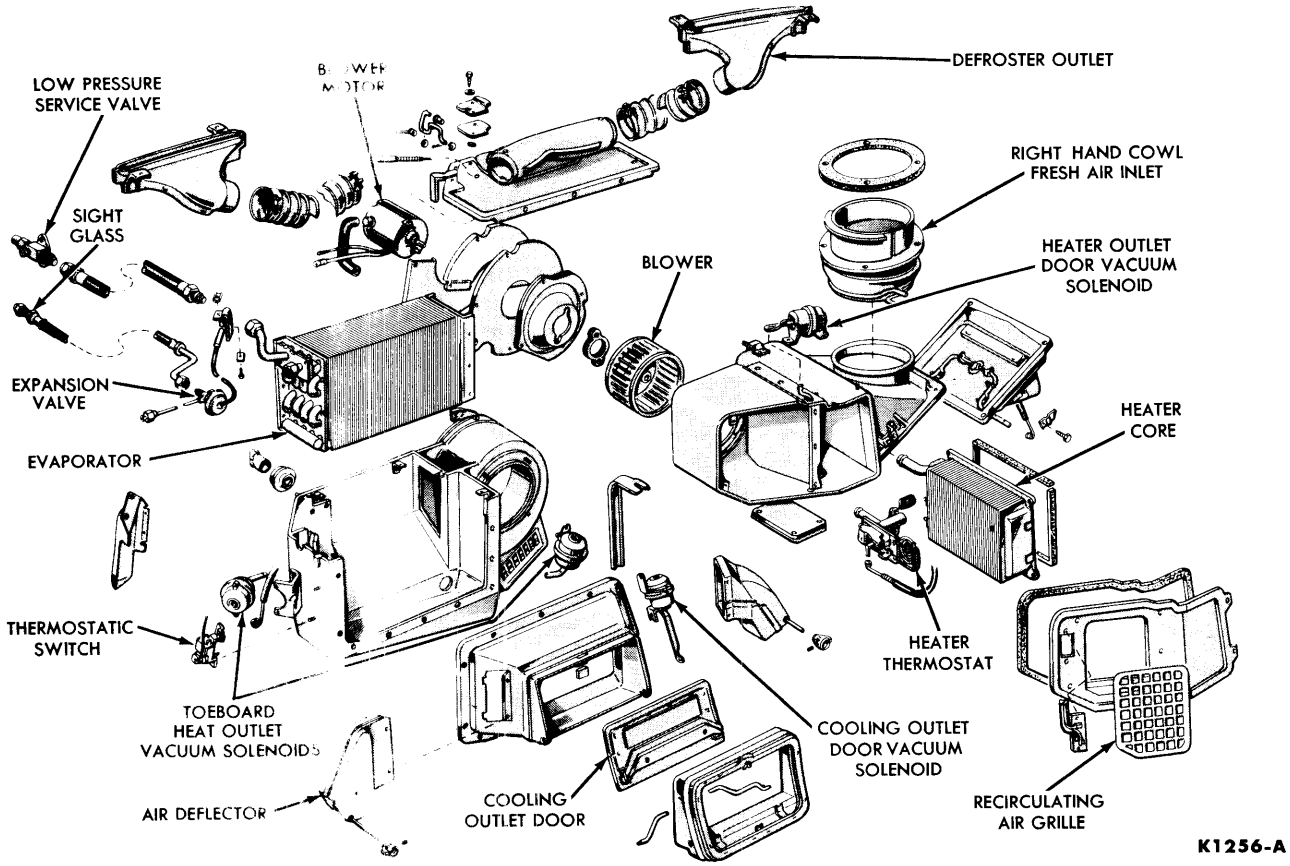

FIG. 20—Disassembled Heater-Evaporator Assembly

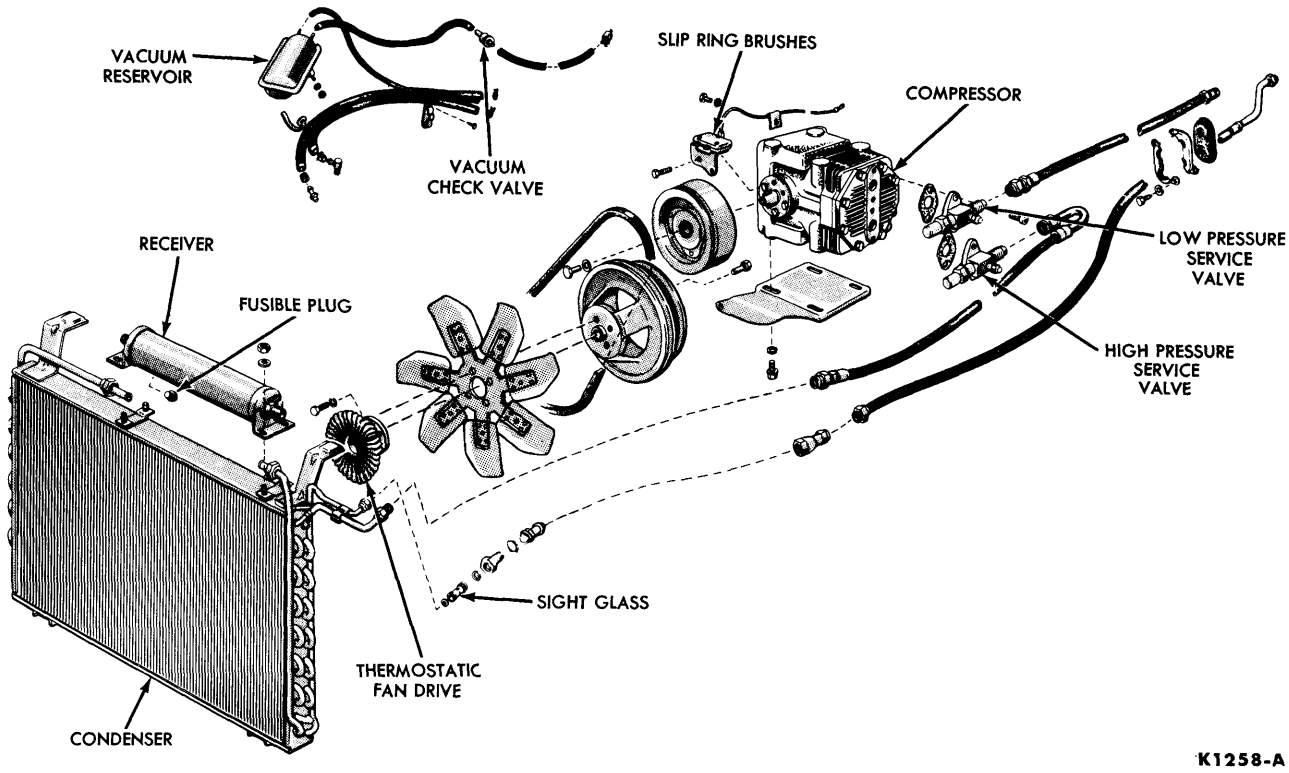

FIG. 21—Diassembled Receiver, Condenser, Compressor

HEATER ASSEMBLY REPLACEMENT

1. Drain the coolant and disconnect the heater hoses. Remove the instrument panel right extension and trim.

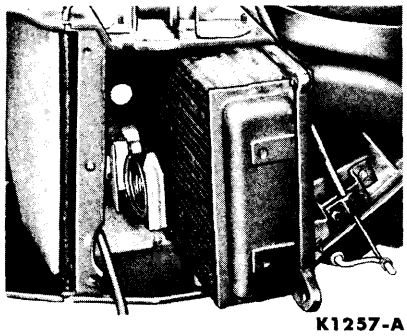

FIG. 22—Heater Core Removal

2. Disconnect the vacuum line at the heater outlet door vacuum solenoid, and the Bowden cable from the right fresh air inlet duct valve.
3. Remove the heater front cover, disconnect the Bowden cable at the thermostat valve. Disconnect the fresh air duct.
4. Remove the heater case to evaporator case attaching nuts, the heater case to dash panel attaching nut, and remove the heater assembly.
5. Install the new heater assembly to the dash panel and install the heater case to evaporator case attaching nuts.
6. Connect and adjust the heater thermostat Bowden cable.
7. Install the heater front cover and the vacuum line to the heater door vacuum solenoid. Attach and adjust the right fresh air vent valve Bowden cable. Install the instrument panel extension and trim.
8. Attach the heater hoses and fill the cooling system.

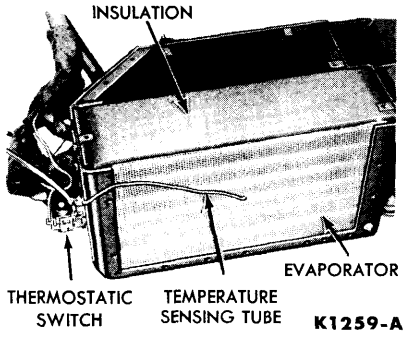

FIG. 23—Evaporator Removal

EVAPORATOR ASSEMBLY REPLACEMENT

1. Remove the instrument trim panels front duct assembly, heater assembly, and radio speaker.
2. Discharge the system. Disconnect the defroster hoses, vacuum lines to vacuum solenoids and Bowden cables.
3. Disconnect the evaporator inlet and outlet hoses at the compressor and sight glass. Remove the evaporator case attaching nuts and remove the evaporator assembly.
4. Place the new evaporator and hose assembly in position and install the mounting nuts.
5. Attach the evaporator hoses to the sight glass and compressor.
6. Install the heater assembly, defroster hoses, vacuum lines and Bowden cables.
7. Check for leaks, evacuate and charge the system.
8. Install the front duct and trim panel assemblies.
9. Install the radio speaker.

EVAPORATOR CORE

1. Remove the heater assembly and the evaporator assembly.
2. Remove the expansion valve and the top cover (Fig. 23). Pull the thermostatic switch sensing tube from the evaporator core.
3. Remove the evaporator core attaching screws and lift the core out of the case.

4. Position the new core in the case and install the attaching screws.
5. Attach the expansion valve. Position the thermostatic switch sensing tube. Install the insulation and top cover.
6. Install the evaporator assembly and the heater assembly.

CONTROL PANEL

1. Remove the instrument panel right and left extensions and trim. Remove the tunnel trim panel.
2. Remove the left air duct deflector assembly.
3. Remove the control panel retaining screws, Bowden cables, vacuum lines, and wires.
4. Remove the control panel through the opening on the left side above the tunnel side panel. On cars equipped with a movable steering column, remove the vertical brace.
5. Place the new control panel in position and attach the vacuum lines and wires (Fig. 9). Attach and adjust the Bowden cables.
6. Install the left air duct deflector assembly, the tunnel trim panel and the instrument panel right and left extensions and trim.

RECEIVER

1. Discharge the system. Remove the upper radiator shield.
2. Disconnect the receiver inlet and outlet tubes.
3. Remove the receiver attaching bolts and remove the receiver.
4. Install the new receiver to the condenser and attach the connecting pipes.
5. Leak test the connections, evacuate and charge the system.
6. Install the upper radiator shield.

CONDENSER AND RECEIVER ASSEMBLY

1. Discharge the system. Remove the upper radiator shield.
2. Disconnect the inlet and outlet hoses.
3. Remove the two lower condenser mounting bolts. Push the top of the radiator backwards a few inches and remove the assembly.
4. Position the new assembly and install the lower mounting bolts.
5. Attach the refrigerant hoses, leak test the joints, evacuate and charge the system.
6. Install the upper radiator shield.

COMPRESSOR SERVICE

The compressor is not completely disassembled for service. Most repairs can be made by replacement of certain parts which are available in service kits. If more extensive repair is necessary, replace the compressor assembly.

Service kits for the valve plates, the suction and discharge fittings, and the crankshaft seal can be installed without removing the compressor from the car.

All compressor service operations, except belt replacement and magnetic clutch replacement can be performed only after the unit has been isolated from the rest of the system as described below.

ISOLATING THE COMPRESSOR

To isolate the compressor from the system, turn both the high and the low pressure service valves to the extreme clockwise position (Fig. 18). Loosen the cap on the high pressure service valve gauge port, and allow the gas to escape until the compressor is relieved of refrigerant pressure. **Loosen the cap a small amount only, and do not remove it until the pressure is completely relieved.**

To connect the compressor back into the system, evacuate the compressor at the high pressure service valve gauge port, close the vacuum pump valve, turn both service valves to the maximum counterclockwise position, and cap the high pressure service valve gauge port and service valve stems.

VALVE PLATE REPLACEMENT

1. Isolate the compressor, disconnect the service valves, and remove the compressor. Remove the head bolts.
2. Tap the cylinder head and valve plate lightly to loosen them, and remove these parts from the top of the compressor body (Figs. 25 and 26). **Be careful not to shear off the valve plate locating pins.**
3. Remove and discard all gaskets, and be sure to clean gasket shreds from all gasket surfaces. Examine the cylinders and top of the pistons, particularly in case of valve breakage. If there are score marks, replace the compressor assembly.
4. If the cylinders and pistons are in good condition, check the valve plate and valve leaves for damage. If the valve assembly is in good condition, it can be used again. If the valve plate is damaged, install the entire

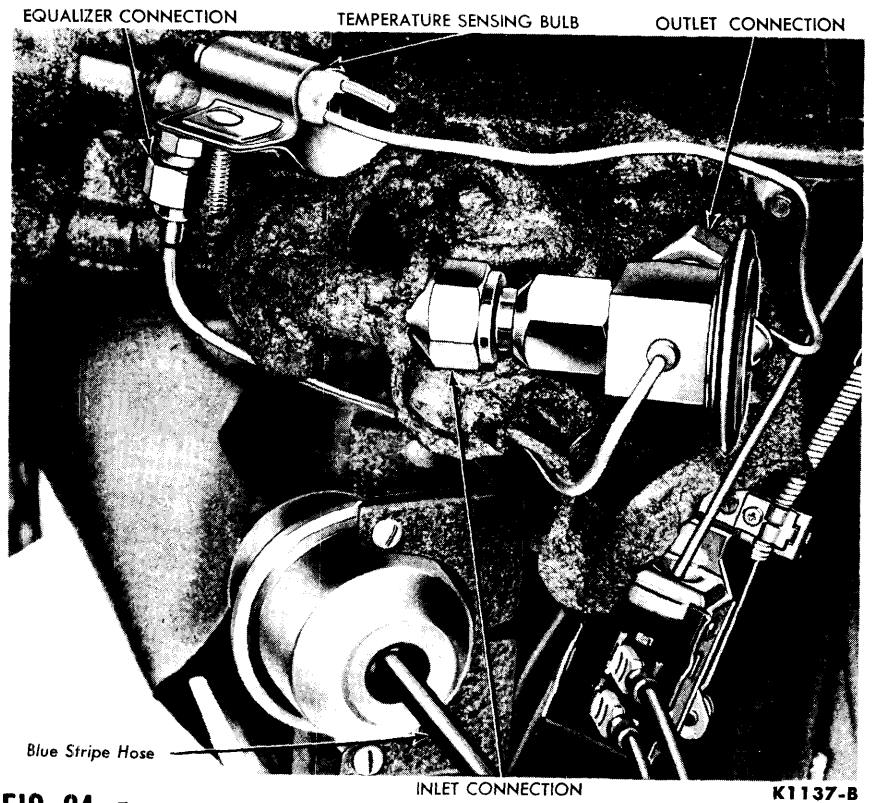

FIG. 24—Evaporator Connections

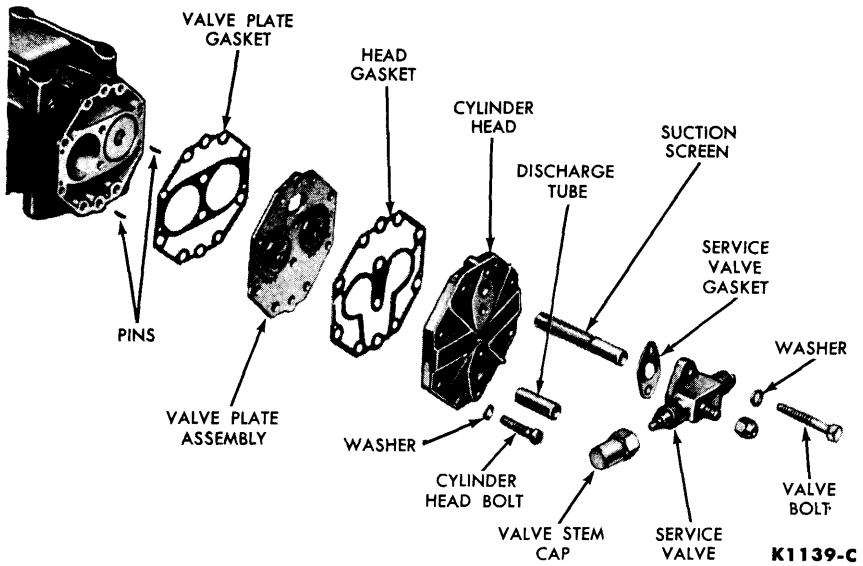

FIG. 25—York Cylinder Head and Valve Assembly

replacement kit which includes the valve plate, valve leaves, and the 2 gaskets (Figs. 25 and 26).

5. When the valve plate assembly is reused, wash it in clean solvent and dry in dry air. Check the oil for dirt. If the system is not clean, replace the oil.

6. Starting with the valve plate gasket, assemble the parts in the order shown in Figs. 25 and 26. Insert the cylinder head bolts carefully to avoid damaging the gaskets.

7. Tighten all bolts finger tight, then torque the bolts ¼ turn at a time to 12-16 ft-lbs.

8. Connect the compressor into the system. Check the oil level in the compressor, and add or remove oil if necessary (page 10-21).

SERVICE VALVE REPLACEMENT

Discharge the refrigerant from the system. Remove the refrigerant hoses from the valves. Remove the attaching screws, fittings and gaskets.

Install the necessary replacement parts as shown in Figs. 25 and 26. If the strainer in the low pressure service valve fitting is not being replaced, clean it before installation.

MAGNETIC CLUTCH REPLACEMENT

1. Energize the clutch and loosen and remove the clutch mounting bolt.

2. Install a ⅝-11 bolt in the clutch drive shaft hole. With the clutch still energized, tighten the bolt to loosen the clutch from the shaft.

3. Disconnect the clutch wire and remove the clutch and drive belt.

4. Make certain that there are no burrs or dirt on the compressor shaft. Then install the key, belt, and clutch.

5. Install the clutch mounting bolt and washer. Energize the clutch, and torque the bolt to 18-22 ft-lbs.

6. Adjust the belt tension.

CRANKSHAFT SEAL REPLACEMENT

1. Remove the magnetic clutch, belt, and the slip ring brush assembly, if used.

2. Remove the remaining seal plate bolts, and remove the plate and gasket.

3. Remove the carbon seal ring and seal housing assembly from the crankshaft. A disassembled view of the crankshaft seal assembly is shown in Figs. 27 and 28.

4. Clean all old gasket material from the seal plate and the compressor. Make certain that the shaft, seal plate, and compressor gasket surfaces are completely clean before installing the new seal.

5. Lubricate the new shaft seal parts in clean compressor oil, and position the seal assembly on the crankshaft, with the carbon ring toward the seal plate. **Use only the applicable seal for the York and Tecumseh compressors as they should not be interchanged.**

6. Position the new gasket on the compressor and install the seal plate, attaching the slip ring brush assembly with 2 of the seal plate bolts, if used.

7. Torque the bolts to 6-9 ft-lbs, and connect the clutch wire.

8. Install the magnetic clutch.

BELT REPLACEMENT

1. Loosen the 4 compressor mounting bolts.

2. Slide the compressor toward the center of the car and remove the belt.

3. Place the new belt in position, slide the compressor toward the outplate and compressor gasket surfaces side of the car and tighten the 4 mounting nuts.

4. Adjust the belt for proper tension (page 10-22).

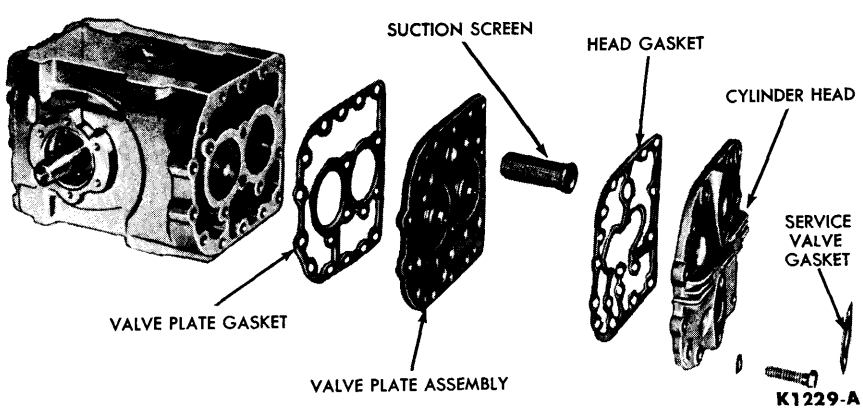

FIG. 26—Tecumseh Cylinder Head and Valve Assembly

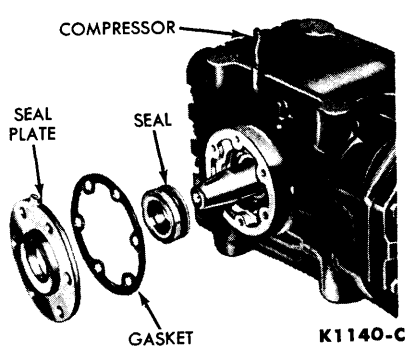

FIG. 27—York Crankshaft Seal Assembly

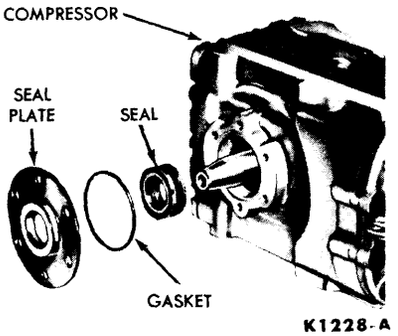

FIG. 28—Tecumseh Crankshaft Seal Assembly

COMPRESSOR REPLACEMENT

1. Isolate the compressor and disconnect the 2 service valves and hoses from the compressor.

2. Remove the magnetic clutch

3. Disconnect the clutch wire at the bullet connector.

4. Loosen and remove the compressor mounting bolts, and remove the compressor.

5. With the compressor on the work bench, remove the key from the shaft.

6. Carefully remove any rust, oil, burrs or dirt that may be on the new compressor shaft. Then install the key in the shaft.

7. Clean any oil from the clutch shaft bore; mount the clutch on the shaft and install the mounting screw and washer finger tight.

8. Place the compressor on the mounting bracket and install the 4 mounting bolts finger tight.

9. Connect the clutch wire, energize the clutch and torque the clutch mounting bolt to 18-22 ft-lbs. **If the new compressor was shipped with a bolt and washer in the end of the crankshaft, remove and discard the bolt and use a bolt with a nylon insert in it.**

10. Install and adjust the drive belt (page 10-22), and tighten the mounting bolts.

11. Install the service valves on the compressor (Fig. 29), using new gaskets. Leak test the compressor, then evacuate it and connect it back into the system.

12. Check the oil level in the compressor and add or remove oil if necessary. Follow the procedure as given on page 10-21.

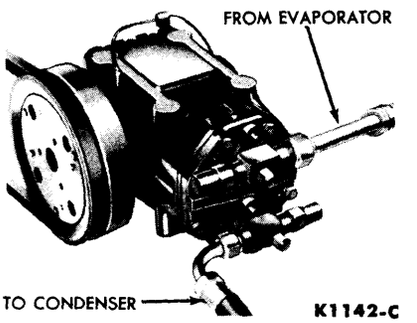

FIG. 29—Compressor Hose Connections

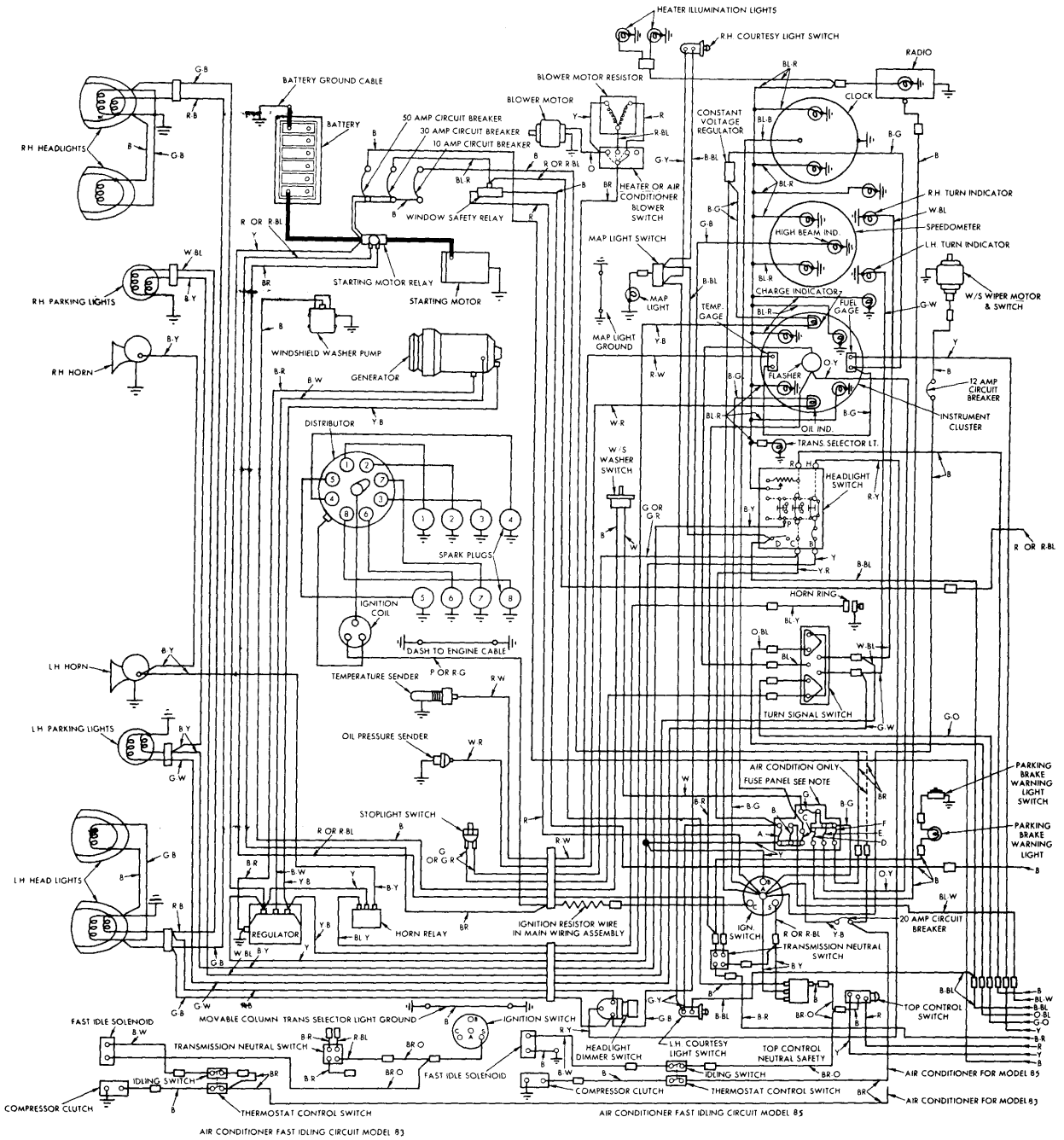

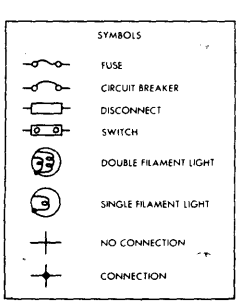

NOTE

FUSE RATING		CIRCUIT PROTECTION
A	15 AMP	DOME, PARK, TAIL, STOP AND INSTRUMENT PANEL LIGHTS
B	15 AMP	CIGAR LIGHTER, LUGGAGE COMPARTMENT LIGHT
C	1 AMP	CLOCK
D	7.5 AMP	RADIO
E	14 AMP	TURN SIGNAL, BACK-UP LIGHTS
F	14 AMP	HEATER
G	14 AMP	WINDSHIELD WASHER

K1319-A

FIG. 1—Electrical Wiring Diagram

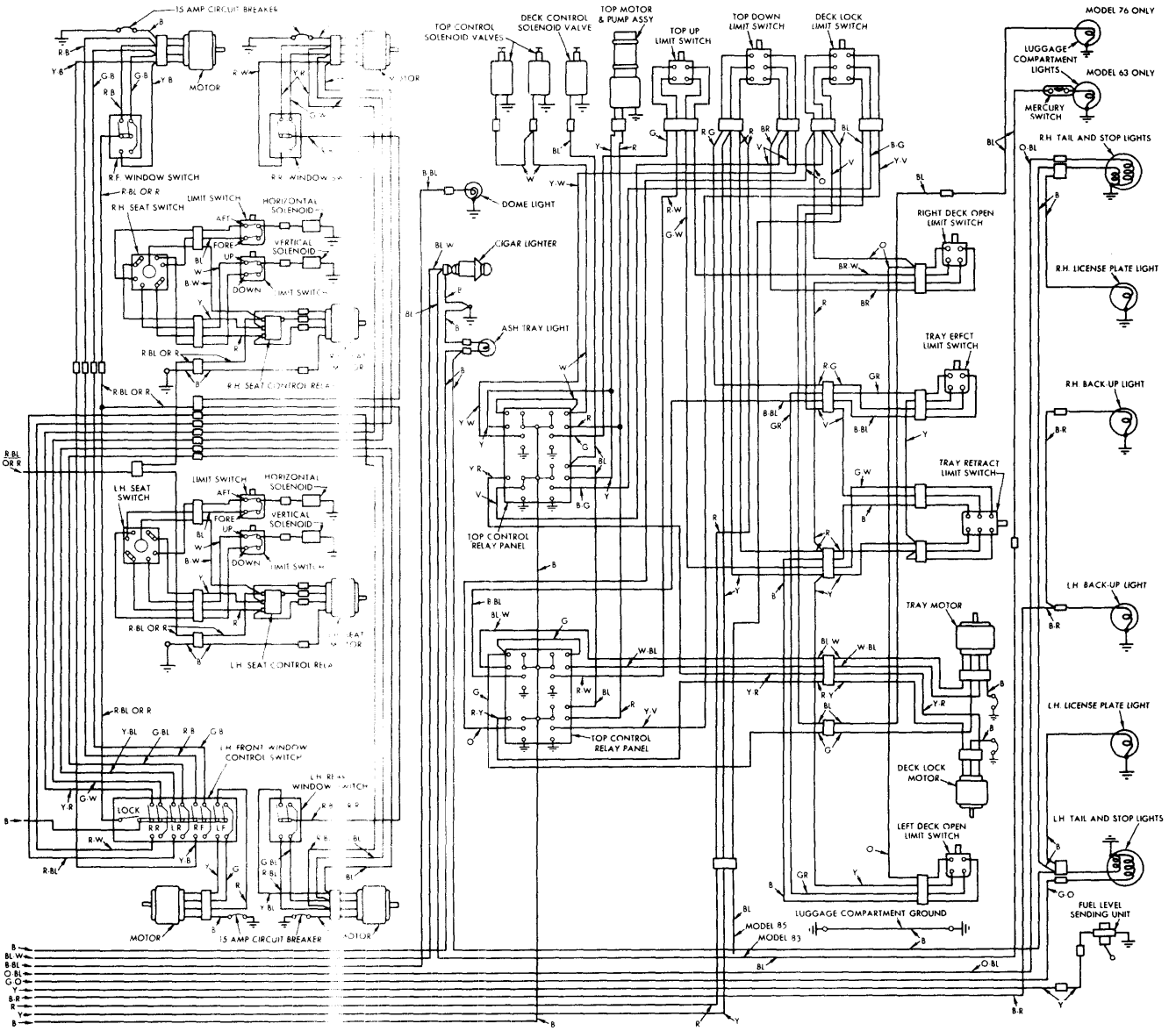

COLOR KEY

B	— BLACK	BL B	BLUE BLACK STRIPE	G	— GREEN	O	— ORANGE	R G	— RED-GREEN STRIPE	Y	— YELLOW
B-BL	— BLACK-BLUE STRIPE	BL R	BLUE RED STRIPE	G B	— GREEN-BLACK STRIPE	O BL	— ORANGE-BLUE STRIPE	R W	— RED-WHITE STRIPE	Y B	— YELLOW-BLACK STRIPE
B G	— BLACK-GREEN STRIPE	BL W	BLUE WHITE STRIPE	G BL	— GREEN-BLUE STRIPE	O Y	— ORANGE-YELLOW STRIPE	R Y	— RED-YELLOW STRIPE	Y BL	— YELLOW-BLUE STRIPE
B R	— BLACK-RED STRIPE	BL Y	BLUE YELLOW STRIPE	G O	— GREEN-ORANGE STRIPE	P	— PINK	V	— VIOLET	Y R	— YELLOW-RED STRIPE
B W	— BLACK-WHITE STRIPE	BR	BROWN	G W	— GREEN-WHITE STRIPE	R	— RED	W	— WHITE	Y V	— YELLOW-VIOLET STRIPE
B Y	— BLACK-YELLOW STRIPE	BR O	BROWN ORANGE STRIPE	G Y	— GREEN-YELLOW STRIPE	R B	— RED-BLACK STRIPE	W BL	— WHITE-BLUE STRIPE	Y W	— YELLOW-WHITE STRIPE
BL	— BLUE	BR W	BROWN WHITE STRIPE	GR	— GREY	R BL	— RED-BLUE STRIPE	W R	— WHITE-RED STRIPE		

K1320-A

PART 10-4 SPECIFICATIONS

FUSE AND CIRCUIT BREAKER CHART

Circuit	Protective Device	Location
Clock	1AG-1-Fuse	Fuse Block
Cigar Lighter	Sulphur Disc	Back of Lighter Socket
Back-Up Lamps	SFE-14	Fuse Block
Head Lamps	Circuit Breaker	Integral with Headlight Switch
Auxiliary Lamps (Park, Tail, Dash, Stop, and Interior)	3AG-15	Fuse Block
Turn Signals	SFE-14	Fuse Block
Radio	SFE-7.5	Fuse Block
Heater Blower	SFE-14 Fuse	Fuse Block
Power Seats	Circuit Breaker	Integral with Starter Motor Relay
Power Windows	(5) Circuit Breakers	Integral with Starter Motor Relay (1) Right and Left Cowl Panel (2) On Floor Panel at Right and Left Rear Quarter (2)
Air Conditioning	Circuit Breaker	Lower Instrument Panel Reinforcement
Convertible Top Control		
Power Circuit	Circuit Breaker	Starter Relay
Control Circuit	Circuit Breaker	Right Hand Air Deflector
Ground Circuits		
Luggage Compartment Lock Motor	Circuit Breaker	Luggage Compartment Door Panel
Upper Back Panel Motor	Circuit Breaker	Luggage Compartment Door Panel
Instrument Panel Rheostat	AGW4 Fuse	Cartridge in Feed Wire
Windshield Washer Pump	SFE-14	Fuse Block
Windshield Wiper Motor	Circuit Breaker	Instrument Panel—Lower Left

BULB CHART

Unit	Candle Power or Wattage	Trade No.
Headlamp—No. 1 (Inner)	37.5w	4001
Headlamp—No. 2 (Outer)	50/37.5w	4002
Front Turn Signal/Parking	32/4 c.p.	1034
Rear Turn Signal & Stop/Tail	32/4 c.p.	1034
Stop/Tail Only	32/4 c.p.	1034
License Plate	4 c.p.	67
Back-up Lamps	21 c.p.	1141
Spot Lamp	30w	4405
Luggage Compartment	6 c.p.	89
Dome Lamp	15 c.p.	1003
Instrument Panel Indicators:		
Hi Beam	2 c.p.	57
Oil Pressure	2 c.p.	57
Generator	2 c.p.	57
Turn Signal	3 c.p.	1816
Parking Brake Warning	2 c.p.	257
Illumination:		
Speedometer	3 c.p.	1816
Cluster	2 c.p.	57
Ash Receptacle/Glove Compartment	1.5 c.p.	1445
Cigarette Lighter Socket & W/S Wiper	2 c.p.	57
Heater Control	2 c.p.	57
Heater & A/C Control	2 c.p.	57
Clock	3 c.p.	1816
Ignition Key & Lighting Switch	2 c.p.	57
Radio Dial	1.9 c.p.	1893
Courtesy and/or Map	6 c.p.	89
Automatic Transmission Control	1.5 c.p.	1445

INSTRUMENT VOLTAGE

Fuel and Temperature Gauges—Average Voltage at Gauge Terminals	5 v

STOP LIGHT SWITCH

Operating Pressure	60-110 psi

SPEEDOMETER GEAR—REAR AXLE—TIRE SIZE COMBINATIONS

Tire Size	8.00 x 14-4	
Rear Axle Ratio	Teeth in Drive Gear	Teeth in Driven Gear
3.00:1	8	18

HORN

Horn Current Draw at 12 v	9.0-10.0 Amperes

AIR CONDITIONER CURRENT DRAW

At Slow Speed	6-7 Amperes at 12 volts
At Fast Speed	13-14 Amperes at 12 volts

TURN INDICATOR

Current Draw at 12 v	0-4 Amperes

HEATER MOTOR CURRENT DRAW

At Low Speed	2-3 Amperes at 12 volts
At Medium Speed	3-5 Amperes at 12 volts
At Fast Speed	6-8 Amperes at 12 volts

1962 FORD THUNDERBIRD SHOP MANUAL

GROUP 11

BODY

		PAGE
PART 11-1	BODY MAINTENANCE AND REPAIR	11-2
PART 11-2	FRONT SHEET METAL AND BODY TRIM	11-15
PART 11-3	DOOR, WINDOWS, AND DECK LID	11-29
PART 11-4	CONVERTIBLE TOP	11-39
PART 11-5	SPECIFICATIONS	11-58

PART 11-1

BODY MAINTENANCE AND REPAIR

Section	Page
1. General Maintenance	11-2
2. Hoisting	11-2
3. Body Repairs and Sealing	11-3

1 GENERAL MAINTENANCE

BODY TUNE-UP

Most rattles are caused by a loose bolt or screw. Foreign objects such as nuts, bolts, or small pieces of body deadener in the door wells, pillars, and quarter panels are often the source of rattles. Door wells can be checked by carefully striking the underside of the door with a rubber mallet. The impact made by the mallet will indicate if loose objects are in the door well.

All bolts and screws should be tightened periodically. In the event that tightening the bolts and screws, located on such assemblies as the doors, hood, and deck lid, does not eliminate the rattles, the trouble is probably caused by misalignment. If this is the case, follow the adjustment and alignment procedures for these assemblies.

Rattles and squeaks are sometimes caused by weatherstripping and anti-squeak material that has slipped out of position. Apply additional cement or other adhesive, and install the material in the proper location to eliminate this difficulty.

Drain holes, located on the underside of each rocker panel, quarter panel, and door, should be cleared periodically.

A regular body tune-up preserves the car's appearance and reduces the cost of maintenance during the life of the car. The following steps are suggested as a guide for a regular body tune-up:

1. Vacuum the interior thoroughly and wash the car.

2. Check all openings for water leaks, and seal where necessary.

3. Cement all loose weatherstrips which are still usable. Apply silicone lubricant to the weatherstripping.

4. Replace all door and deck lid weatherstrips which are unfit for service.

5. Replace all cracked, fogged, or chipped glass.

6. Align hood, doors, and deck lid if necessary.

7. Inspect windshield wiper blades and replace if necessary.

8. Tighten sill plate and garnish moulding screws.

9. Clean the seats, door trim panels, and headlining. If the seats are worn or torn, install seat covers, or reupholster.

10. Touch-up or paint chipped or scratched areas.

EXTERIOR AND INTERIOR CLEANING

EXTERIOR CLEANING

The outside finish should be frequently washed. Never wipe the painted surfaces with a dry cloth. Dusting the finish when it is dry tends to rub the dust and dirt into the baked enamel, and leaves a sandpaper effect on the surface. To keep the finish bright and attractive, and eliminate the necessity of using polish, wash the car whenever it has accumulated a moderate amount of dirt and road salt.

The bright metal parts of the car require no special care. Periodic cleaning will preserve the beauty and life of these finishes. Wash with clear water or if the parts are very dirty use a mild soap. Using a clean soft cloth or a sponge and water, rinse and wipe the parts dry. FoMoCo Chrome Cleaner may be used sparingly to remove rust or salt corrosion from chrome plated parts. Do not scour chrome finished parts with steel wool or polish them with products containing abrasives. A FoMoCo Polish will provide excellent protection for all bright metal parts.

INTERIOR CLEANING

Use a broom or a vacuum cleaner to remove dust and dirt from the upholstery or floor covering. Vinyl and woven plastic trim that is dusty can usually be cleaned with a damp cloth.

Dirty or stained upholstery can be cleaned with FoMoCo Interior Trim Cleaner. This cleaner may be used on leather, plastic, vinyl, imitation leather, fabric upholsteries, rubber mats, and carpeting. Be sure to follow the directions on the cleaner container.

2 HOISTING

DRIVE-ON TYPE HOIST

To prevent possible damage to the underbody, do not drive the car onto the drive-on type hoist without first checking for possible interference between the upright flanges of the hoist rails and the underbody. Should there be interference, the hoist flanges should be modified as necessary and/or the approach ramps built up to provide the needed clearance.

RAIL TYPE (FREE WHEELING) HOIST

FRONT

The front adapters or hoist plates must be carefully positioned in contact with the lower suspension arms to assure safe, secure lifting.

Do not allow the hoist adapter to contact the steering stop.

REAR

The hoist adapters must be positioned carefully under the rear axle to prevent damage to the shock absorbers and brake lines when the car is raised. The hoist rails should be raised slowly and the position of the adapters checked.

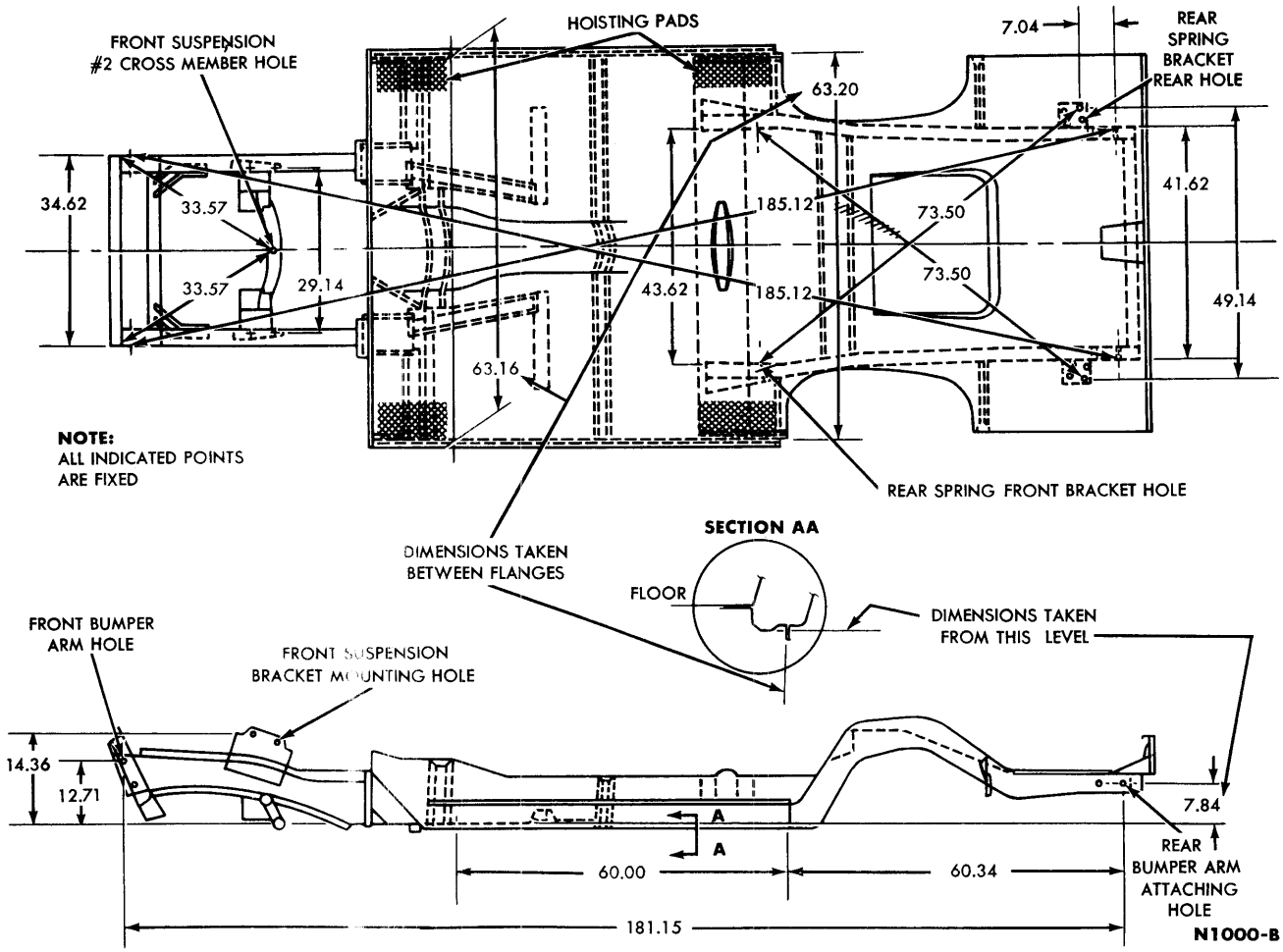

FIG.1—Thunderbird Underbody Dimensions

FORK LIFT (TWIN POST) HOIST

FRONT

To assure safe hoisting, the front post adapters must be positioned carefully to contact the lower suspension arms.

REAR

To prevent damage to the shock absorbers, the rear forks must contact the axle at points not farther outboard than one inch from the circumference welds near the differential housing. Carefully raise the rear post and check the position of the fork.

FRAME CONTACT HOIST

Frame contact hoist adapters are necessary to lift the car. The hoist adapter pads should each cover at least 24 square inches of underbody area. Figure 1 shows recommended contact points.

JACKING

When a stationary floor jack or a roll jack is to be used, there are several specific recommended points of contact. Either side of the car may be raised at the front by jack contact at either lower control arm. **Raise the car by contacting a lower arm only when the jack saddle is large enough to accommodate the control arm securely.** Either side of the front end of the car may also be raised by jack pressure on the front cross member, or on the cross member to which the stabilizer is connected.

Either side of the rear end of the car may be raised by jack pressure on the rear cross member. Do not put pressure on the fuel tank.

To raise the car with a bumper jack, position the jack hook on the bumper so that the lip of the hook engages the notch in the lower edge of the bumper.

The convertible deck lid must be closed to properly position the jack on the rear bumper.

3 BODY REPAIRS AND SEALING

BODY ALIGNMENT

Servicing the unitized body should not present any unusual difficulties or necessitate additional equipment other than that required for the conventional frame and body repair. The application of heat and the use of heavy duty jacks must be carefully controlled because of the difference in the gauge of the metal in the subframe of a unitized body and the stress points developed in a single welded unit construction. It is possible to pull damaged areas back into alignment with the use of light-weight

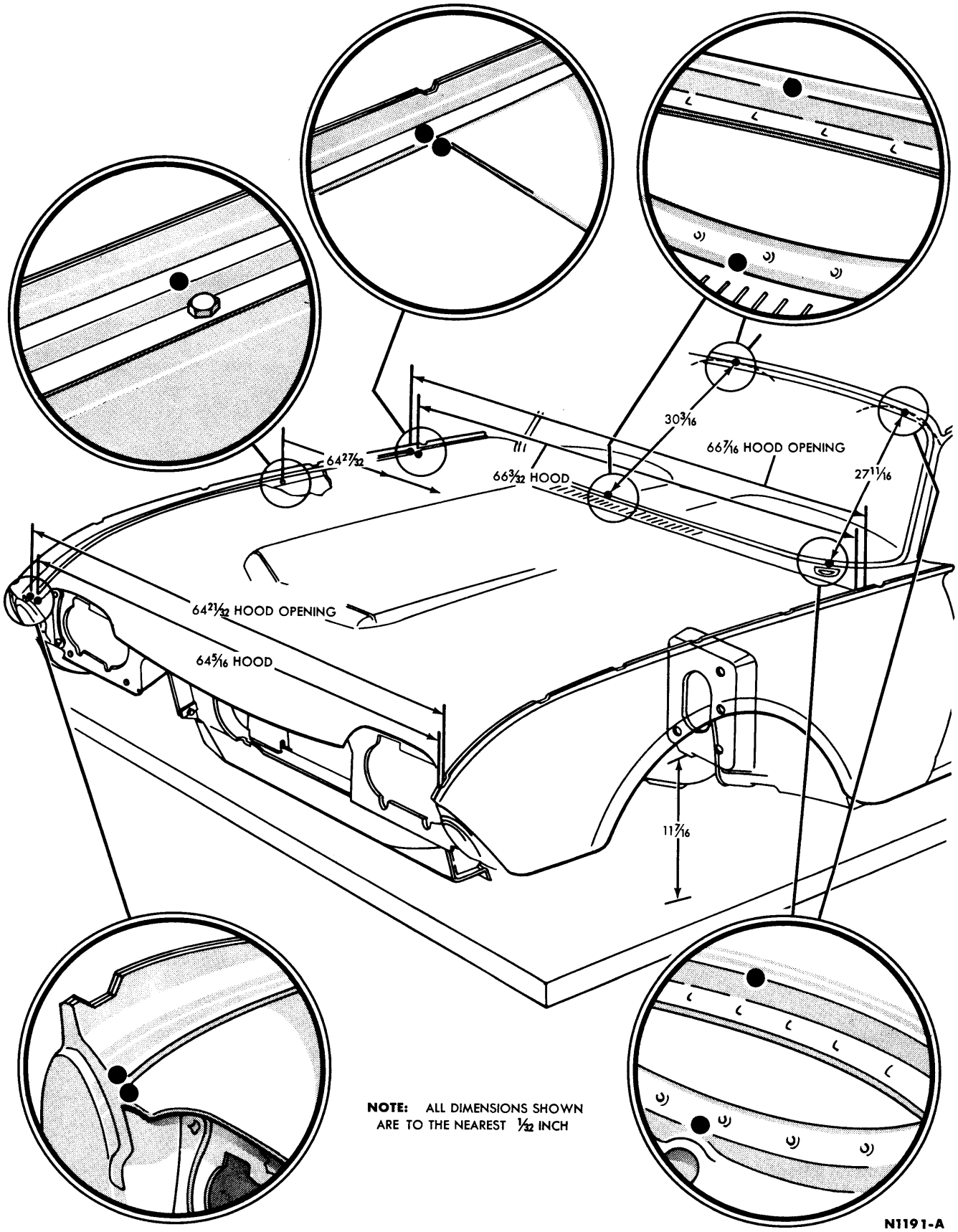

FIG. 2—Hood and Windshield Opening Dimensions

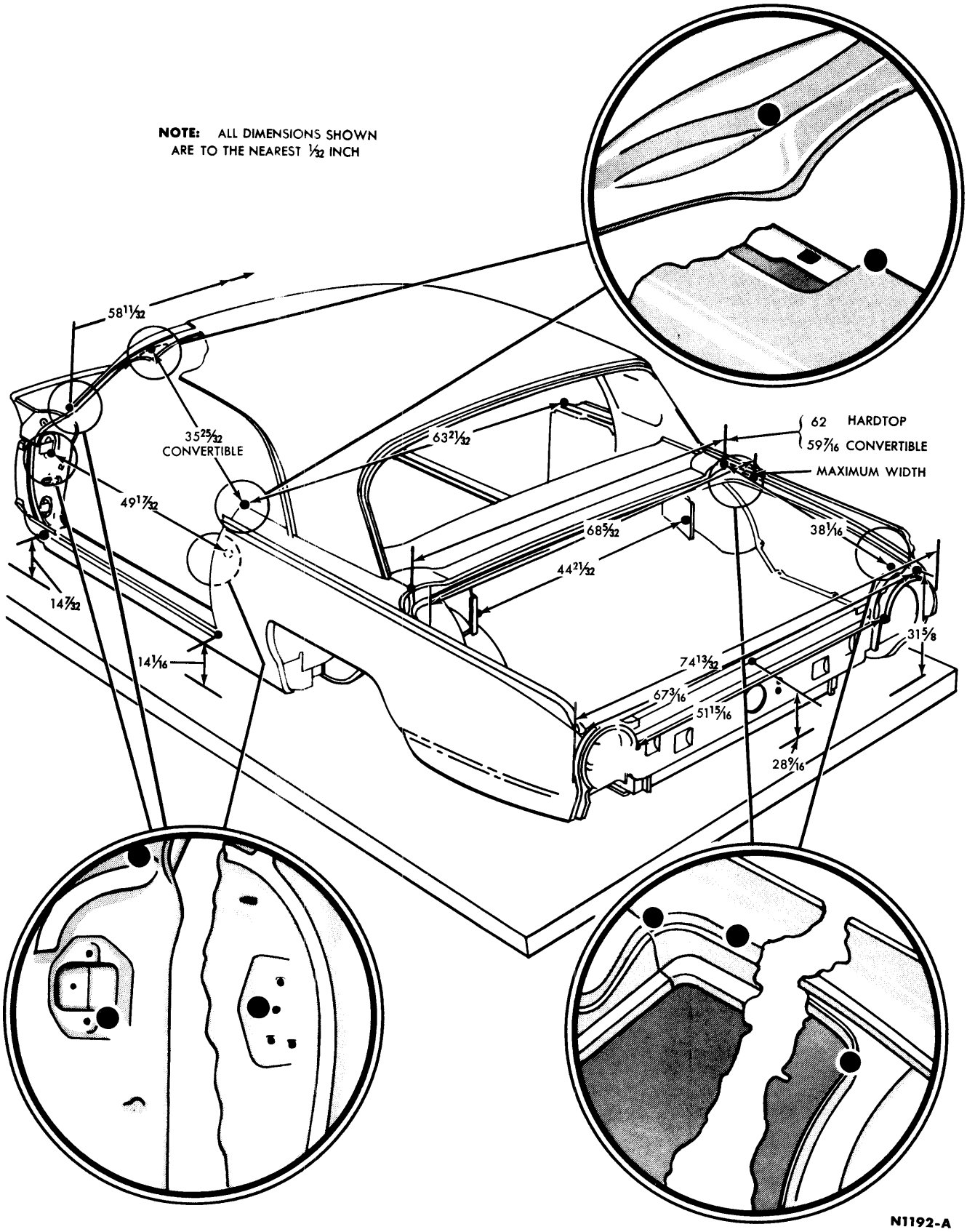

FIG. 3—Door and Deck Lid Opening Dimensions

jacks and hydraulic equipment without heating the metal.

Rough out badly damaged areas before taking measurements for squaring up a body. If necessary, remove the glass from the damaged area to prevent damage. In severe cases, reinforcement brackets and other inner construction may have to be removed or cut to permit restoration of the outer shell and pillars without excessive strain on the parts. Straighten, install, and secure all such parts in place before attempting to align the body.

In cases of severe or sharp bends, it may be necessary to use heat. Any attempt to cold-straighten a severely bent bracket may cause ruptures of the welds and may also cause cracks in the bent part. Never heat the area more than a dull red.

CHECKING BODY FOR MISALIGNMENT

To align or square up a body, take two opposite diagonal measurements between pillars. Use a measuring tram for these measurements. Take the measurements between reference points such as crease lines or weld joints which are diagonally opposite each other on the two pillars being measured. Since all measurements should be made from the bare metal, remove all interior trim from the checking points.

In some cases, it is difficult to obtain proper body alignment when repairing a body that is damaged on both sides. In these cases, refer to Figs. 2 and 3.

Do not attempt to correct any serious misalignment with one jacking operation. This is particularly true if other sections of the body also require aligning. Align each section proportionately until the proper dimensions are obtained.

Door openings are checked in the same manner as the body. Horizontal, vertical, and diagonal checking points are established on all four sides of the door opening that is being measured.

The dimensions of the sub-frame must be restored in the repair of major body damage, to provide correct front and rear wheel geometry. Fig. 1 shows the dimensions for aligning the underbody assembly. All the dimensions are detailed to the center line of existing holes in the underbody assembly. Once the frame and suspension members are properly aligned, the balance of the repair can be performed.

PANEL REPAIR

With proper equipment, an experienced body repair man can repair a damaged area in a body panel by one of three methods:

1. External or surface damage that can be bumped out or refinished.
2. External damage that can be repaired by removing a complete panel and installing a service panel.
3. Extensive damage necessitating the removal of the outer panels and the realignment or replacement of sections of the sub-frame. **When performing repairs of this type, measure sufficient overlap to assure an adequate area for a strong welded surface.**

In cases where only a portion of a panel requires replacement, a section of a service panel can be used (Figs. 5 thru 8). Complete service panels are available if the area is extensively damaged.

If a complete panel requires replacement, refer to Figs. 9 thru 11 which show some of the hidden weld joints and sealer locations.

REPAIRING UNDERCOATED SHEET METAL

When repairing undercoated sheet metal, rough out the damaged portion, and apply moderate heat to the outside of the panel. This will soften the undercoating so that it can be scraped off with a putty knife. Remove any remaining material with a solvent.

Apply undercoating to the repaired metal with a putty knife or paint brush. Do not apply heat on freshly applied undercoating.

PANEL REPAIR PROCEDURE

The following procedure is one of several methods that can be used for cutting out and replacing a portion of the quarter panel. Although this procedure is used here for quarter panel repairs, it can be applied to other sections of the body as well.

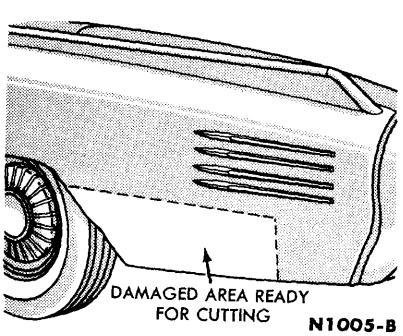

FIG. 4—Damaged Area Ready for Cutting

Rough out and shape as much of the damaged area as possible. Measure the piece of metal to be cut out (Fig. 4). This measurement should be taken from a definite point, such as a moulding or bead.

Make the corresponding measurements on the service panel. Be sure measurements are taken from the same points. Scribe a line around the area to be cut from the service panel (preferably straight-line cuts).

Drill a ¼-inch hole at any one corner of the scribed line as a starting point for cutting. Use a suitable cutting tool and cut the new piece out along the scribed line.

Straighten the edge of the piece that was cut out, and position it over the damaged area as a template. Secure the cut-out section of the service panel over the damaged area of the body, and scribe a line around the panel. Cut out the damaged area.

If the piece to be replaced is at the pillar post or at any point where the panel is spotwelded to other parts of the body, such as the body side reinforcement lower edge or wheelhousing assembly, the damaged piece should be split at the weld if possible. To split a spotweld, drive a sharp chisel between the two pieces of metal at the weld. In difficult cases, a spotweld may be split by drilling a ¼-inch hole into the center of the weld.

Straighten the cut edge of the panel. Fit the service panel portion into the cut-out area in the body panel. Be sure that the two panels do not overlap. Tack-weld at intervals, let the metal cool, and make a continuous weld around the two pieces. Wet asbestos putty may be used to prevent the heat from traveling. Weld about six inches at a time. Stagger the welds to prevent excessive distortion.

Hammer the weld below the contours of the surface not more than 1/16-inch with a grooving dolly.

Metal-finish the repair area and file it smooth, taking care to produce the correct contour.

Grind the welded area clean, and tin.

Fill in with solder, taking care that sufficient solder is applied so that the final metal finish will not have indentations.

Metal-finish the panel to prepare it for painting.

SEALING

DUST AND WATER LEAKS

The forward motion of the car creates a slight vacuum within the

body, particularly if a window or ventilator is partially open. Any unsealed crevice or small opening in the lower section of the body will permit air to be drawn into the body. If dust is present in the air, it will follow any path taken by the air from the point of entry into the passenger and luggage compartments. Opening the fresh air outlets will equalize these pressures. Dust may work its way into the hollow, box-type, rocker panel which extends along the edge of the floor below the doors. Dust accumulates in the rocker panel, and may eventually work its way to the rear body pillar or kick-up, and follow the contour of the wheelhouse into the luggage compartment.

To eliminate dust leakage, determine the exact point at which the dust enters. As explained previously, the point of entry is often deceptive in that the dust may enter at one point and then follow the passages formed by interior trim.

Under certain conditions, water can enter the body at any point where dirt or dust can enter. Any consideration of water leakage must take into account all points covered under dust leaks.

Dust and/or water leaks may result from missing or improperly installed plugs and grommets. These are used in the underbody and the dash panel.

LOCATING DUST LEAKS

To determine the exact location of a dust leak, remove the following trim from the car:

1. Cowl trim panel.
2. Quarter trim panel.
3. Rear seat back and seat cushion.
4. Luggage compartment floor mats, side trim panel, and spare wheel.
5. Scuff plates.

After removing the trim, the location of most leaks will be readily evident. Seal these leaks, and road test the car on a dusty road to make sure all leaks are sealed. The entrance of dust is usually indicated by a pointed shaft of dust or silt at the point of entrance.

After the road test, check for indications of a dust pattern around the door openings, cowl panel, lower part of the quarter panel, and in the luggage compartment.

TYPES OF SEALERS AND APPLICATION

A wide variety of sealers are used by manufacturers. Since it would be difficult to stock all of these sealers, the all-purpose sealers described below have been selected for service use. The method and points of application are given under each sealer type.

Body Sealer B8A-19562-A. This white sealer will not run, is fast drying, and remains semi-elastic. It duplicates the vinyl-type sealer used in assembly. It is easily cleaned up with a dry cloth, followed by solvent if necessary, and provides an

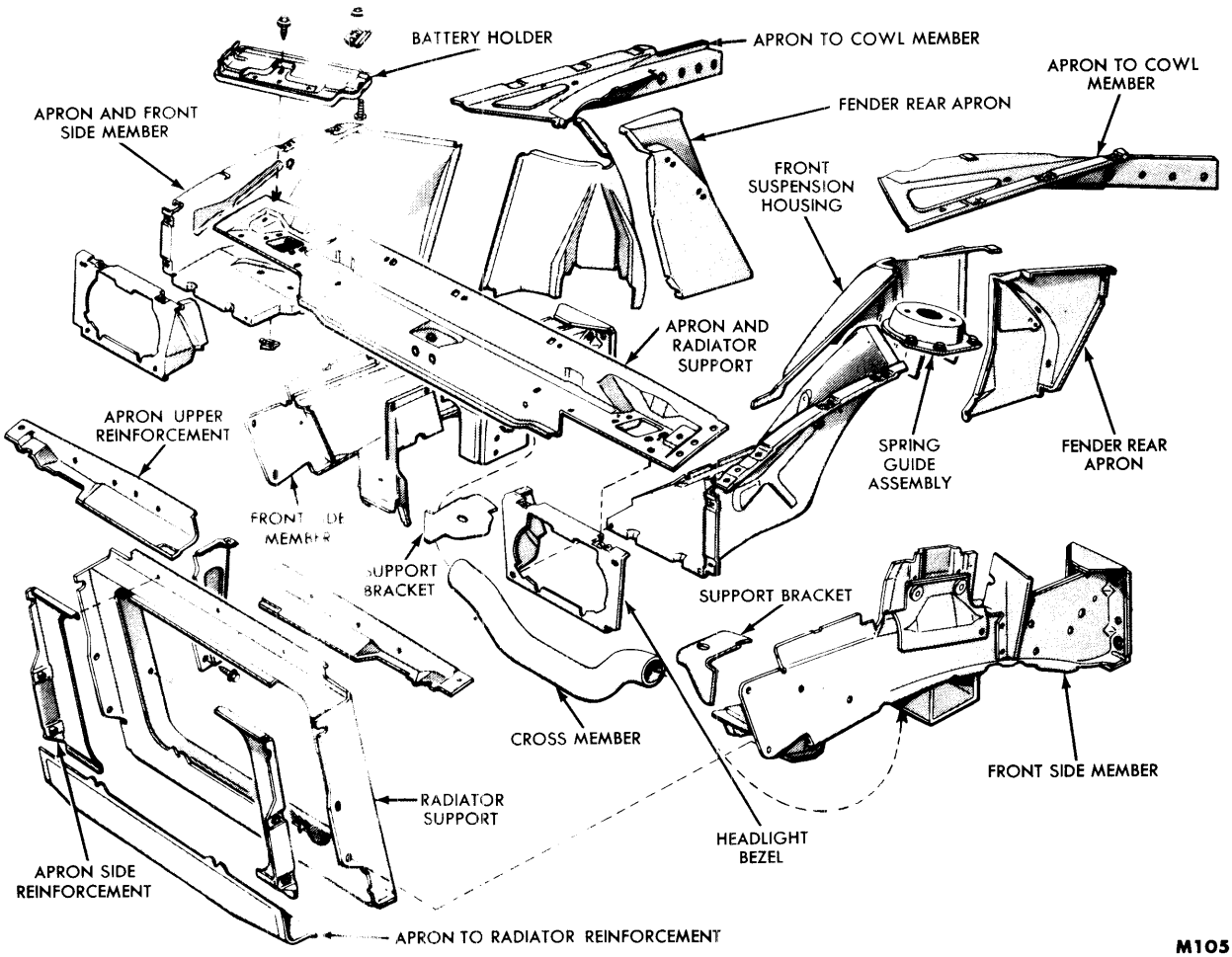

FIG. 5—Front End Assembly

excellent surface for paint. This sealer is used for all seam sealing jobs such as are found in the floor pan, wheelhouse, dash panel, rocker panel, door opening, quarter panel, or drip rail. It is also used to seal trim panel and outside moulding clip holes, and for windshield and back window installation.

Black Caulk and Sealer B6A-19563-B. The combination black caulk and sealer is of the same composition as body sealer, and is used in the same areas. The color is gloss black instead of white, and this sealer is to be used with dark colored paint or in areas that are not visible.

Body Sealer M-5397-B. This sealer has a plastic base with an asbestos filler, is heavy bodied, and is commonly known as "permagum." It is used on spotweld holes, around moulding clips, or between two surfaces not properly sealed by a gasket. Apply the sealer with a putty knife.

M-2G17-A Cement. This cement is recommended for instrument panel safety cover and body panel plastic water shield installation. It is also useful for repair or replacement of other vinyl and rubber trim.

Rubber Cement 8A-19552-B. This rubber cement is a quick-drying, strong, adhesive material. It is designed to cement weatherstripping to doors, bodies, deck lids, cowl ventilators, and the surrounding metal. Windows and windshields which are set in rubber can be effectively sealed against leakage by flowing cement into affected areas.

Clean all grease, dirt, and old sealer from the surfaces to be cemented. Wash the surface thoroughly with a rag moistened with clean gasoline or cleaner's naphtha. For best results, apply a medium coat of cement to both surfaces, allow it to dry until tacky, and press both surfaces firmly together.

Cleaning Solvent B6A-19563-D. A general clean-up solvent is used to clean off cement smears, tars, oils, grease, caulk and sealer. When desired, it can be used to thin caulk and sealer. It is harmless to cured paint, and will be useful in new car pre-delivery.

Silicone Lubricant. This lubricant is to be used on the door window weatherstrips. It is recommended that silicone lubricant be applied to the upper weatherstrips at every regular lubrication period. Its use makes the doors easier to close, avoids weatherstrip squeaks, retards excess weatherstrip wear from chafing between the door glass upper frame and the weatherstrip, and helps to retain door window alignment by reducing friction between the glass frame and rubber weatherstrip.

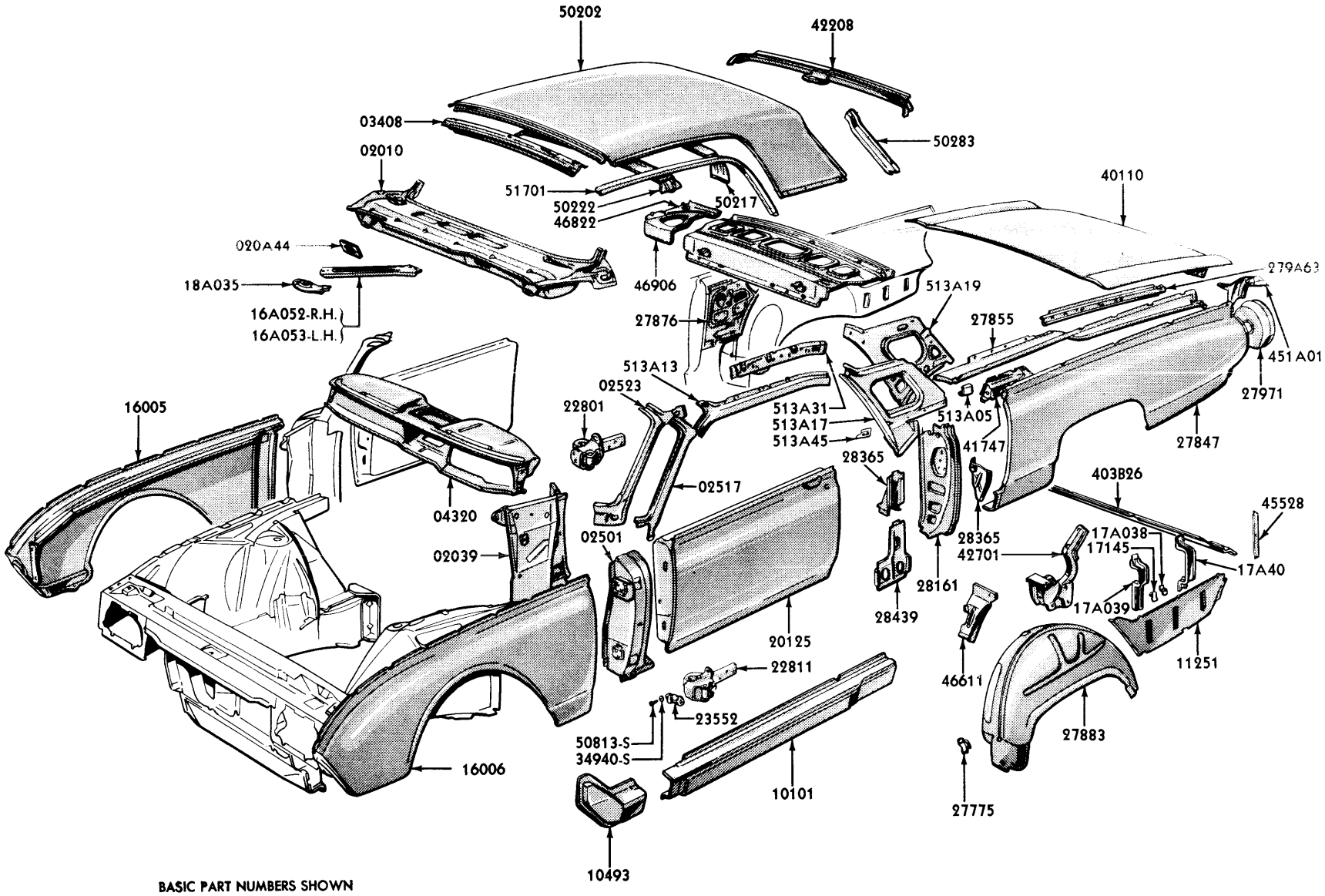

FIG. 6—Thunderbird Upper Body—Hardtop Model

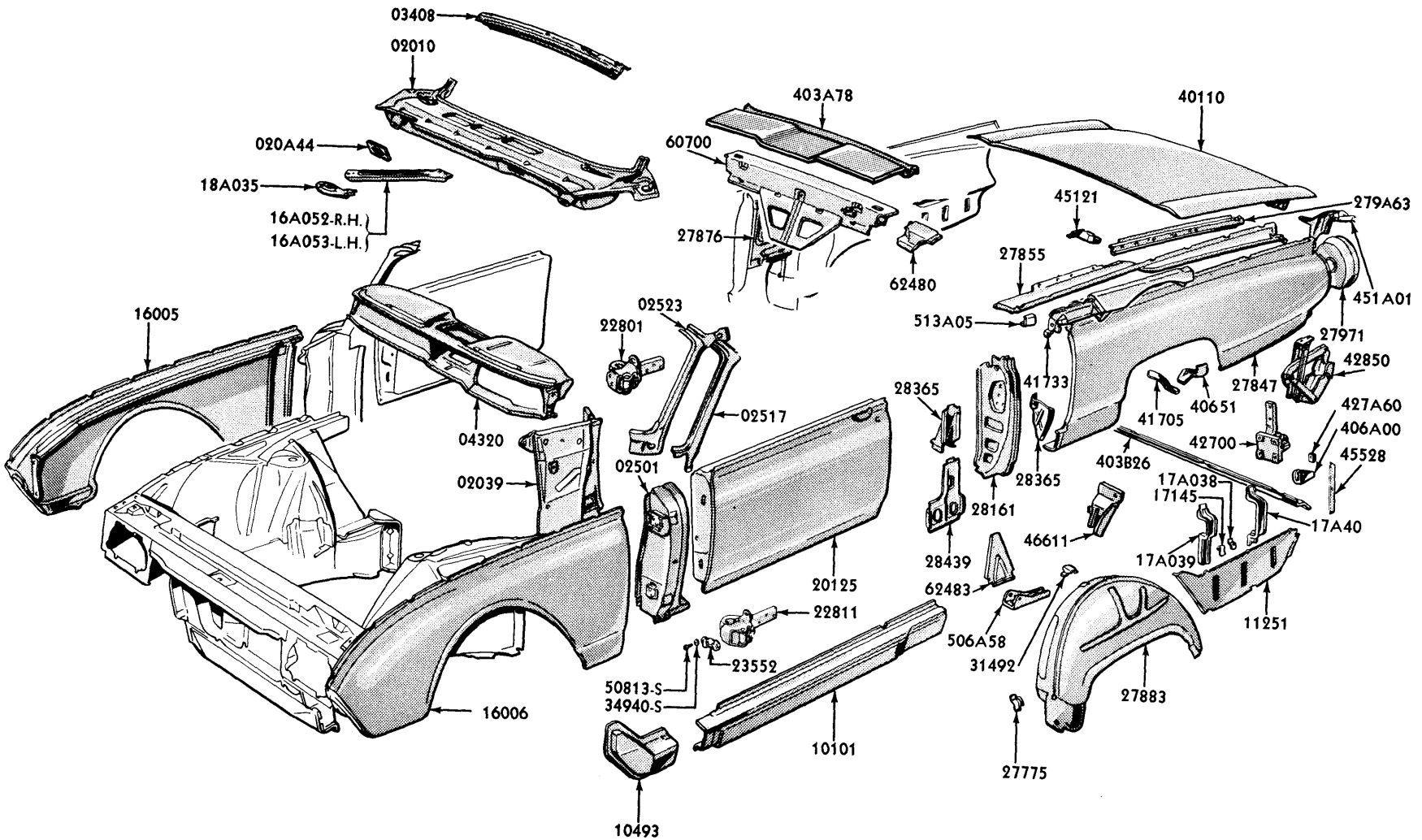

BASIC PART NUMBERS SHOWN

M1067-A

FIG. 7—Thunderbird Upper Body—Convertible Model

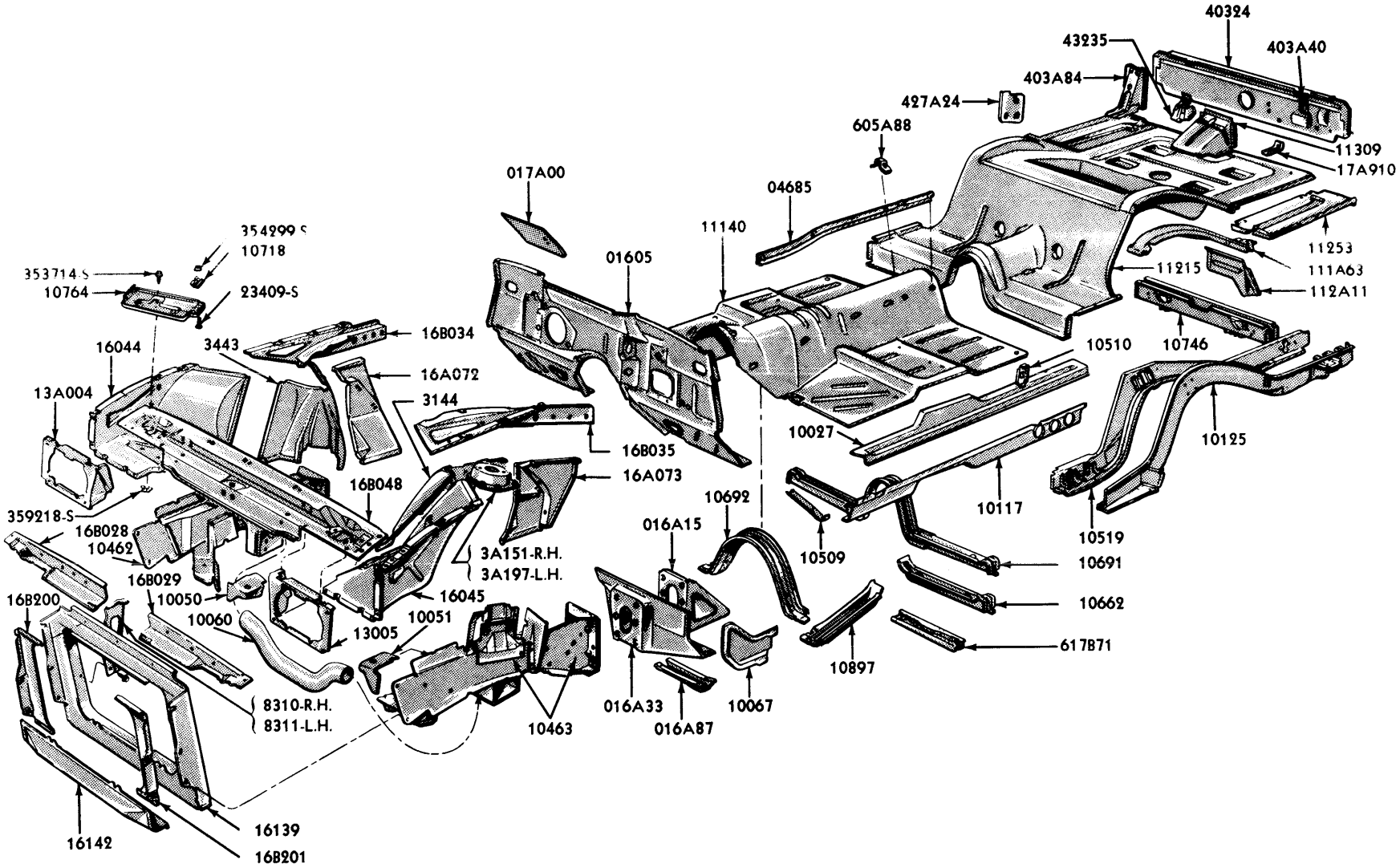

BASIC PART NUMBERS SHOWN

FIG. 8—Thunderbird Underbody

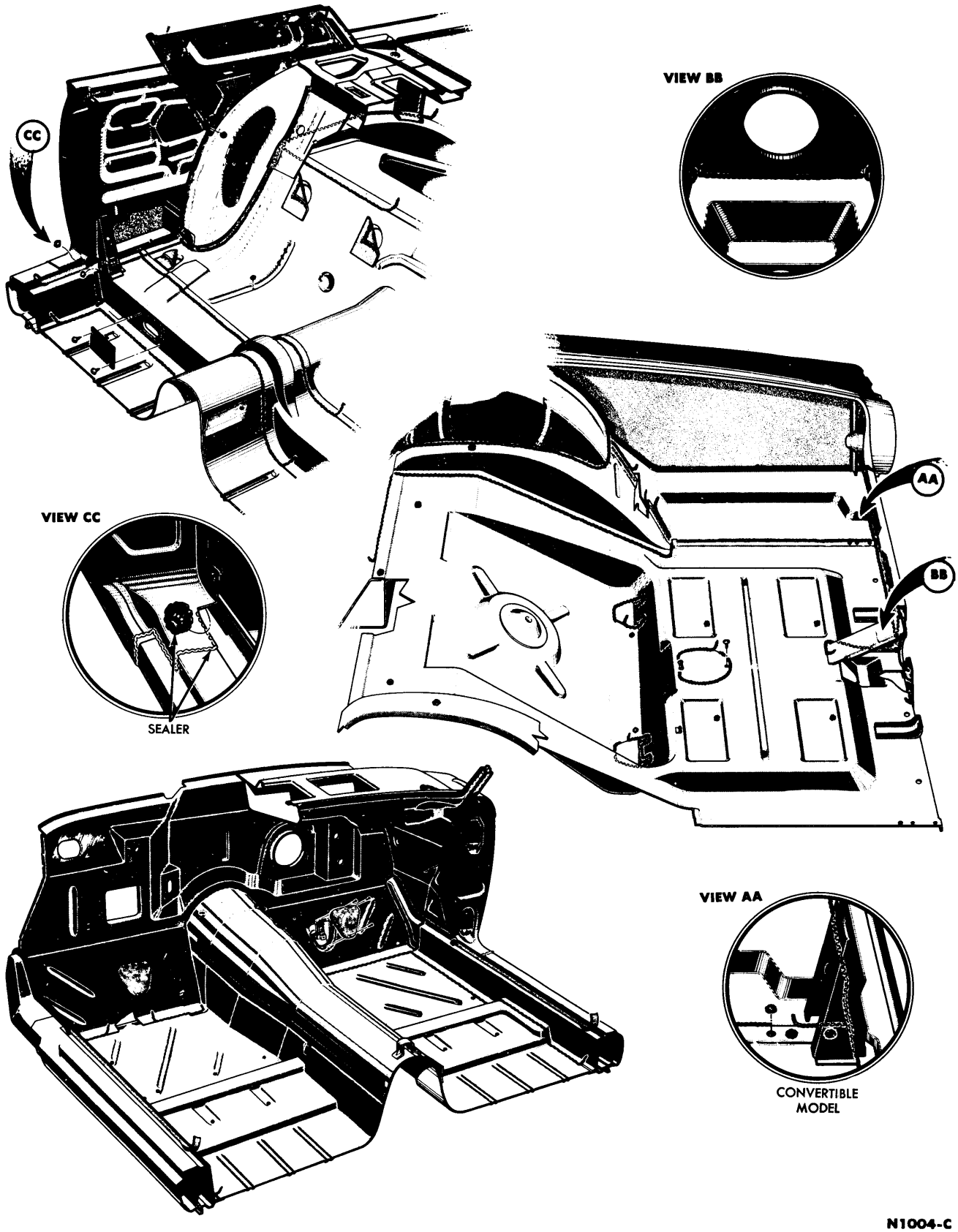

FIG. 9—Sealer Application to Floor Pan, Body Side, and Dash Panel

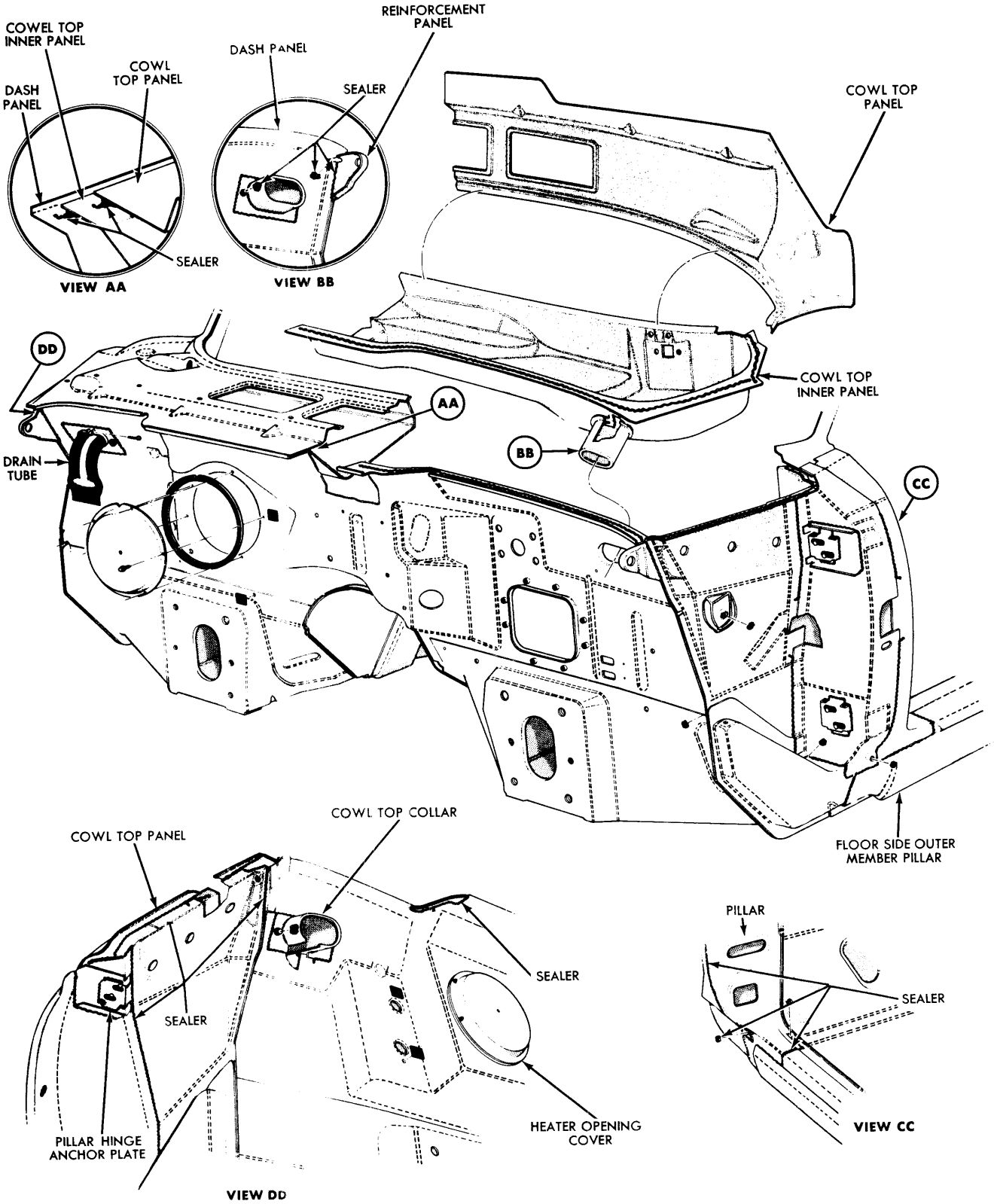

FIG. 10—Cowl Sealer Application

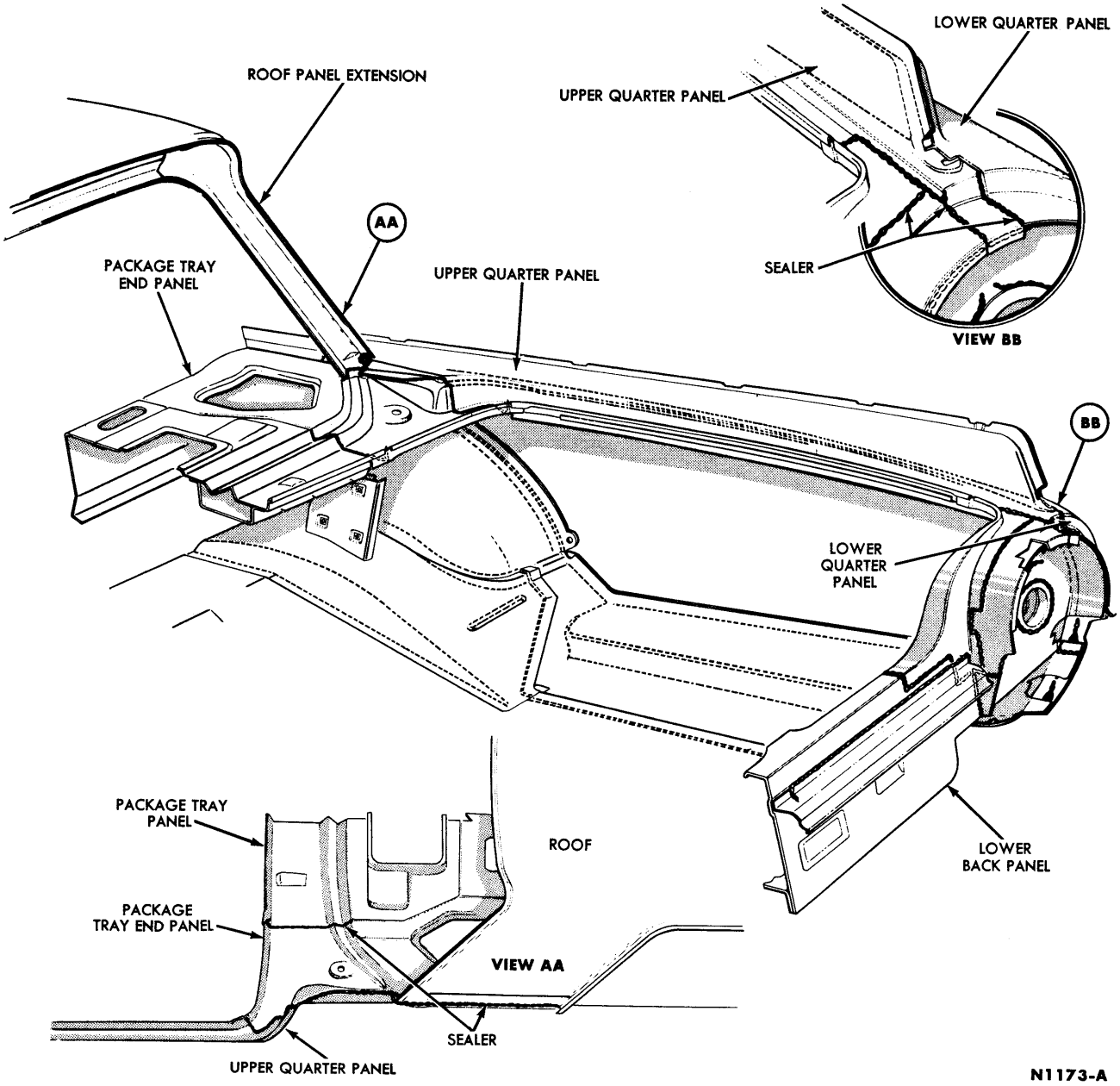

FIG. 11—Luggage Compartment and Back Panel Sealer Application

PART 11-2 FRONT SHEET METAL AND BODY TRIM

Section		Page
1	Front Sheet Metal	11-15
2	Door and Quarter Trim Panels	11-18
3	Headlining	11-19
4	Instrument Panel and Console Panel	11-21
5	Seat Mechanism and Construction	11-23
6	Exterior Mouldings	11-28

1 FRONT SHEET METAL

HOOD

The right and left hood locks are released by a Bowden wire control actuated from the passenger compartment. The hood is mounted on spring loaded hinges which allow for easy raising after the hood is released.

A safety catch, located on the front edge of the hood, permits the hood to pop open only a few inches when the locks are released (Fig. 1).

HOOD REPLACEMENT

1. Protect the body with covers to avoid scratches. Then obtain assistance to remove the hood. Remove the hood hinge to hood bolts (Fig. 2).

2. With the help of an assistant, position the hood on the hinges and install the hood hinge to hood bolts. Check the hood alignment and correct as necessary.

HOOD ALIGNMENT

Hood adjustment points are provided at the hinges, the locks, the locking dowel, and the rubber bumpers.

Fore-and-aft or side-to-side move-

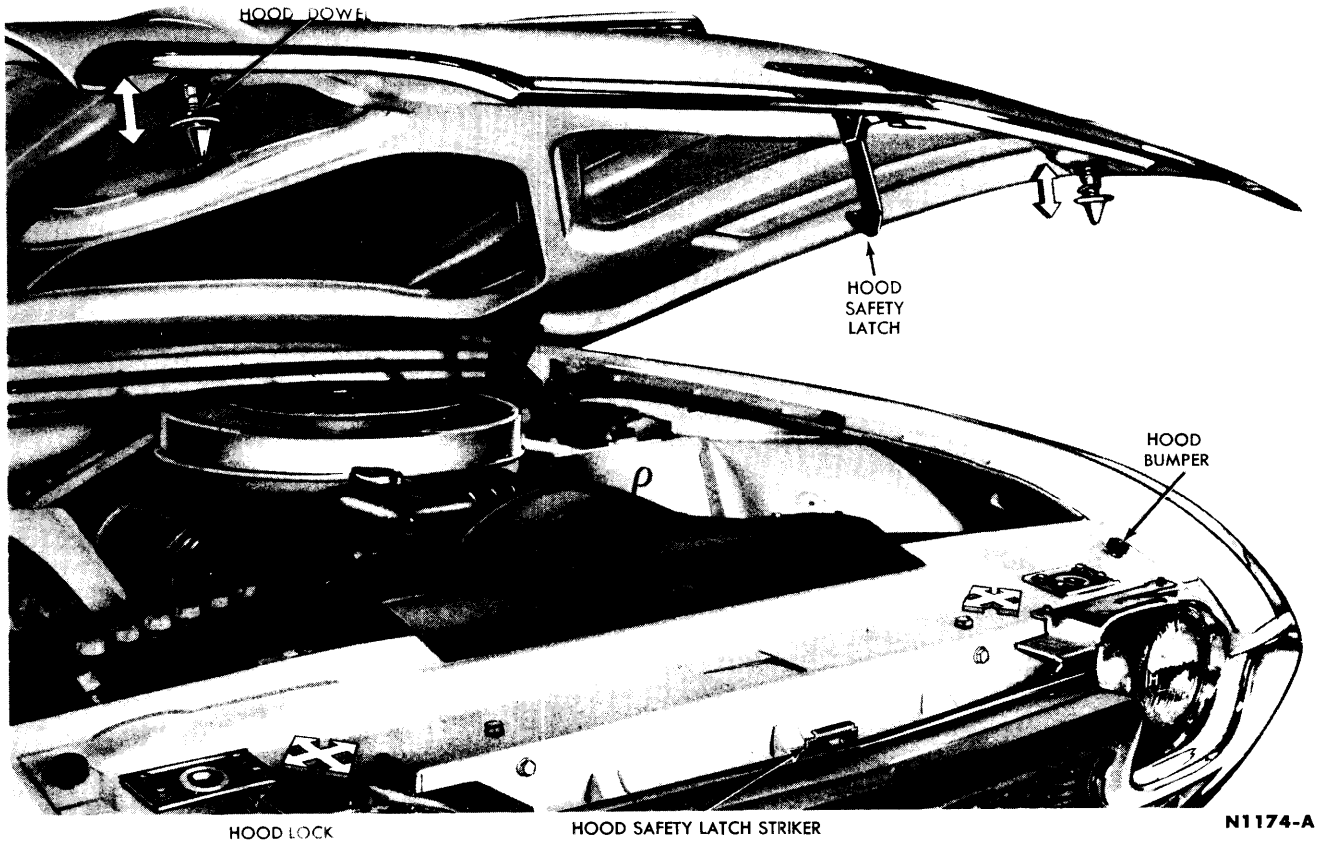

FIG. 1—Hood Locks

ment of the hood is accomplished at the hood hinge to hood bolts (Fig. 2).

Up-and-down adjustment is provided at the hinge to body bolts (Fig. 2).

Adjustable rubber bumpers provide leveling adjustments at each forward corner of the hood.

The hood lock can be moved side to side to provide easy lock operation. The hood locking dowels can be adjusted up or down after loosening the lock nut.

HOOD HINGE REPLACEMENT

1. Support the hood in the open position, and cover the fender and cowl panel.

2. Remove the hinge to hood retaining bolts, the hinge to body bolts (Fig. 2), and remove the hinge.

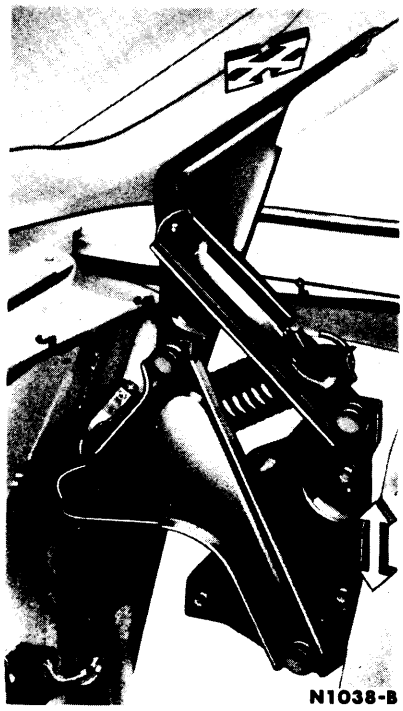

FIG. 2—Hood Hinges

3. Position the hood hinge on the body and loosely install the hinge retaining bolts.

4. Remove the hood support, align the hood, and tighten the hood hinge retaining bolts.

HOOD LOCK REPLACEMENT

1. Remove the hood lock retaining bolts from the lock being serviced.

2. Loosen the other hood lock retaining bolts.

3. Slide the lock being serviced from the end of the lock control rod, and then remove the lock.

4. Position the lock to the lock control rod and loosely install the retaining bolts.

5. Align the hood locks to the dowels (Fig. 1) and tighten all lock retaining bolts. Apply Lubriplate to the locks.

GRILLE AND BUMPERS

GRILLE AND FRONT BUMPER

The following procedure includes the information necessary to replace any serviceable part(s) of the grille and/or front bumper.

1. Raise the front of the car and install safety stands.

2. Disconnect the right and left hand parking light wires and pull free from their grommets in the splash shield.

3. Remove the bolts retaining the bumper inner arms and end braces to the underbody rail (Fig. 3) and, with a helper, remove the bumper assembly.

4. Remove the bumper guard, bumper end brace, bumper outer and inner arms, radiator grille splash shields, grille, and the grille-to-bumper finish panel.

5. Remove the parking lights.

6. Install the parking lights, grille-to-bumper finish panel, grille, radiator grille splash shields, bumper outer and inner arms, bumper guard, and the bumper end braces.

7. Position the front bumper and grille assembly on the car and install the retaining bolts.

8. Route the parking light wires through the grommets and connect the bullet connectors.

9. Remove the safety stands, and lower the car.

REAR BUMPER

To remove the rear bumper assembly proceed as follows:

1. Remove the muffler rear support strap bolts from the bumper outer support arms.

2. Disconnect the license plate light wires.

3. Remove the bolts retaining the outer and center arm brackets to the underbody (Fig. 4), and remove the bumper assembly.

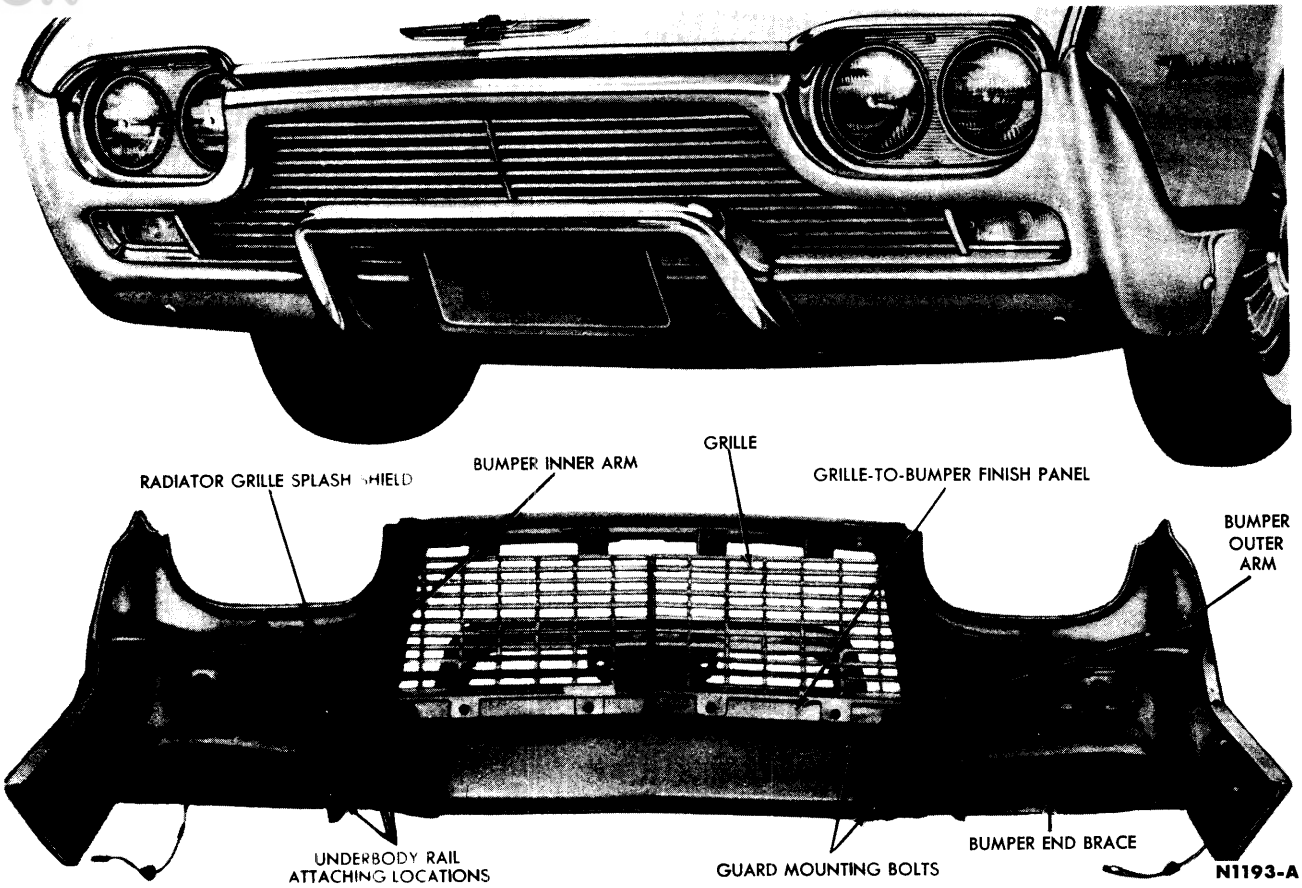

FIG. 3—Grille and Front Bumper

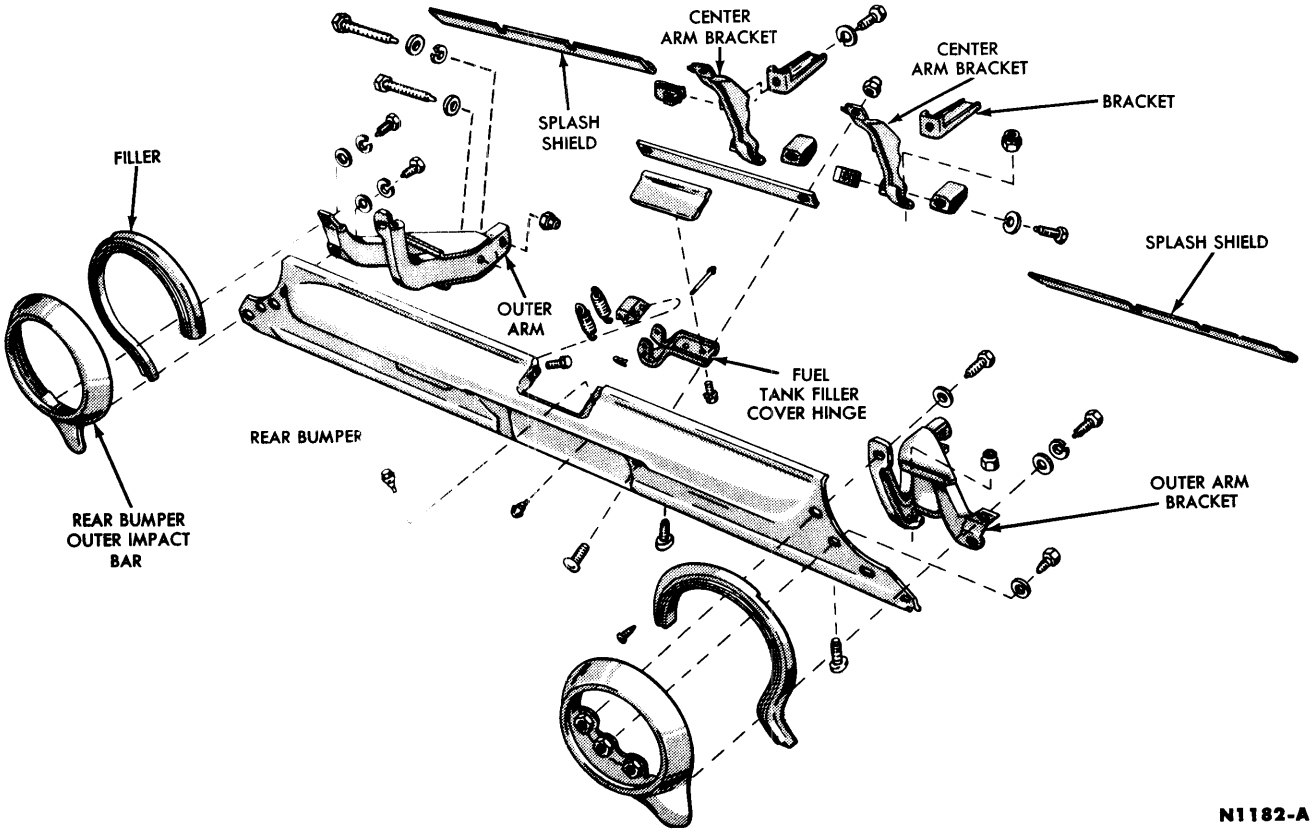

FIG. 4—Rear Bumper

2 DOOR AND QUARTER TRIM PANELS

DOOR TRIM PANEL REPLACEMENT

1. Remove the control handles (Fig. 5). Remove the arm rest retaining screws, and remove the arm rest (Fig. 6).

2. Remove the lock push button (Fig. 6). Remove the door belt corner cap (Fig. 6). Remove the screws that retain the trim panel front and rear retainer strips to the door inner panel, and remove the trim panel. If the door has electric windows, disconnect the door switch wires at the switch.

3. Transfer the trim panel mouldings, weatherstrip, front and rear retaining strips, and the power window switch to the new trim panel.

4. Insert the interior handle retaining clip in the handle, place the plate against the trim panel with the collar facing the handle, and push the handle until the clip snaps into the groove.

5. Install the lock push button, the panel retaining screws, the corner cap, and the arm rest.

Tool—S9538-A

FIG. 5—Inside Door Handle Removal

QUARTER TRIM PANEL REPLACEMENT

1. Lift the rear seat cushion front edge from its retainers, remove the cushion, and then remove the rear seat back from the car.

2. On a car with a manual window regulator, remove the quarter window regulator handle (tool S9538-A) and escutcheon (Fig. 7).

3. Remove the arm rest retaining screws and remove the arm rest (Fig. 8).

4. Remove the quarter trim panel retaining screws (Fig. 8), and remove the panel from the upper retainers. On a car with a power window regu-

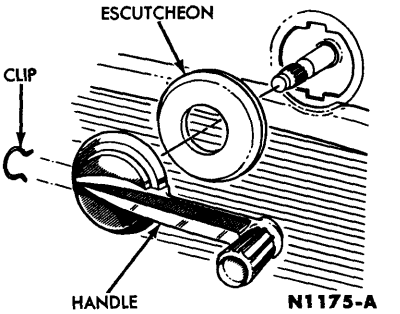

FIG. 7—Window Handle

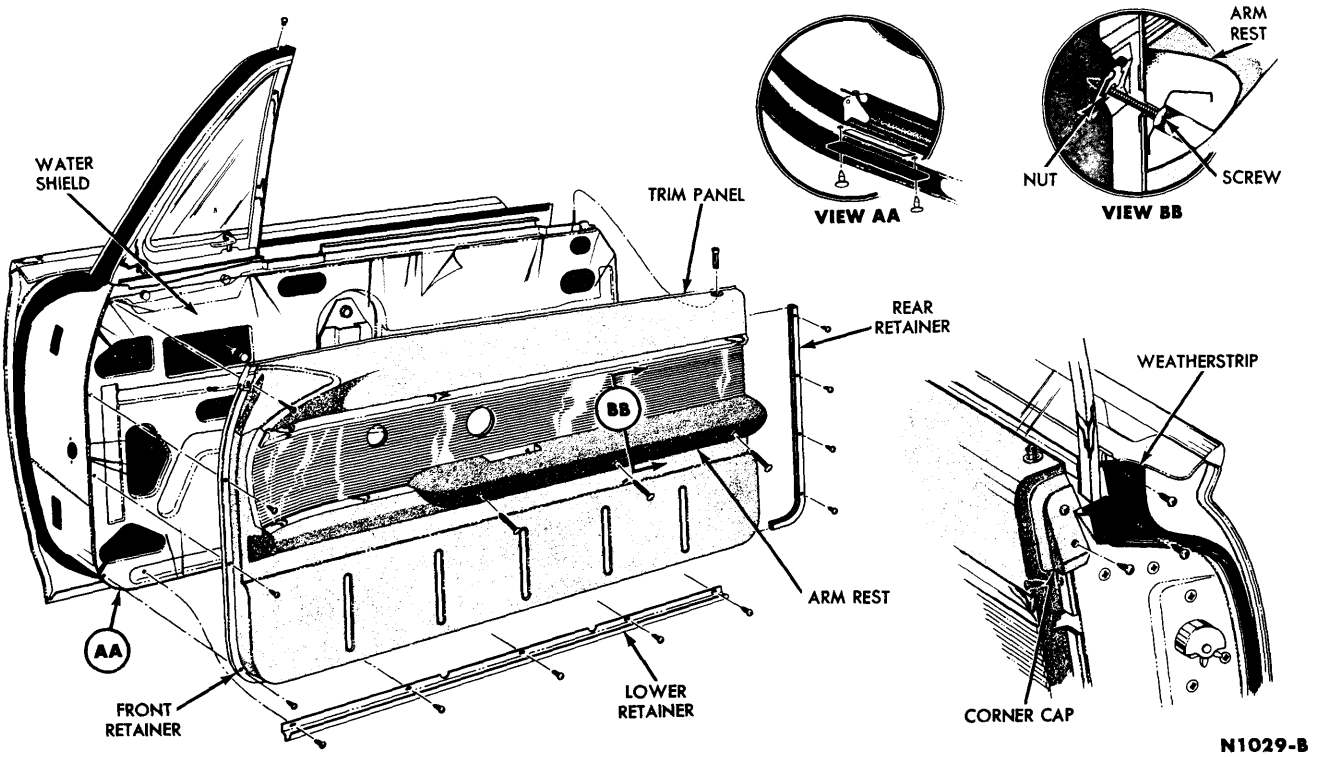

FIG. 6—Door Trim Panel

lator, disconnect the switch wires at the switch.

5. Connect the power window switch wires to the switch. Install the trim panel, and arm rest.

6. Insert the manual window regulator handle retaining clip in the handle, place the escutcheon assembly against the trim panel, and push the handle onto the shaft until the retaining clip snaps into the groove.

The quarter window regulator handle should be horizontal and pointing rearward with the window in the raised position.

7. Install the rear seat back and the rear seat cushion.

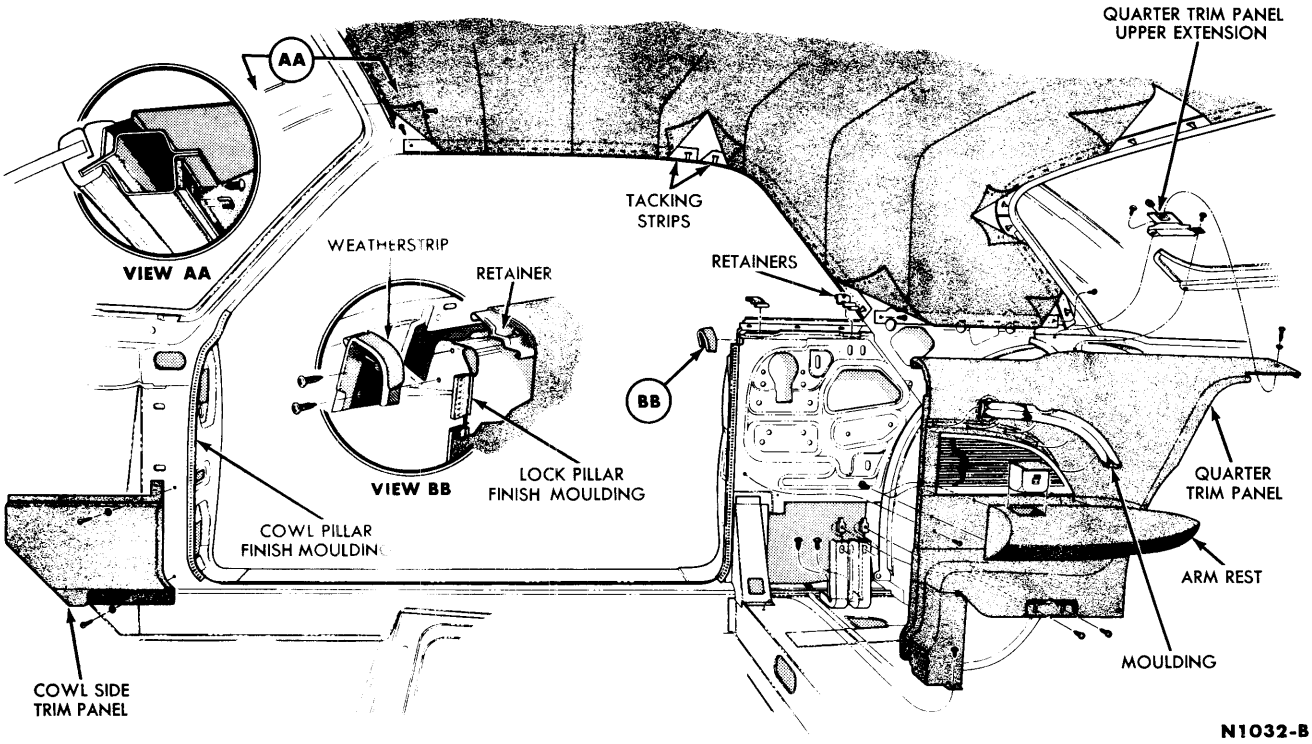

FIG. 8—Body Side Interior Trim

3 HEADLINING

REPLACEMENT

1. Remove the sun visor assemblies, and the windshield side and upper garnish mouldings (Fig. 9). Pull the staples out of the windshield header tacking strip and loosen the headlining (Fig. 8).

2. Remove the rear seat cushion and back. Remove the back window garnish mouldings. Then pull the staples out of the rear window tacking strip and loosen the headlining.

3. Remove the quarter window garnish mouldings. Remove the coat hooks, roof interior side mouldings, and the roof interior side ornament. Then remove the dome light assembly and disconnect the light wires. Tape the dome light wires to prevent a short circuit.

4. Pull the staples out of the roof side tacking strip and loosen the headlining.

5. Starting at the front of the car, push the ends of the roof bows out of the side rails. At the rear bow, release the two rear bow retainers from the roof rear rail.

6. If a new headlining is to be installed, lay both the old and new headlinings on a clean work table and transfer the roof bows in sequence to the new headliner listings.

Roof bows are color coded at each end. When ordering new roof bows, be sure to note the color at each end of the bow.

7. Install the rear bow in the side rails, and hook the two rear bow retainers to the bow and the roof rear rail.

8. Install the other roof bows, working from the rear toward the front of the car.

9. The headlining should be centered and the seams straight. Pull the headlining forward tight enough to

remove all wrinkles, and staple the headlining to the windshield header tacking strip, starting at the center and working toward the sides. Cut off the excess material.

10. Staple the headlining around the rear window, starting at the center and working toward the sides. Pull the headlining just tight enough to remove the wrinkles. Cut off the excess material around the rear window.

11. Staple the headlining to the roof side tacking strip. Pull the headlining just tight enough to remove wrinkles. Cut off the excess headlining.

12. Install the roof interior side ornament and mouldings, coat hooks, and quarter window garnish mouldings.

13. Install the windshield side and upper garnish mouldings, and the sun visor assemblies.

If the headlining is slightly wrinkled spray steam through the dome light opening. As the headlining dries, it will shrink slightly, removing most wrinkles and sags.

14. Connect the wires to the dome light and install the assembly. Install the rear seat back and the seat cushion.

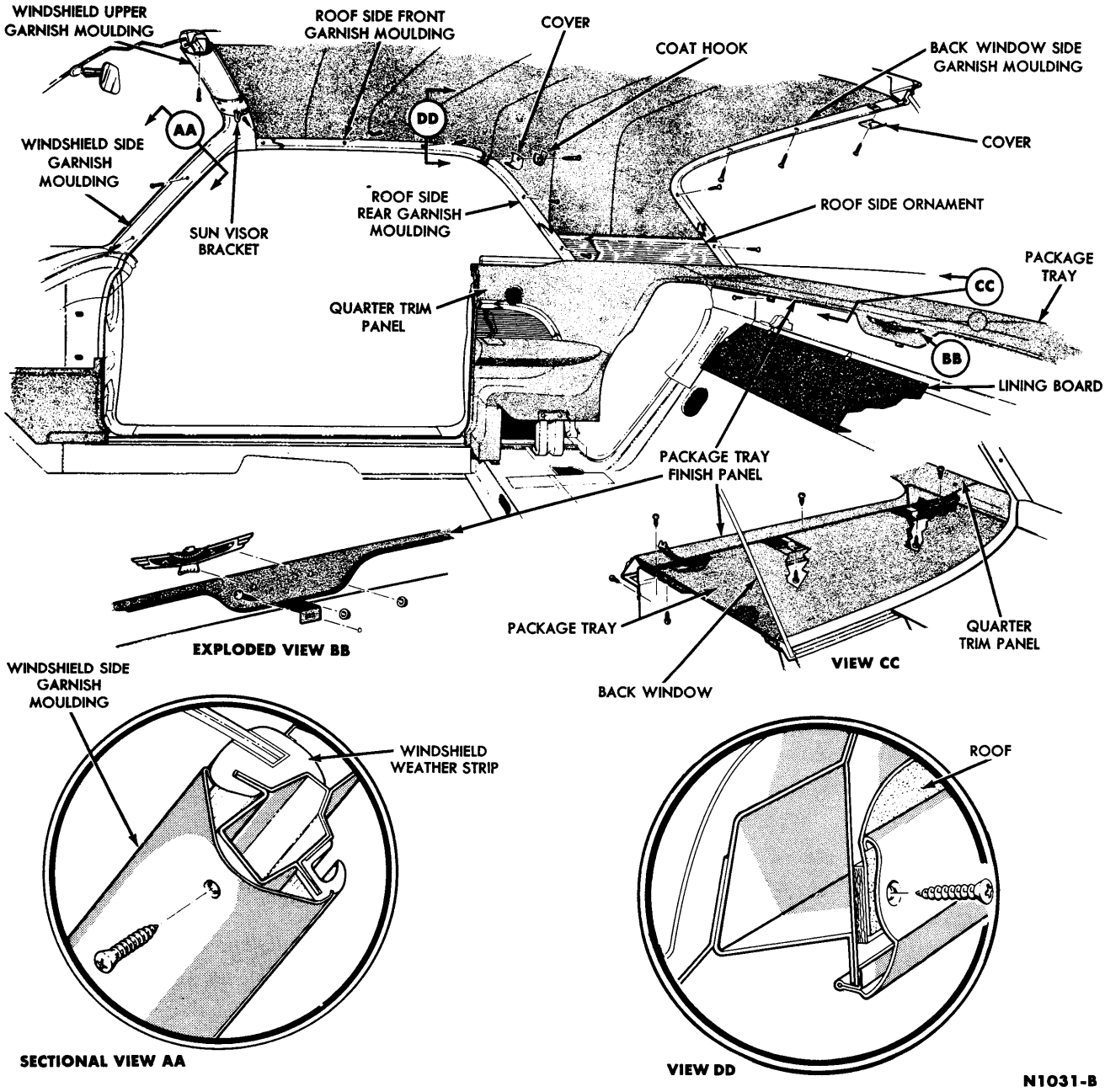

FIG. 9—Body Interior Mouldings

4 INSTRUMENT PANEL AND CONSOLE PANEL

The instrument panel and extension panels are mounted and adjusted at the locations shown in Fig. 10.

The console trim panels, glove compartment, and instrument panel extension trim panels are shown in Fig. 11.

INSTRUMENT PANEL SAFETY COVER REPLACEMENT

This procedure includes the removal of the instrument panel assembly.

1. Disconnect the battery.

2. Remove the sun visors, windshield side garnish mouldings, and

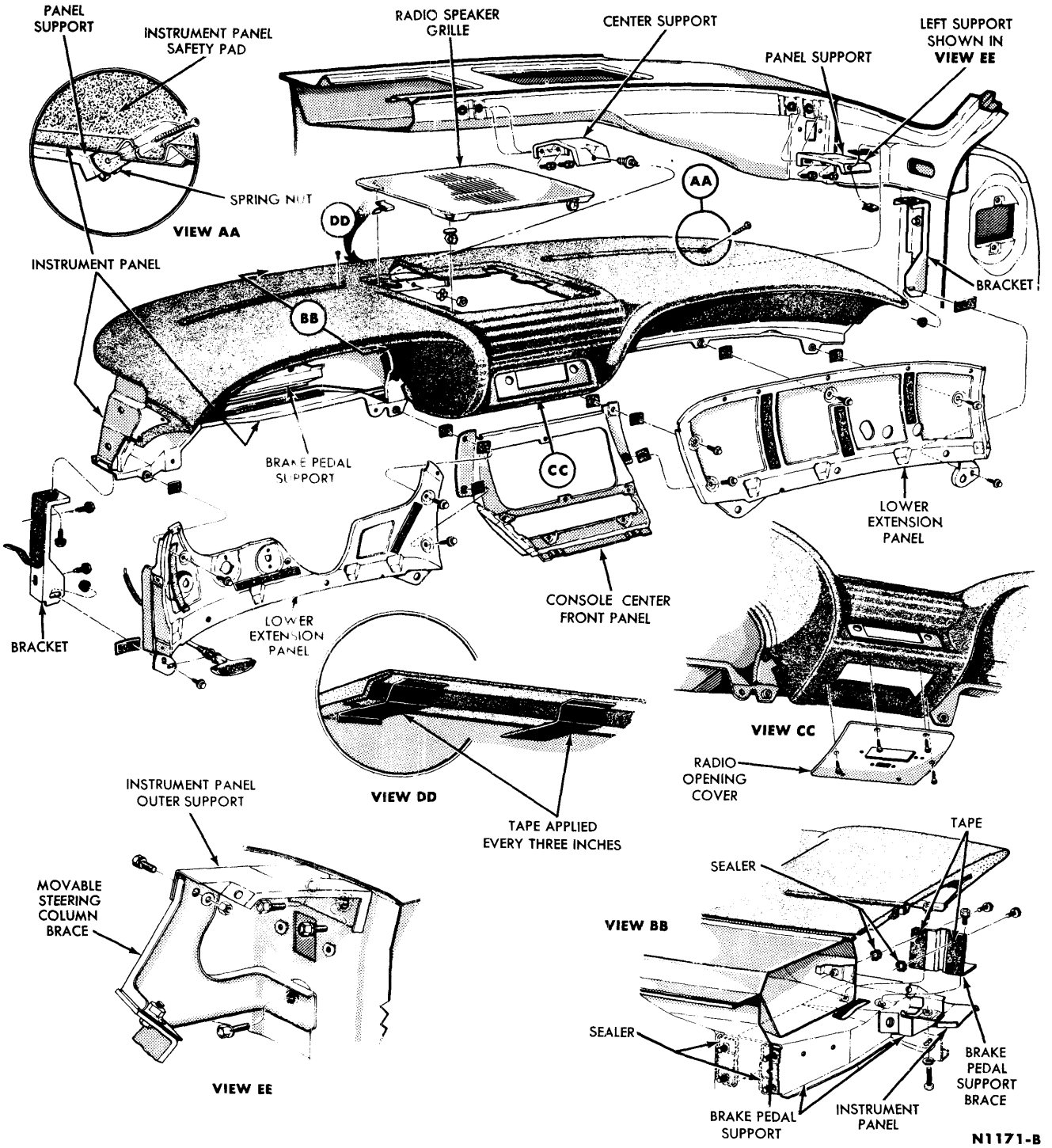

FIG. 10—Instrument Panel and Extension Panels

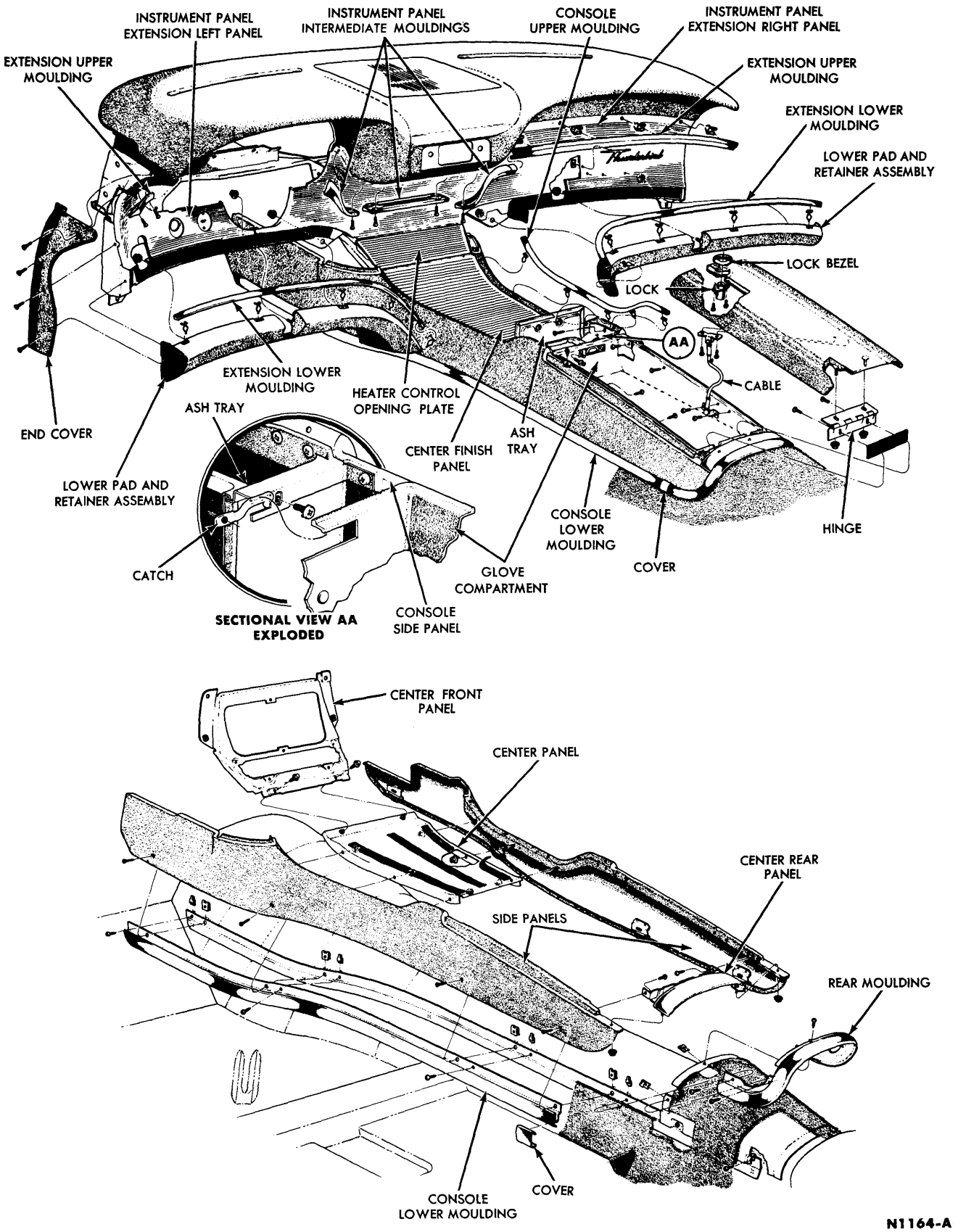

FIG. 11—Console Finish Panel and Mouldings

the instrument panel end cover plates.

3. Remove the radio opening cover and map light as an assembly.

4. Snap out the radio speaker grille and remove the speaker (Fig. 10).

5. Remove the radio knobs, bezels, and retaining nuts.

6. Remove the bolt retaining the radio to the instrument panel, disconnect the radio lead wire and antenna lead, and remove the radio through the radio speaker opening.

7. Remove the instrument panel extension upper and lower mouldings (Fig. 11).

8. Remove the left lower pad and retainer assembly, and then remove the lower extension.

9. Remove the right lower extension with the lower pad and retainer assembly attached.

10. Remove the screws in each defroster outlet (Fig. 10).

11. Remove the headlight switch from the instrument panel and place the switch out of the way. Disconnect the wiring harness from the instrument panel cluster upper studs and remove the cluster.

12. Disconnect the circuit breaker from the left side of the instrument panel.

13. Disconnect the wiper motor control cable at the motor, the defroster hoses at the nozzles, the heater wire harness, heater resistor wires, and the wiper motor wire.

14. Disconnect the wire from the right pillar light switch and remove the wire from the pillar.

15. Disconnect the instrument panel from the center support, panel side supports, and brackets (Fig. 10).

16. Disconnect the steering column assembly from the support bracket.

17. With the aid of a helper, remove the instrument panel.

18. Remove the safety pad from the instrument panel and clean the instrument panel.

19. Apply M-2G17-A cement to the instrument panel and install the safety pad.

20. To install the instrument panel, reverse the removal procedure.

5 SEAT MECHANISM AND CONSTRUCTION

POWER SEAT MECHANISM

The power seat mechanism consists of a reversible electric motor, control switch, motor control relay, gear housing and screw shaft, and 2 solenoid actuated nuts.

The gear housing and screw shaft consists of a driving worm gear and a driven gear which rotates the screw shaft. The driving worm gear is connected to the motor by a rubber coupling.

The horizontal and vertical nut and solenoid assemblies are meshed to the screw shaft and connected to the seat track assembly.

The horizontal and vertical nut and solenoid assemblies are identical in construction. Each assembly consists of an internally threaded nut coupled with a locking solenoid. When the solenoid is energized, the internally threaded nut is locked by the solenoid pawl (ball) engaging a notch on the nut. As the screw shaft is rotated through the locked nut, the nut and solenoid move along the shaft and move the seat track.

TROUBLE DIAGNOSIS

Fig. 12 shows the power seat electrical circuit.

Seat Will Not Operate. If both front seats are power operated and one seat is inoperative, the source of trouble is between the junction block and the inoperative seat mechanism.

1. Disconnect the red-blue stripe and the black wires, under the seat, which lead to the junction block under the console panel.

With a self-powered test light check the black wire to see if the system is properly grounded. If the black wire is not grounded, remove the console panel (Fig. 11) and check the connections at the junction block, and repair as necessary.

2. Check the red-blue stripe wire for voltage. If voltage is not available, use a voltmeter to check both terminals of the 30-ampere circuit breaker located on the starter relay. If voltage is available on both sides of the circuit breaker, remove the console panel and check the terminal of the junction block for voltage. If voltage is available at this point, repair or replace the wire between the junction block and the seat assembly. If voltage is not available at the junction block, repair or replace the wire from the 30-ampere circuit breaker to the junction block.

If voltage is available at only one terminal of the 30-ampere circuit breaker, replace the circuit breaker.

3. If voltage is available at the red-blue stripe wire, under the seat assembly, check the connections from the red-blue stripe wire to the seat relay for broken or loose wires (Fig. 13). Repair or replace the wires as necessary. If the wires are all right, check the black wire at the motor for proper connection.

4. Separate the seat control switch wire connectors enough to insert a voltmeter test lead and still leave the

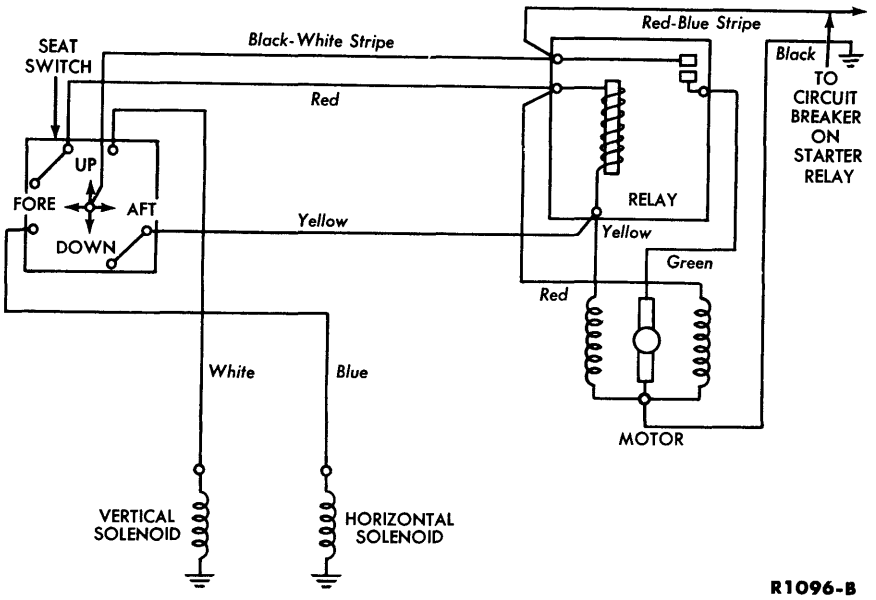

FIG. 12—Power Seat Wiring

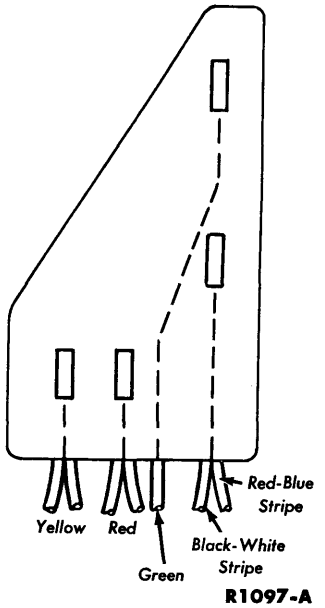

FIG. 13—Relay Wire Connector

wire connector functional. Check for battery voltage at the black-white stripe wire. If voltage is not available, repair or replace the black-white stripe wire (Fig. 12).

Connect a voltmeter from each of the switch terminals to ground and operate the switch. If voltage is not available at any one of the switch terminals when the switch is operated, replace the seat control switch.

5. Separate the motor green wire at the connector. Operate the seat control switch and test the relay green wire for voltage. Repair or replace the relay, wires, or motor (Fig. 13).

Motor Runs But Seat Does Not Move. Check for the following:

1. Loose or broken motor coupling.

2. Defective seat regulator worm, gear, or screw shaft.

3. Broken or loose wires from control switch to solenoid (Fig. 12).

4. Defective solenoid and nut assembly.

Seat Moves In One Plane Only. Check for the following:

1. Connect a voltmeter from each of the switch terminals to ground (Fig. 12) and operate the switch. If voltage is not available at any one of the switch terminals when the switch is operated, replace the switch.

2. Check the inoperative circuit solenoid and limit switches for proper operation.

POWER SEAT MECHANISM REMOVAL

1. From under the car, remove the seat track retaining nuts and washers from the 4 studs. Disconnect the wires under the seat which lead to the junction block and remove the seat assembly.

2. Place the seat assembly on a clean work area and remove the 4 bolts retaining the seat track to the seat assembly. Disconnect the wires at the seat control switch and remove the seat track mechanism.

POWER SEAT MECHANISM INSTALLATION

1. Connect the control switch wires and place the seat track mechanism in position on the seat assembly. Install the retaining bolts.

2. Place the seat assembly in the car and install the washers and nuts on the studs which retain the seat track to the floor panel. Connect the seat wires to the junction block wiring harness. Test the seat assembly for proper operation.

MOTOR REPLACEMENT

1. Remove the 2 nuts and washers retaining the motor to the drive assembly and remove the motor. Remove the rubber coupling from the motor shaft. Transpose the new motor leads for the defective motor leads (Fig. 12).

2. Install the rubber coupling on the motor. Place the motor on the drive assembly, making sure the rubber coupling is properly installed on the drive gear shaft, and install the motor retaining nuts with washers.

MANUAL SEAT TRACK

The manually operated front seat is mounted in the conventional manner on 2 seat tracks. The seat release is located at the lower front center of the seat, and is operated by pulling the lever up to release the seat track.

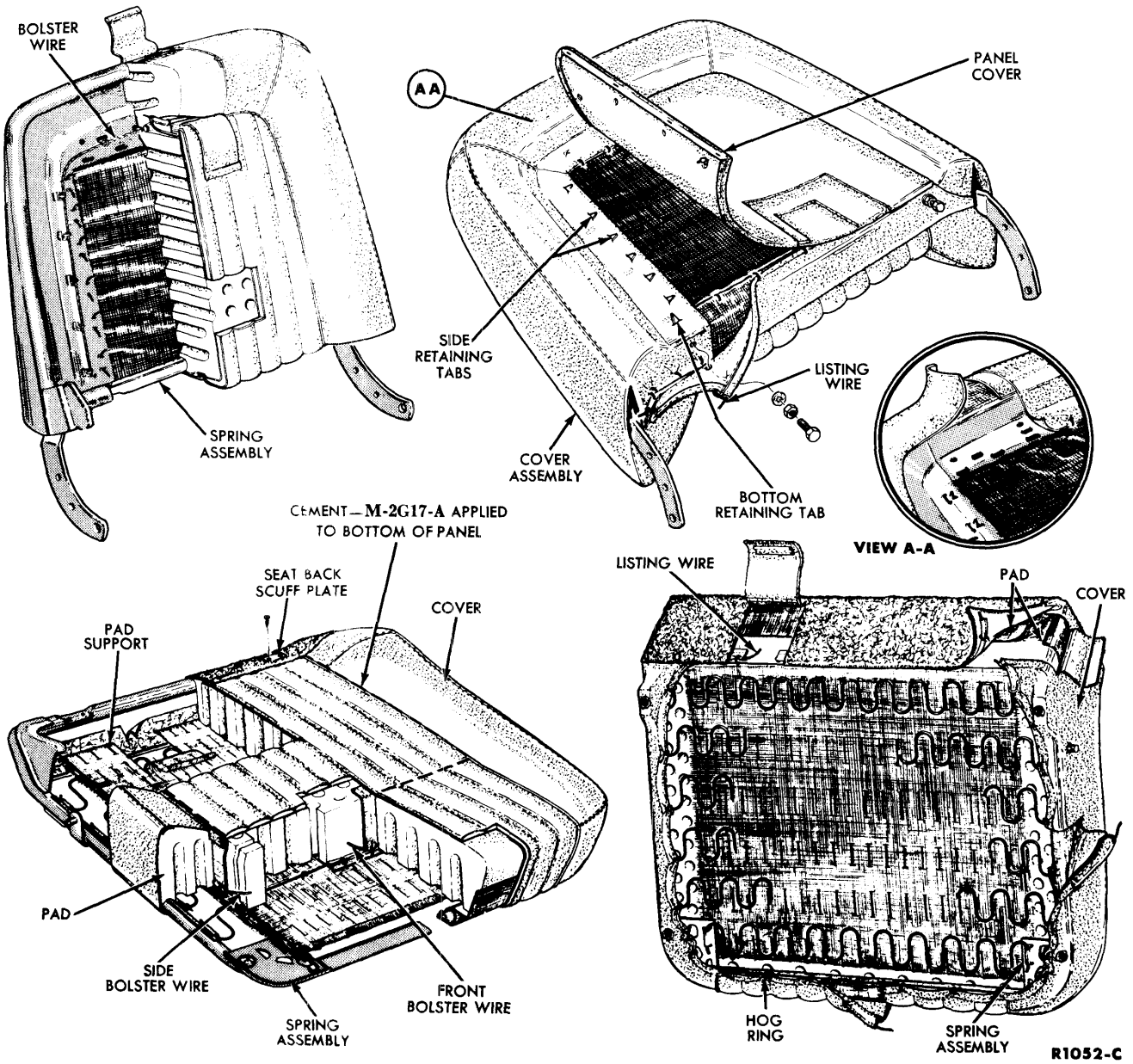

FIG. 14—Front Seat Back and Cushion

TRACK REPLACEMENT

1. Working under the car, remove the seat track retaining stud nuts and washers. Then remove the seat assembly from the car and place it in a clean work area.

2. Remove the screws which retain the seat track assembly to the seat cushion, and remove the track assembly.

3. Disconnect the seat track brace and latch release rod from the track being replaced, and connect these parts to the new track.

4. Loosely install the track-to-floor retaining studs in the seat track assembly.

5. Install the track assembly on the seat cushion, and tighten the screws.

6. Position the seat in the car and, working under the car, install the washers and nuts on the retaining studs.

SEAT COVER REPLACEMENT

Repairs to seat cushions or seat backs are performed out of the car and are usually limited to replacement of torn or burned seat covers. In a few instances, the pads may be damaged and require replacement.

When installing a new seat cover or pad, refer to Figs. 14 and 15 for the location of listing wires, hog rings, anti-squeak pads, and seat pad stack-up.

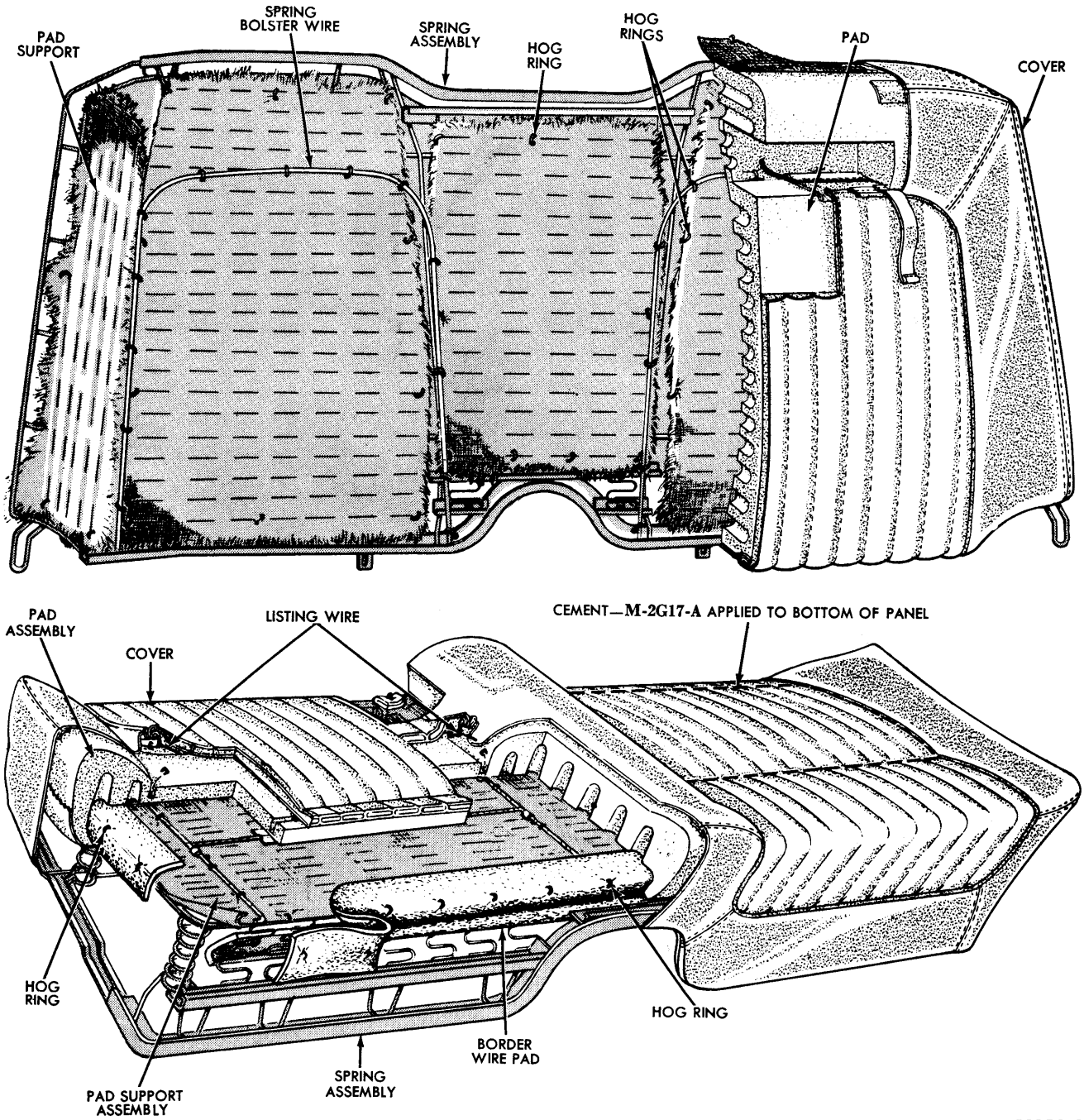

FIG. 15—Rear Seat Back and Cushion

FRONT SEAT REMOVAL

From underneath the car, remove the seat track retaining stud nuts and washers. Remove the seat assembly from the car and place it on a clean work area.

FRONT SEAT CUSHION COVER REPLACEMENT

1. Remove the seat assembly, and then remove the cushion side shields and seat track assembly. From each side of the seat, remove the seat back retaining pin and retainer, and then remove the seat back.

2. Remove the seat back scuff plates and remove the hog rings retaining the seat cushion cover to the spring assembly (Fig. 14). Separate the bottom facing from the cushion cover top rear panel, and allow the facing to remain cemented to the foam rubber pad. Remove the cushion cover.

3. Inspect the pad and spring assemblies, and repair or replace as necessary.

4. Transfer the listing wires to the new cover.

5. Place the new cover assembly over the pad and seat spring assembly and secure it to the front bolster wire with 5 hog rings. Apply M-2G17 A cement to the bottom of the cushion cover top rear panel and to the old facing which was left cemented to the foam rubber pad.

6. Secure each side bolster wire to the seat spring assembly with 6 hog rings.

7. The front and side edges of the cover assembly can now be secured to the bottom of the spring assembly with hog rings as shown in Fig. 14.

8. Secure the rear edge of the cover assembly to the bottom of the spring assembly with 6 hog rings.

9. Install the 2 scuff plates on the cushion.

10. Install the cushion side shields, seat back, and seat tracks. Install the seat assembly.

FRONT SEAT BACK COVER REPLACEMENT

1. From each side of the seat, remove the seat back pivot arm retaining pin and retainer, and then remove the seat back. Remove the 2 seat back stops, seat back pivot arm covers, and remove the panel cover from the seat back (Fig. 14). Remove the hog rings from the seat back assembly, bend the tabs up on the seat back, and remove the seat back cover. Inspect the pad and spring assemblies, and repair or replace as necessary.

2. Transfer the listing wires to the new cover.

3. Place the new cover over the pad and spring assembly, and with 12 equally spaced hog rings, secure the cover to the bolster wire (Fig. 14).

4. Pierce the cover over the side and bottom retaining tabs, and bend the side retaining tabs toward the center of the seat.

5. Pull the lower rear edge of the cover over the bottom of the spring assembly, and secure each side with 3 hog rings (Fig. 14).

6. Pull the lower front edge of the cover over the bottom of the spring assembly, and secure to the lower rear edge of the cover with 1 hog ring on each side (Fig. 14). Secure the lower listing of the cover assembly to the spring assembly with 5 hog rings, pierce the cover over the bottom retaining tab, and bend each tab toward the top of the seat.

7. Secure the top rear edge of the cover assembly to the spring assembly with 5 hog rings.

8. Install the seat back panel with the retaining clips, the seat back pivot arm covers, and the 2 seat stops to the seat back assembly.

9. Connect the seat back to the seat cushion and install the pivot arm retainers and retaining pins.

FRONT SEAT INSTALLATION

Adjust the seat stops as required. Place the seat assembly in the car and install the nuts and washers on the studs that retain the seat tracks to the floor panel.

REAR SEAT CUSHION COVER REPLACEMENT

1. Raise the front of the rear seat cushion and lift the cushion assembly from the car. Place the cushion on a clean work area. Remove the hog rings retaining the cover to the spring assembly (Fig. 15). Separate the bottom facing from the cushion cover top rear panel, and allow the facing to remain cemented to the foam rubber pad. Remove the cushion cover.

2. Inspect the pad and spring assemblies, and repair or replace as necessary.

3. Transfer the listing wires to the new cover.

4. Place the new cover assembly over the spring and pad assemblies. Attach the cover at each center bolster wire with 5 hog rings. Attach the outer edges of the cushion cover insert to each of the bolster wires with 6 hog rings.

5. Apply M-2G17-A cement to the bottom of the cushion cover top rear panel and to the old facing which was left cemented to the foam rubber pad (Fig. 15).

6. Carefully turn the cushion upside down and with 60 equally spaced hog rings attach the cover to the bottom of the spring assembly. Install the seat cushion in the car.

REAR SEAT BACK COVER REPLACEMENT

1. Remove the rear seat cushion. Remove the 2 screws retaining the bottom edge of the seat back to the body and 1 screw retaining each side. Lift the seat back slightly and remove the assembly from the car. Place the seat back assembly on a clean work area.

2. Remove the hog rings retaining the cover to the spring assembly (Fig. 15) and remove the cover. Inspect the pad and spring assemblies, and repair or replace as necessary.

3. Transfer the listing wire to the new cover.

4. Place the cover over the pad and spring assemblies. Secure the cover to each of the bolster wires with 17 hog rings. Turn the seat upside down and attach the cover along the top, sides, and bottom of the spring assembly with 63 equally spaced hog rings.

5. Install the seat back assembly and the rear seat cushion.

6 EXTERIOR MOULDINGS

The exterior mouldings and various moulding retaining clips and bolts are shown in Fig. 16. To remove the mouldings secured with bolts or nuts, it may be necessary to remove some of the interior trim panels.

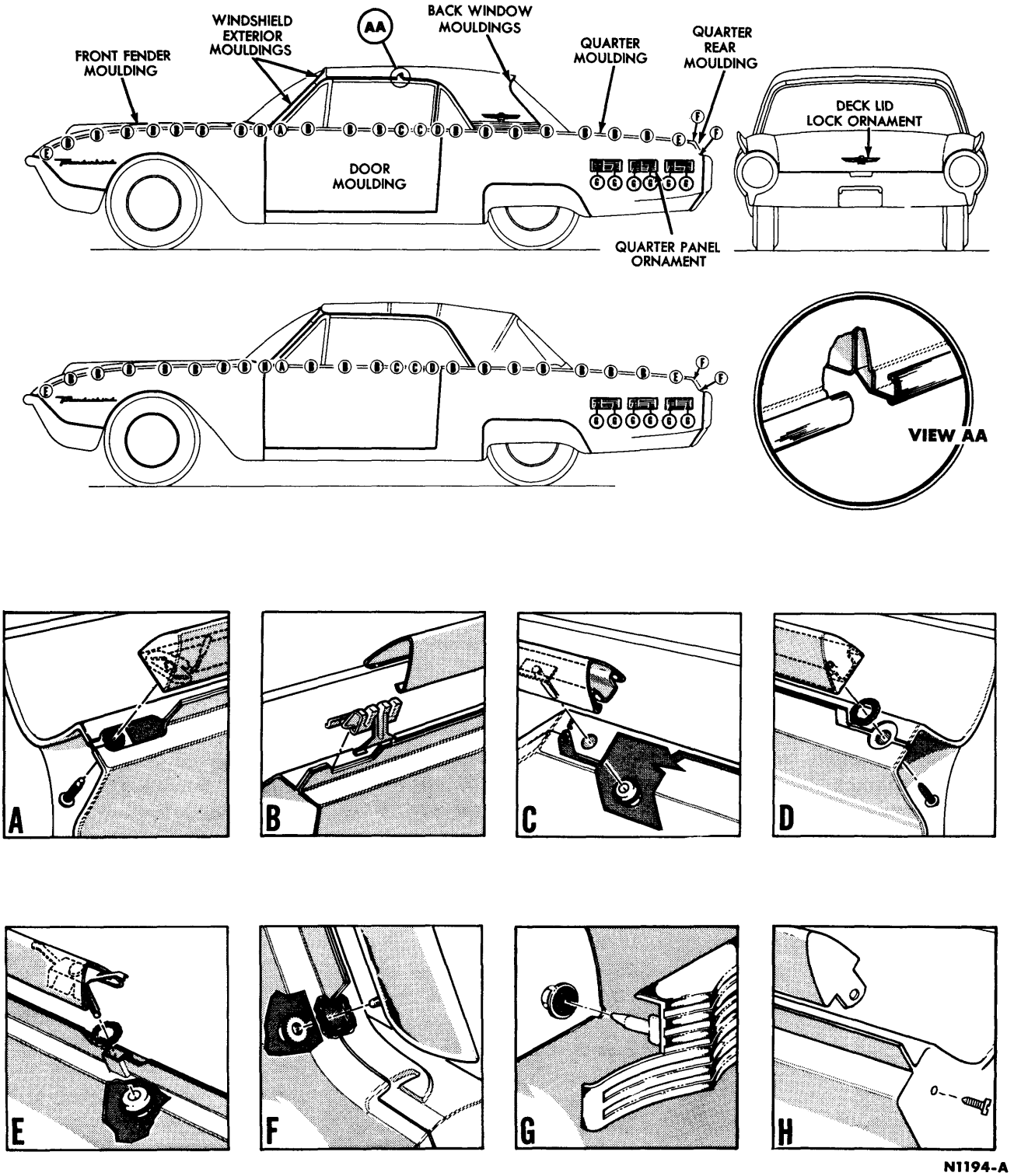

FIG. 16—Body Exterior Mouldings

PART 11-3 DOORS, WINDOWS, AND DECK LID

Section		Page
1	Door Replacement and Alignment	11-29
2	Power Windows	11-31
3	Vent and Door Windows	11-32
4	Quarter Window	11-34
5	Windshield and Back Window	11-35
6	Deck Lid—Hardtop Model	11-37

1 DOOR REPLACEMENT AND ALIGNMENT

Replacement doors are furnished as a sheet metal shell in prime paint. They have no hinges, trim, glass or hardware. When a door is replaced, transfer all usable parts from the old door to the new one, and replace any parts which are damaged beyond repair.

DOOR REPLACEMENT

Repair any dings or dents in the new door which may have occurred in handling and storage. Sand, paint, and install the weatherstrip on the new door before assembly

1. Remove all usable hardware the trim panel and the plastic water shield. Remove the window and lock components, and all usable outside mouldings and clips.

2. Slide the door off the hinges If a hinge is damaged, remove the 4 hinge pillar bolts, and replace the hinge (Fig. 1).

3. Position the door on the hinges, tighten the bolts finger-tight, align the door, and tighten the bolts securely.

4. Install the window and lock mechanisms, glass and vent window assemblies. It may be necessary, at this time, to perform a final door alignment to obtain a satisfactory weather seal at the windshield pillar and/or the roof rail.

5. Install the exterior trim, the plastic water shield, and the interior trim panel.

DOOR ALIGNMENT

The door hinges provide sufficient adjustment latitude to correct most misalignment conditions. The elongated holes where the hinges attach to the pillars provide in-and-out movement of the front door to obtain flush fits with the front fenders (Fig. 1).

The bolt holes where the doors attach to the hinges are enlarged. This permits a circular movement of the front door to obtain proper spacing all around the door (Fig. 1).

ALIGNMENT PROCEDURE

1. Consult Fig. 1 to determine which hinge bolts must be loosened to move the door in the desired direction.

2. Loosen the hinge bolts enough to permit movement of the door with a padded pry bar.

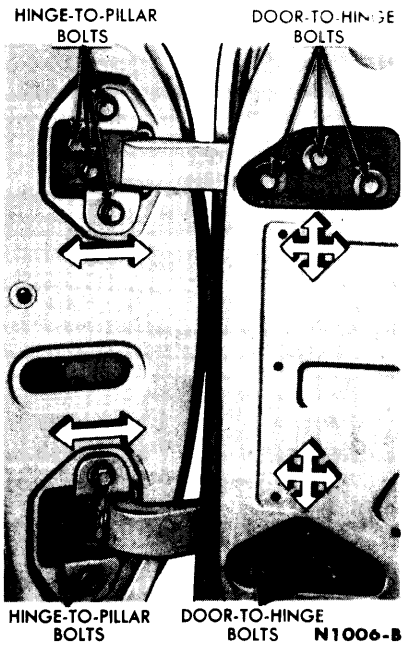

FIG. 1—Door Hinges

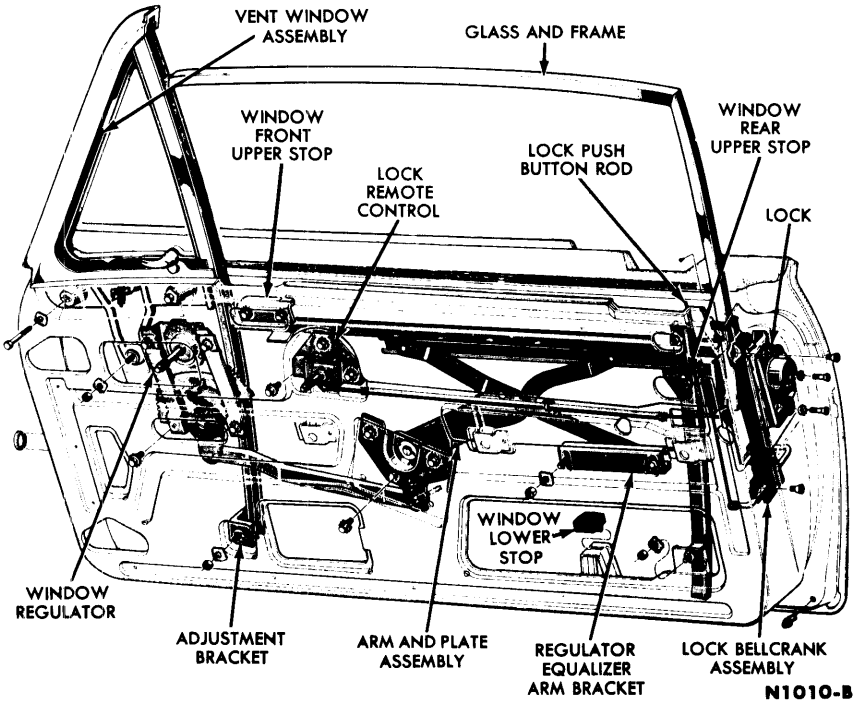

FIG. 2—Door Lock and Window Mechanism

3. Move the door the distance estimated to be necessary. Tighten the hinge bolts and check the door fit.

4. Repeat the operation until the desired fit is obtained, and check the striker plate alignment for proper door closing.

DOOR LOCKS

The door locking mechanism (Fig. 2) consists of the door lock and rotor, lock cylinder, inside and outside handles, striker plate, and the linkage connecting these parts. Improperly aligned doors cause the major portion of lock failures by putting excessive strain on the striker plate and rotor. **Do not attempt to correct door misalignment with a striker plate adjustment.**

LUBRICATION

The accessible parts of the locking mechanism should be lubricated periodically as shown in Part 12-2.

The parts of the lock mechanism on the inside of the door are lubricated at assembly and require no further attention. However, if it is necessary to repair or replace some part of the lock mechanism, apply silicone lubricant to all new moving parts and to the related parts within the door. While the trim panel is off, the window regulator mechanism should also be lubricated with Lubriplate.

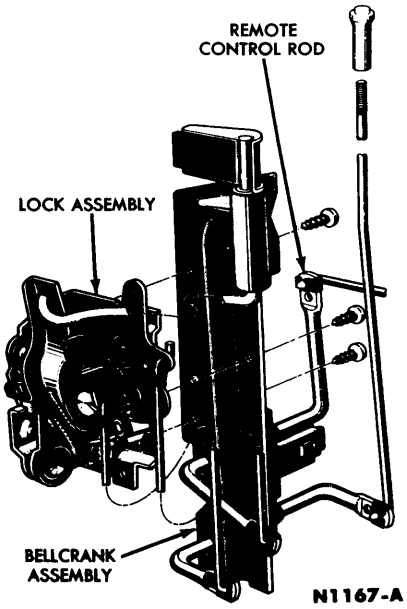

FIG. 3—Door Lock and Bellcrank

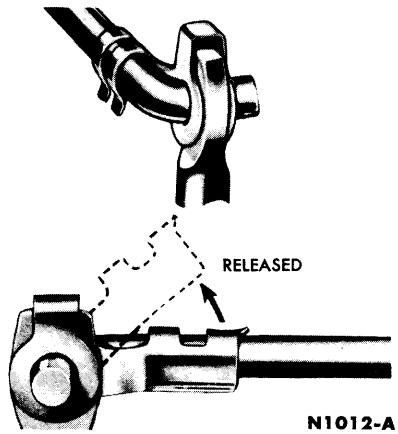

FIG. 4—Remote Control Rod Clips

DOOR LOCK REPLACEMENT

1. Raise the door glass, and remove the door trim panel (see Part 11-2). Loosen the water shield enough to reveal the door panel access holes.

2. Disconnect the remote control link at the upper bellcrank (Fig. 3).

3. Remove the screws retaining the lock to the door panel (Fig. 2). Disconnect the door lock cylinder link at the lock and then remove the lock and bellcrank assembly, with the links attached, from the door.

4. Disconnect the links from the upper and lower bellcrank (Fig. 4). Remove the screws retaining the lock to the bellcrank and remove the lock.

5. Transfer the lock assembly links to the new lock assembly. Install the lock assembly to the bellcrank.

6. Connect the links to the upper and lower bellcranks.

7. Install the lock and bellcrank assembly to the door panel. Connect the lock cylinder link to the lock assembly. Connect the remote control link to the upper bellcrank.

8. Check the door lock mechanism for ease of operation and adjust as required.

9. Install the door water shield and trim panel (see Part 11-2).

LOCK CYLINDER

When a lock cylinder is replaced, both door lock cylinders and the ignition lock cylinder should be replaced in a set. This will avoid carrying an extra key which will fit only one lock.

The key code is stamped on the door and glove box lock cylinders.

Replacement

1. Remove the door trim panel and pull the water shield away from the door access holes (Part 11-2).

2. Disconnect the lock link at the cylinder, and remove the cylinder retainer and lock cylinder (Fig. 5).

3. Insert the cylinder in the door, install the cylinder retainer, and connect the lock link to the cylinder.

4. Install the door water shield and trim panel.

DOOR LOCK REMOTE CONTROL REPLACEMENT

1. Raise the window to the closed position, remove the door trim panel, and loosen the plastic water shield enough to reveal the lower access hole and the remote control rod access hole (Fig. 2).

2. Reach through the remote control rod access hole and disconnect the remote control rod at the bellcrank (Fig. 3).

3. Remove the 3 screws retaining the remote control assembly. Disconnect the remote control rod from the retaining clip and remove the remote control.

4. Transfer the remote control rod to the new remote control. Position the lock remote control in the door and loosely install the 3 retaining screws.

5. Connect the remote control rod retaining clip, and then connect the rod to the bellcrank.

6. Tighten the lock remote con-

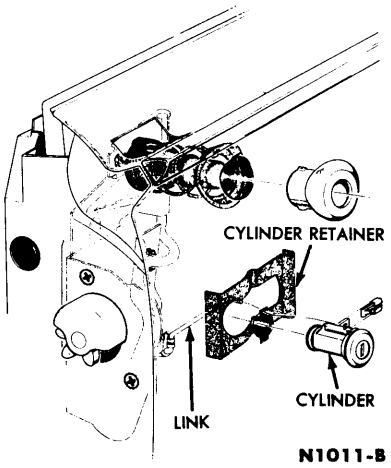

FIG. 5—Door Lock Cylinder

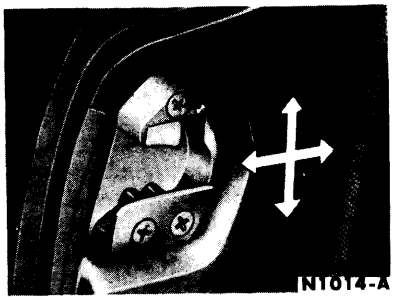

FIG. 6—Door Lock Striker Plate

trol retaining screws. Install the plastic water shield, the door trim panel, and the hardware (see Part 11-2).

STRIKER PLATE ADJUSTMENT

1. The door must be properly aligned before adjusting the striker plate. **The striker plate is not meant to correct door sag.**

2. Loosen the screws and move the striker plate **up** or **down** so that the level surface of the auxiliary plate is approximately 1/32 inch above the bottom of the roller (Fig. 6).

3. Scribe a pencil mark on the pillar to maintain the **up** and **down** adjustment, then move the striker plate **in** or **out** to provide a flush condition between the door and the quarter panel.

Shims must be added or removed between the striker plate and the lock pillar so that the rotor engages in the center of the striker plate teeth.

2 POWER WINDOWS

TROUBLE CHECKS

Before making any of these checks, make sure the battery is fully charged, and turn the ignition switch to the accessory position.

ALL WINDOWS DO NOT OPERATE

1. Connect a voltmeter or test light from a ground to the power window relay black wire connected to the 30-ampere circuit breaker (Fig. 7). If no voltage is available, replace the 30-ampere circuit breaker and/or replace the connecting black wire.

2. Connect a voltmeter from a ground to the red wire terminal of the power window relay. If no voltage is available, repair or replace the ignition switch or the red wire from the ignition switch to the relay.

3. Connect a voltmeter from a ground to the remaining terminal (black wire) of the power window relay (Fig. 7). If no voltage is available, replace the power window relay.

4. Check the black wire at the master control switch for voltage. If no voltage is available, repair or replace the black wire from the master control switch to the power window relay.

5. At this point the trouble causing all windows not to operate should have been found and corrected. The chances of having all of the control switches, ground circuit breakers, switch to motor wires, or motors defective at the same time are very remote.

ONE WINDOW DOES NOT OPERATE

1. Operate the switch and listen for the noise of the motor running free. If the motor is running, it is loose and has pulled away from its coupling.

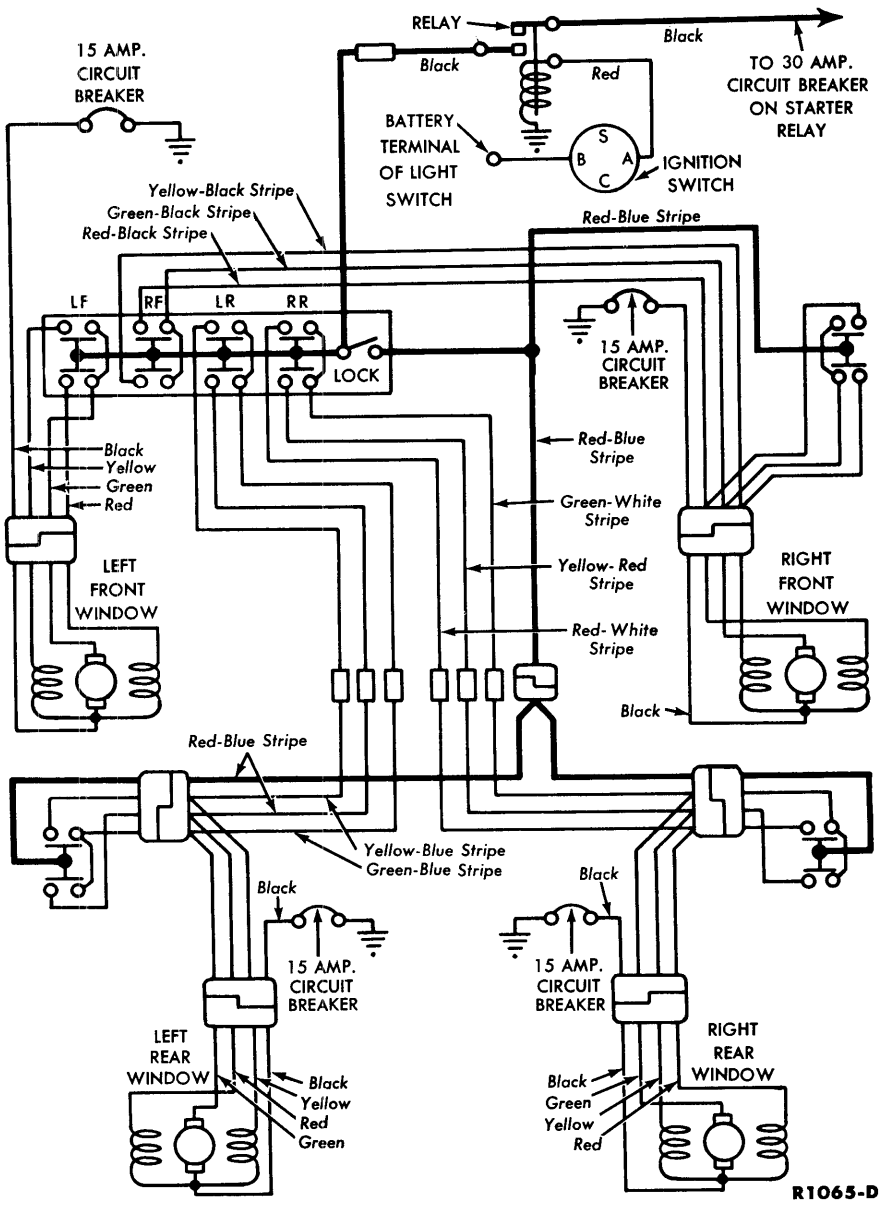

FIG. 7—Power Window Wiring Diagram

2. Short out the ground circuit breaker of the inoperative window, and operate the switch. If the motor runs, replace the circuit breaker.

3. Disconnect the green wire at the motor and check it for voltage when the switch is operated. If no voltage is available, check for voltage at the green wire terminal of the switch. If there is voltage at the switch, repair or replace the green wire from the switch to the motor.

4. In case there is no voltage at the switch green wire terminal when the switch is operated, check for voltage at the switch red-blue stripe wire terminal. Replace the switch if there is voltage at the red-blue stripe wire terminal and none at the green wire terminal. Repair or replace the red-blue stripe wire if no voltage is available at the switch.

5. If voltage is available at the motor green wire terminal, check the red and yellow wires for voltage. If voltage is available at the red and yellow wires, replace the motor.

WINDOW OPERATES IN ONE DIRECTION ONLY

1. Check the window operation with both switches. If the window operates properly with one switch and not the other, check the switch and the red and yellow wires for voltages. Replace the switch or the wires as necessary.

2. If both switches operate the window in only one direction, check the red and yellow wires at the motor for voltage. If voltage is available, a field coil is open and the motor must be replaced.

WINDOW OPERATES OPPOSITE TO SWITCH

1. If a window goes up when it should go down, the switch is incorrectly mounted on the trim panel.

WINDOW OPERATES SLUGGISHLY

1. Check the regulator and window runs for binding. Adjust the runs, repair and lubricate the regulator. Lubricate the runs with silicone lubricant.

2. Check for frayed insulation where the wires may partially ground. Check for loose connections which will cause high resistance and make sure paint is not insulating the ground wires or ground circuit breakers where they attach to the body.

3. Connect an ammeter between the black motor wire and a ground. Current draw for normal operation should not exceed 20 amps. Current draw when the mechanism is against a stop would be within 30-50 amps., depending upon the motor temperature. If either check shows excessive amperage and the windows are properly adjusted, the motor should be replaced.

4. Disconnect the motor from the regulator. Connect an ammeter in series with the ground wire, and operate the switch. The motor no-load current draw should not exceed 14 amps at 12 volts. If the current draw does not meet these specifications, the motor must be replaced.

REPLACEMENT PROCEDURES

The power regulators are basically the same for all models, whether the regulator is installed in a front door, or quarter panel. In view of this, repair procedures are given for one regulator and will apply to all.

REGULATOR MOTOR REPLACEMENT

The power window regulator motor can be replaced without removing the entire regulator from the door or quarter panel. After the trim panel is removed, disconnect the motor wires at the connector, remove the motor mounting nuts and the motor brace, and pull the motor free of the rubber coupling.

POWER REGULATOR REPLACEMENT

To remove and install the power regulator assembly, including the motor, follow the appropriate removal and installation procedures given for the manual regulator. Connecting the wires presents no problem because of the type of wire connectors used.

If the regulator arm tension spring requires replacement, is can be replaced after the regulator is removed. This operation should be performed with the arm at its point of maximum upward travel so that there is a minimum of spring tension to overcome.

3 VENT AND DOOR WINDOWS

VENT WINDOW REPLACEMENT

1. Remove the door trim panel (see Part 11-2), and loosen the water shield enough to reveal the door panel access holes (Fig. 8).

2. Remove the 2 bolts retaining the vent window assembly to the door (Fig. 8).

3. Remove the front run lower bracket to door panel bracket retaining nut and washer.

4. Remove the vent window adjusting screw nut and washer (Fig. 8).

5. Turn the vent window adjusting screw and the front run adjusting screw in enough to clear the door inner panel.

6. Remove the screw retaining the door weatherstrip to the leading edge of the vent window frame and pry the weatherstrip from the frame.

7. Remove the vent window and division bar as an assembly.

8. Transfer or replace the front run assembly to vent window and division bar assembly.

9. Remove the run and division bar assembly from the vent window.

10. Remove the vent window lower pivot stud retaining nut, washer, and tension spring. Then, remove the vent window upper hinge to vent glass retaining screws, and remove the vent glass and retainer.

11. To replace the vent window weatherstrip, remove the vent window frame weatherstrip retaining screws and remove the weatherstrip. Apply a rubber lubricant to the new weatherstrip. Then, position the weatherstrip to the vent window frame. Install the weatherstrip retaining screws.

12. Position the vent glass and retainer assembly with the stop washers to the vent frame. Install the vent window lower pivot stud tension spring, washer, and nut. Then, install the vent hinge retaining screws.

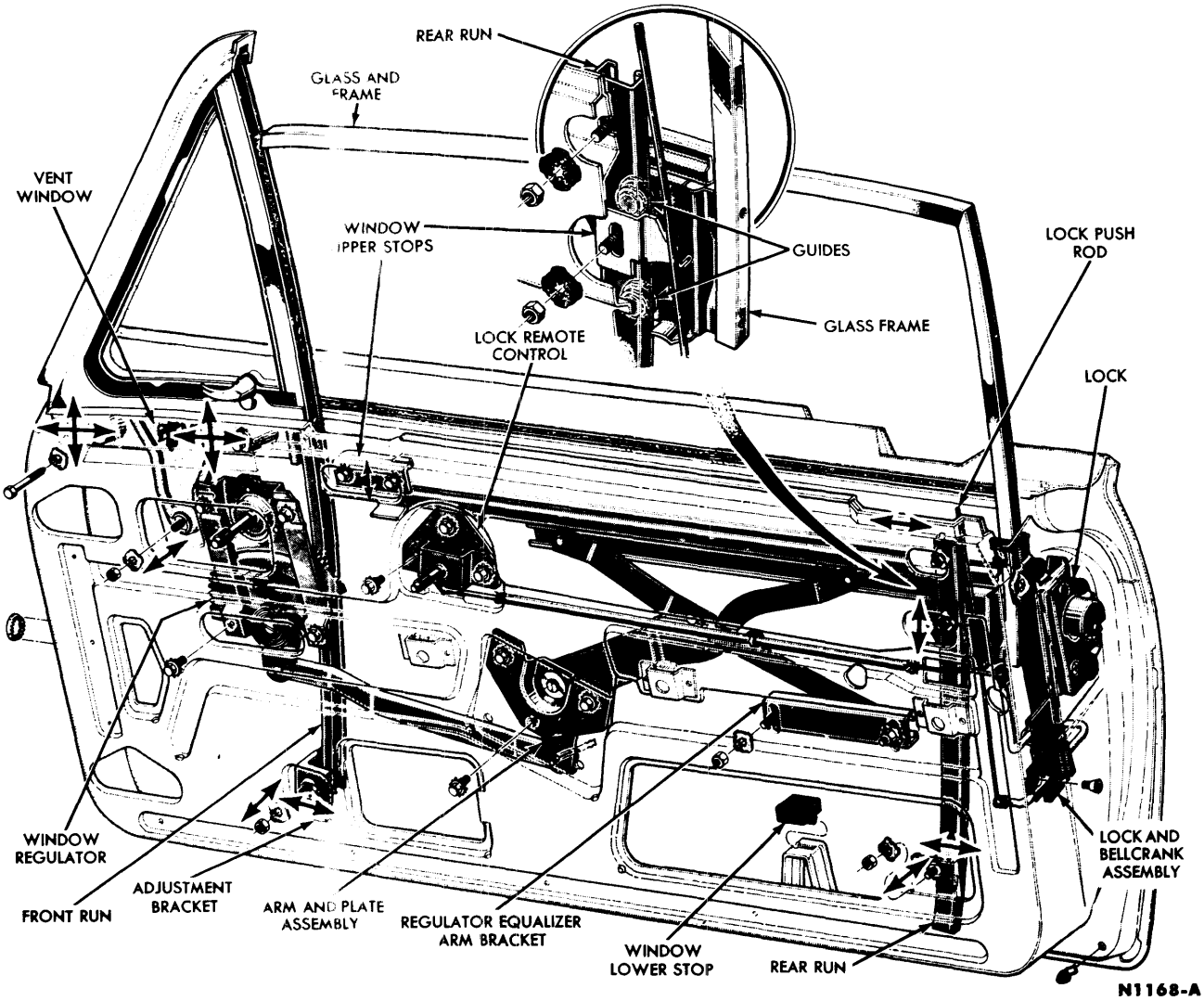

FIG. 8—Door Window Mechanism Adjustments

13. Adjust the vent tension spring.

14. Position the vent window assembly into the door, being careful to align the front run with the leading edge of the door glass.

15. Install the vent window frame to door panel retaining bolts (Fig. 8).

16. Install the vent frame adjusting screw washer and retaining nut, and snugly tighten the screw.

17. Loosely install the window run lower adjusting screw washer and retaining nut.

18. Install the door weatherstrip with cement and retaining screw.

19. Adjust the vent window assembly to the body opening (Fig. 8), and tighten the retaining nuts and bolts.

20. Install the water shield and the trim panel (Part 11-2).

DOOR WINDOW ADJUSTMENTS

VERTICAL ADJUSTMENTS

To level the glass with the belt line, raise or lower the regulator arm equalizer bracket (Fig. 8).

To limit the window travel and align the top of the glass frame with the vent assembly, adjust the window upper stops.

FORE-AND-AFT ADJUSTMENTS

To obtain a snug fit between the front run and the glass, loosen the window guide upper and lower retaining nuts (Fig. 8), and with the glass in the down position, adjust the guide as required. Tighten the guide lower retaining nut, raise the glass, and then adjust and tighten the guide upper retaining nut.

LATERAL (IN-AND-OUT) ADJUSTMENTS

To tilt the top of the glass frame for parallel alignment with the roof rail weatherstrip, adjust the window run and guide lower adjustment screw as required. (Fig. 8).

DOOR GLASS REPLACEMENT

1. Remove the trim panel and loosen the water shield enough to reveal the access holes (see Part 11-2).

2. Disconnect the regulator arms from the glass channel roller assembly by pulling the roller clip out to release the regulator arm pin (Fig.9).

3. Remove the window upper stops.

4. Loosen the window lockside

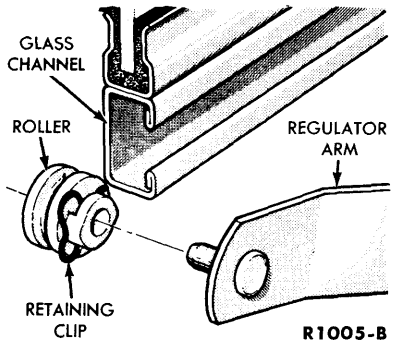

FIG. 9—Glass Channel Roller

guide upper retaining nut. Remove the lockside guide lower retaining nut and washer.

5. Raise the glass and disconnect the lockside guide from its lower retaining bracket, and then remove the glass assembly.

6. Remove the glass frame retaining screws, and then remove the glass channel, glass weatherstrip, frame, and glass tape (Fig. 13).

7. Install the glass frame on the glass (Fig. 13), using new glass tape. Install the glass channel and weatherstrip. Trim the excess glass tape.

8. Position the door glass assembly in the door. Install the regulator arm pins in the roller assemblies.

9. Install the lockside guide to its retaining bracket. Install the window upper stops and adjust the window assembly (Fig. 8).

10. Install the water shield with M-2G17-A cement, and install the trim panel.

REGULATOR REPLACEMENT

1. Remove the trim panel and loosen the water shield enough to reveal the access holes.

2. Block the window in the raised position. Remove the regulator arm retaining clip at the arm and plate assembly and remove the regulator arm from the plate assembly.

If the arm and plate assembly must be removed, lower the window and disconnect the arms from the two glass roller assemblies. Then remove the arm and plate assembly retaining screws and remove the assembly. This can be done without removing the regulator or the door glass.

3. Remove the regulator assembly retaining screws and remove the regulator assembly.

4. Position the window regulator assembly in the door panel and install the retaining screws.

If the arm and plate assembly was removed, install the assembly in the door, and connect the arms to the glass channel roller assembly.

5. Position the regulator arm on the arm and plate assembly and install the retaining clip. Remove the window block.

6. Install the water shield with M-2G17-A cement. Seal the water shield holes with caulk and sealer (B6A-19563-A). Install the trim panel.

4 QUARTER WINDOW

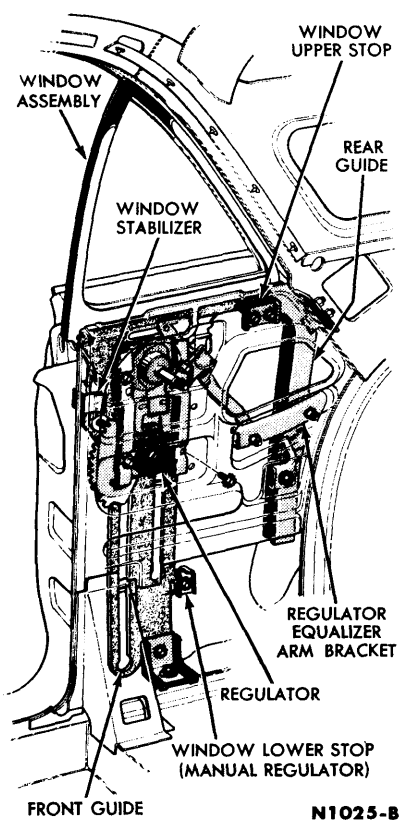

FIG. 10—Quarter Window

QUARTER WINDOW AND REGULATOR REPLACEMENT

1. Remove the quarter trim panel and remove the water shield.

2. Remove the quarter window upper stop retaining bolts, and remove the stop (Fig. 10).

3. On a manual regulator, remove the window lower stop.

4. Pull the regulator roller retaining clip and disconnect the regulator arm from the glass channel (Fig. 9).

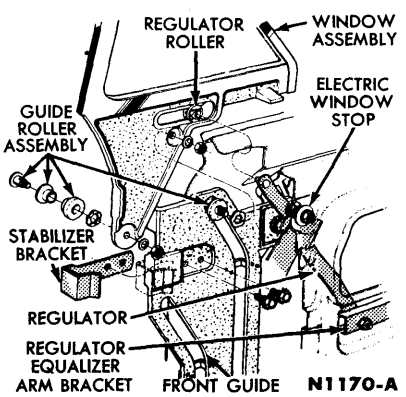

FIG. 11—Quarter Window Rollers

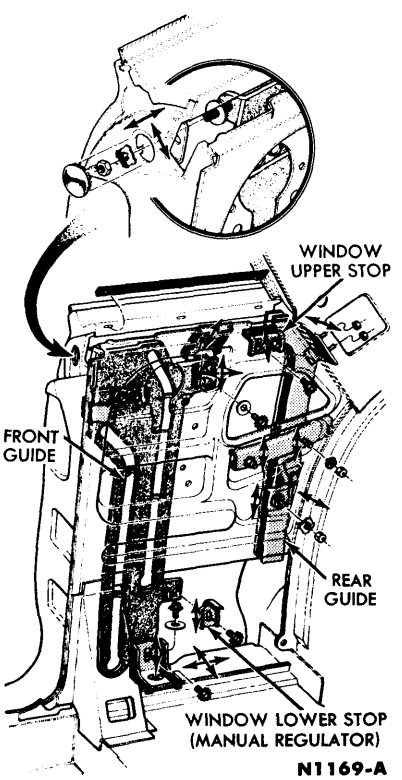

FIG. 12—Quarter Window Adjustments

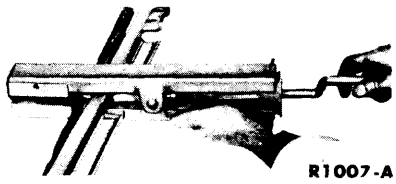

FIG. 13—Remove or Install Glass Channel

5. Lower the glass, lift the glass from the front guide (Fig. 11), and remove the glass assembly.

6. To remove the glass frame, pull down the weatherstrip from the forward edge of the glass assembly, remove the frame retaining screws, and remove the frame and glass tape. Remove the glass channel (Fig. 13).

7. Install the glass in the channel and install the glass frame, using new glass tape. Trim the excess tape. If the regulator doesn't require replacement omit steps 8 and 9.

8. Remove the window regulator retaining bolts, slide the regulator equalizer arm roller out of the bracket, and remove the regulator thru the access hole in the quarter panel.

9. Transfer the roller to the new regulator equalizer arm, position the regulator in the quarter panel, and install the retaining bolts.

10. Install the glass assembly in the guides, the roller in its channel, and the regulator arm in the roller.

11. Install the window stops.

12. Adjust the quarter window assembly as required (Fig. 12).

13. Install the water shield and quarter trim panel.

5 WINDSHIELD AND BACK WINDOW

WINDSHIELD REPLACEMENT

1. Remove the sun visor brackets, windshield garnish mouldings, instrument panel extensions, and the rear view mirror and arm.

2. Remove the windshield wiper arms, the wiper pivot shaft cover plates, and the cowl ventilator grille.

3. Remove the windshield outer corner mouldings (Fig. 14). Remove the windshield side mouldings, and then remove the upper moulding retaining screws. On a convertible model, remove the upper moulding.

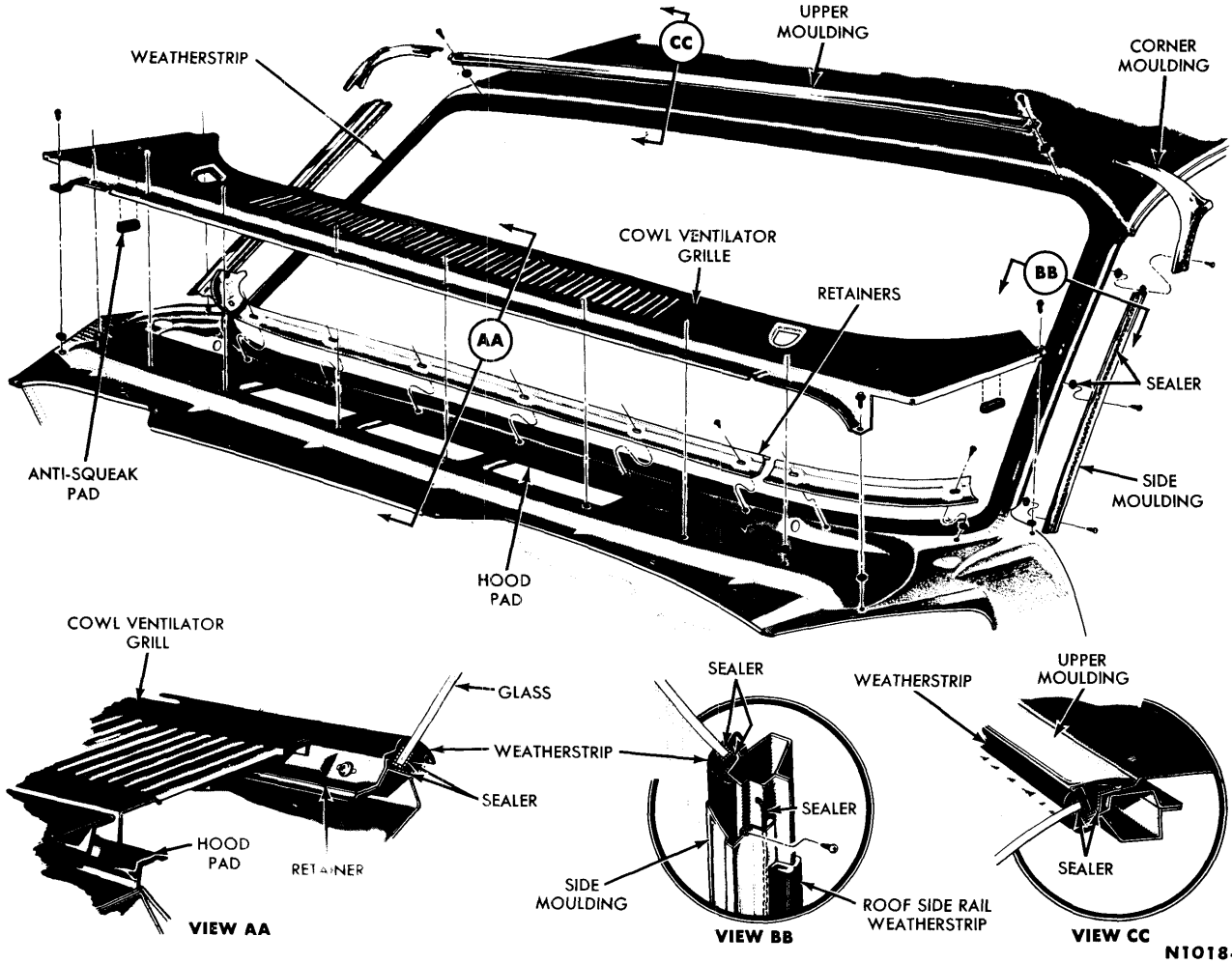

FIG. 14—Hardtop Model Windshield and Exterior Mouldings

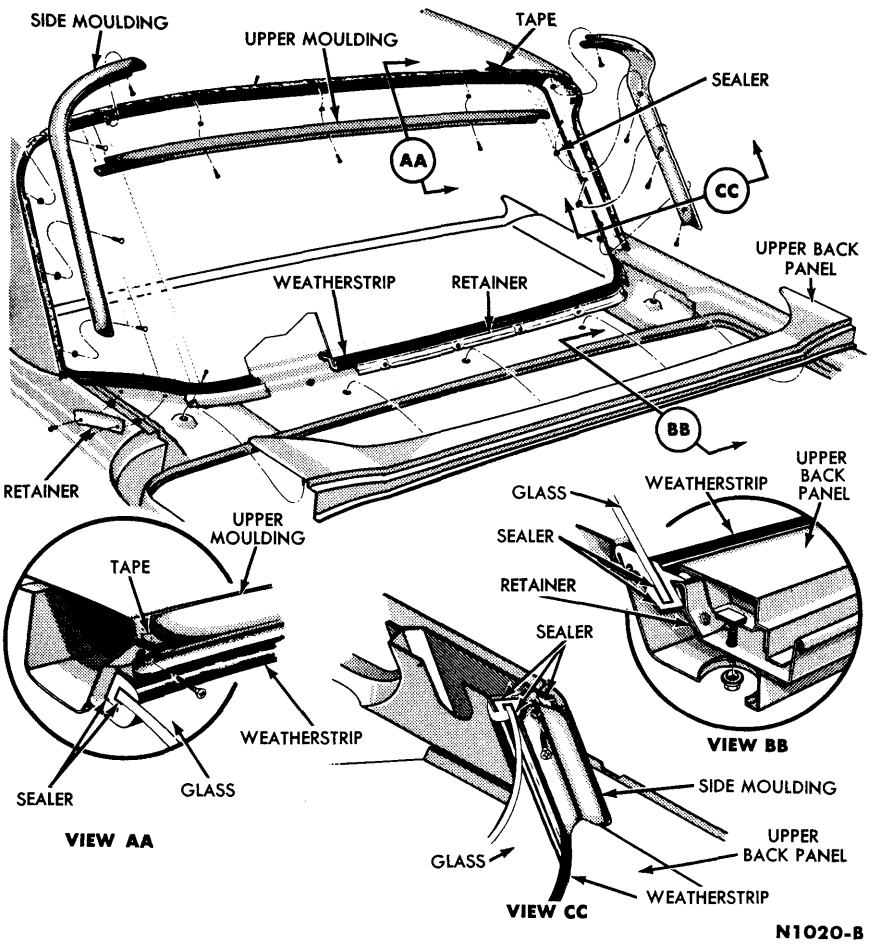

FIG. 15—Back Window and Exterior Mouldings

4. Remove the windshield center and each side retainer (Fig. 14).

5. From inside the car, loosen the weatherstrip from the windshield opening flange, and push the windshield and weatherstrip assembly out of the opening.

6. Remove the weatherstrip from the glass. On a hardtop model, remove the upper moulding from the weatherstrip.

7. After cleaning the old sealer from the windshield opening flange, glass, and weatherstrip, apply sealer to the weatherstrip in the groove for the glass, and install the weatherstrip on the windshield glass. On a hardtop model, install the windshield upper moulding in the weatherstrip.

8. Apply a heavy bead of caulk and sealer (B6A-19563-B) all around the windshield opening flange.

9. After coating the weatherstrip mounting surfaces with RuGlyde, install a draw cord in the weatherstrip groove and overlap the cord about 18 inches at the top center.

10. After positioning the windshield assembly in the opening (with a helper applying pressure from the outside), pull the weatherstrip over the flange with the draw cord.

11. With a sealer gun, apply a bead of caulk and sealer (B6A-19563-B) between the weatherstrip and glass.

12. Install the windshield center and each side retainer.

13. On a convertible model, position the windshield upper moulding on the windshield header.

14. Install the windshield upper moulding retaining screws.

15. Apply sealer to the windshield side and corner mouldings, and install the mouldings.

16. Cement the hood pad to the cowl with cement, if it is loose, and install the cowl ventilator grille.

17. Install the right and left wiper shaft cover plates.

18. Apply rubber cement to the body right and left front pillar, and install the roof side rail weatherstrip (Fig. 14).

19. Install the windshield upper and side garnish mouldings, sun visor assemblies, and the rear view mirror arm and mirror assembly.

20. Test the windshield for water leaks and seal as necessary. Install the wiper arms and blades.

BACK WINDOW REPLACEMENT

1. Remove the back window outer side moulding retaining screws from each side moulding and remove the mouldings (Fig. 15).

2. Remove the screws retaining the upper outside moulding and remove the moulding (Fig. 15).

3. Open the deck lid, remove the upper back panel attaching nuts, and remove the panel.

4. Remove the back window weatherstrip center and side retainers (Fig. 15).

5. Remove the window garnish moulding cover. Remove the left and right inside moulding retainer screws and remove the mouldings.

6. From the inside, loosen the weatherstrip at the flange, and push the window and weatherstrip assembly out of the opening.

7. Remove the weatherstrip from the glass. Clean the old sealer from

the weatherstrip and the back window body flange.

8. Apply caulk and sealer (B6A 19563-B) to the back window opening flange and at the holes for the attaching clips.

9. Apply sealer to the weatherstrip in the groove for the glass, and position the weatherstrip on the glass.

10. Apply RuGlyde to the flange area of the weatherstrip, and install a draw cord in the weatherstrip flange crevice with about a 12-inch overlap at the top center.

11. Position the glass assembly in the opening, have a helper apply pressure on the outside, and pull the weatherstrip over the flange with the draw cord.

12. Install the window weatherstrip retainers at the outer bottom edge of the back window (Fig. 15).

13. Position the window outside upper back panel and install the attaching bolts.

14. Install the back window upper moulding, and then install the side mouldings (Fig. 15).

15. Position the left and right back window garnish mouldings and install the retaining screws. Install the garnish moulding center cover.

16. Check the window for water leaks and seal as necessary.

6 DECK LID—HARDTOP MODEL

New deck lids are furnished in prime paint without hardware. All usable hardware parts should be removed from the old deck lid so they can be installed on the new lid.

Before the old deck lid is removed and disassembled, time will be saved if the new deck lid is prepared for installation first. Inspect the new deck lid for dings and other minor damage, repair as necessary, and sand and paint it. While it is drying, remove and disassemble the old lid. When the new lid is dry, install the weatherstrip and hardware.

REPLACEMENT

1. Remove all hardware from the deck lid.

2. Remove the hinge to deck lid bolts (Fig. 16), and remove the deck lid. Remove the deck lid ornament and lock from the deck lid. If it is necessary to remove the hinges, remove the hinge bracket bolts (Fig. 16).

3. If the hinges were removed, install the new hinges at the same approximate location as the old hinges. Position the deck lid and install the hinge to deck lid bolts finger-tight.

4. Close the deck lid gently to check the fit. Adjust the deck lid and hinges for proper fit. Adjust the striker plate.

CHECKING DECK LID FIT

After the deck lid has been fitted for a good exterior appearance, check the fit of the weatherstrip to the flange. Chalk the flange all the way around, and close the deck lid. Open the lid and check for a chalk mark all the way around the weatherstrip. If the chalk misses at any point, the flange should be bent to provide proper sealing.

ALIGNMENT

The deck lid can be shifted fore and aft, up and down, and from side to side as shown in Fig. 16. Care should be taken not to distort or mar the deck lid or body panel so that an unsightly appearance results.

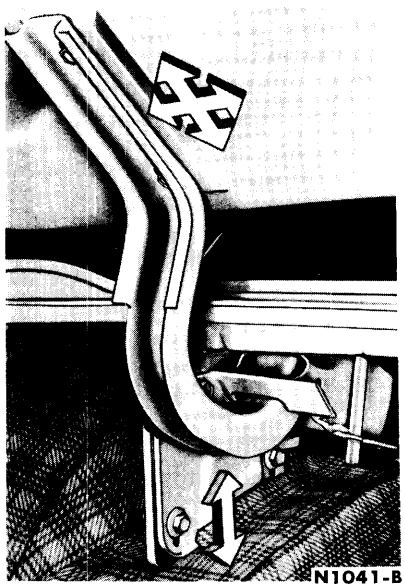

FIG. 16—Deck Lid Hinge and Adjustments

HINGE OR TORSION BAR REPLACEMENT

1. Prop the deck lid open.

2. Mark the hinge position on the lid and on the mounting bracket for reference when a new hinge is installed.

3. Remove each torsion bar using a long screwdriver and vise-grips, pry the anchor end of the torsion bar out of its adjustment notch (Fig. 16). **The bar must be securely held with the vise-grips.**

4. Remove the hinge attaching bolts from the deck lid and from the mounting bracket, and remove the hinge.

5. Position the hinge and partially tighten the mounting bolts.

6. Install each torsion bar, reversing the procedure in step 3.

7. Remove the prop and check the lid position. After any necessary adjustment, tighten the hinge attaching bolts. The farther rearward the anchor end is twisted, the greater the tension.

STRIKER PLATE ADJUSTMENT

The deck lid striker plate (Fig. 17) can be adjusted up or down by loosening the bolts and moving it to the desired position. If lateral movement of the striker plate is required, it can be tilted slightly to obtain free operation of the lock.

DECK LID LOCK

DECK LID LOCK CYLINDER REPLACEMENT

To replace the deck lid lock cylinder and sleeve, remove the nuts retaining the deck lid ornament, and remove the nut, washer, spacer, and extension from the lock cylinder and remove the assembly (Fig. 17).

To remove the lock cylinder from the sleeve, turn the key ⅛ turn clockwise from the locked position, and push the release pin down with a small punch. Pull the key and cylinder out of the sleeve.

When installing the cylinder in the sleeve, turn the key in the cylinder ⅛ turn clockwise from the locked position and insert the cylinder in the sleeve.

DECK LID LOCK REPLACEMENT

Remove the 3 lock retaining bolts and remove the lock (Fig. 17).

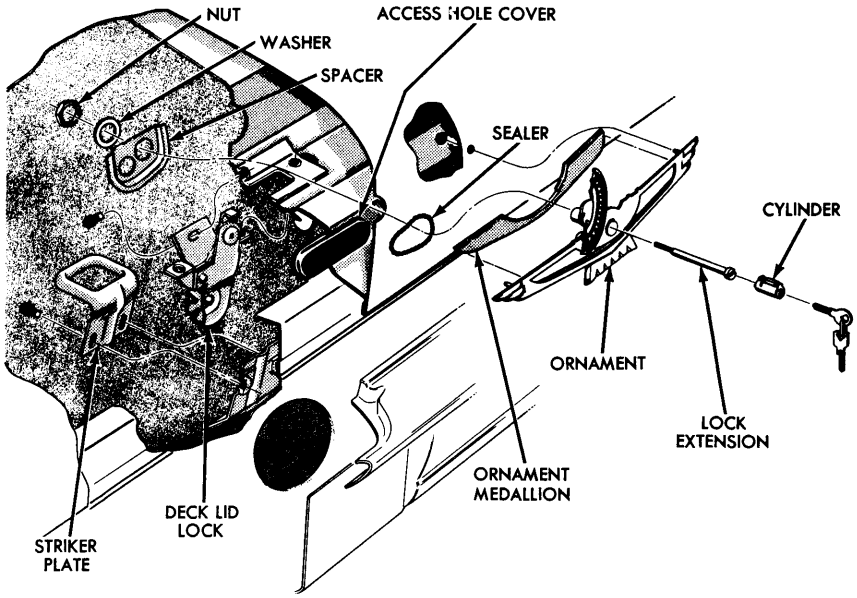

FIG. 17—Deck Lid Lock

The lock is not adjustable in the deck lid. Positioning of the striker in relation to the lock is accomplished entirely at the striker plate.

PART 11-4 CONVERTIBLE TOP

Section		Page
1	Top Operation	11-39
2	Deck Manual Opening Procedures	11-48
3	Electrical Checks	11-48
4	Mechanical and Hydraulic Checks	11-49
5	Trouble Diagnosis Guide	11-50
6	Assembly Replacements	11-52
7	Maintenance and Adjustments	11-54

1 TOP OPERATION

The Thunderbird convertible top is lowered into and erected out of the luggage compartment. The cycles are automatic with the exception of manually locking or unlocking the windshield header clamps and opening or closing the rear window. The top operation is divided into the following two cycles:

A. Top Retract Cycle
1. Deck Lid Unlock
2. Deck Lid Open
3. Package Tray Extend
4. Top Retract
5. Deck Lid Close
6. Deck Lid Lock

B. Top Erect Cycle
1. Deck Lid Unlock
2. Deck Lid Open
3. Top Erect
4. Package Tray Fold
5. Deck Lid Close
6. Deck Lid Lock

Hydraulic pressure is used to raise and lower both the top and the deck lid (Fig. 1). The hydraulic pressure is produced by a reversible-electric motor and pump assembly and the top and deck lid linkage are actuated by the hydraulic cylinders. Three electric-solenoid valves are placed in the hydraulic lines to control the flow of fluid to the desired cylinders.

The deck lid is unlocked and locked by jack screws (Fig. 2). A reversible-motor is used to operate the 2 jack screws thru drive cables.

The package tray is extended and folded by a motor and transmission mounted to the tray right pivot arm.

The deck lock screw motor and tray motor are protected by a 5-ampere circuit breaker in the ground circuit. The hydraulic-pump motor (and the entire circuit) is protected by a 50-ampere circuit breaker in the feed circuit (Fig. 4).

All circuits are protected by non-cycling circuit breakers. This type of circuit breaker will not reset itself until the control switch is released or the short circuit removed.

The power is supplied to the motors and solenoids thru 8 relays (6 of which are double-contact relays). Fig. 3 details the electrical circuits through the relays to the motors and solenoids. Fig. 4 shows the installation arrangement of the relays in the vehicle. The double-contact relays are used to close the power supply circuit to both a motor and the related solenoids (or the armature and field windings in the shunt-wound tray motor).

The instrument panel top control switch activates the top assembly (Fig. 5). A neutral switch relay is used to prevent top operation unless the transmission selector is placed in the neutral or park position. The ignition switch must be in the ON or ACC position and the neutral switch closed to energize the neutral switch relay, and close the control switch circuit (Fig. 4).

The top mechanism operation is controlled by 7 limit switches. These switches, actuated mechanically by the various panels or linkage, complete the supply circuit from the main control switch to the control relay coil windings. **The switch lead wires may be color coded violet and yellow, or red, white and yellow at the switch itself. However, the wire colors between connectors are as indicated in the circuit diagrams (Figs. 6 thru 17).**

A luggage compartment light is mounted on the deck lid and is on whenever the deck lid is unlocked. The power source for this light is at the cigar lighter socket terminal in the console. The lower contacts of the deck lock limit switch control the function of the light (Figs. 6 and 7).

TOP RETRACT CYCLE

This cycle starts with the top in the erected position and the deck lid closed and both locked. The top is manually unlocked, the rear window unfastened and rolled, and the top control switch is pressed and held.

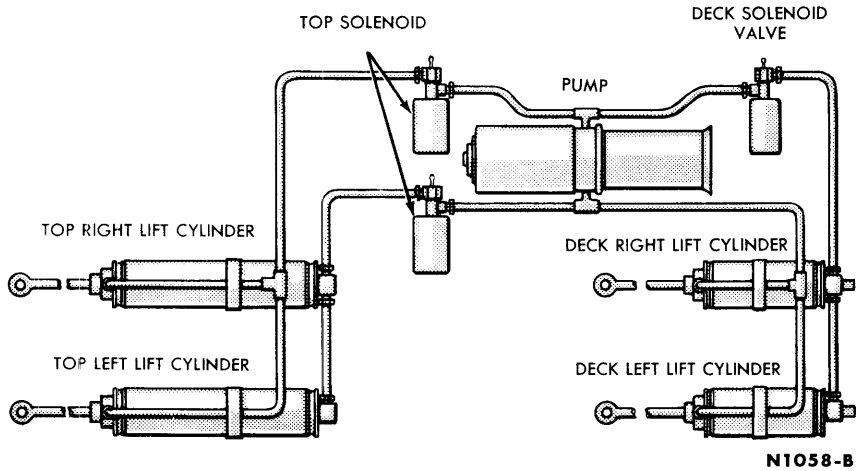

FIG. 1—Hydraulic System

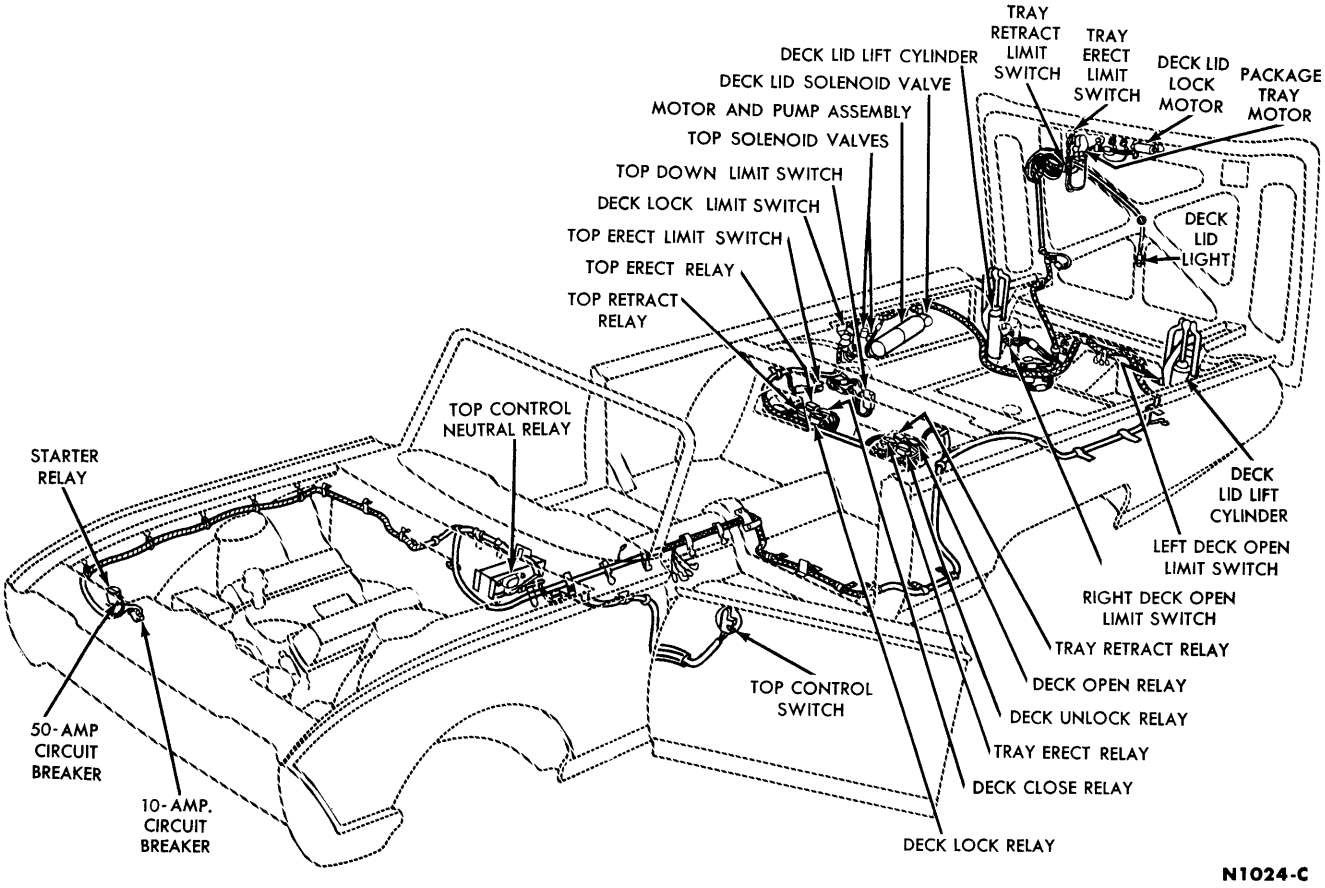

FIG. 2—Limit Switch Locations

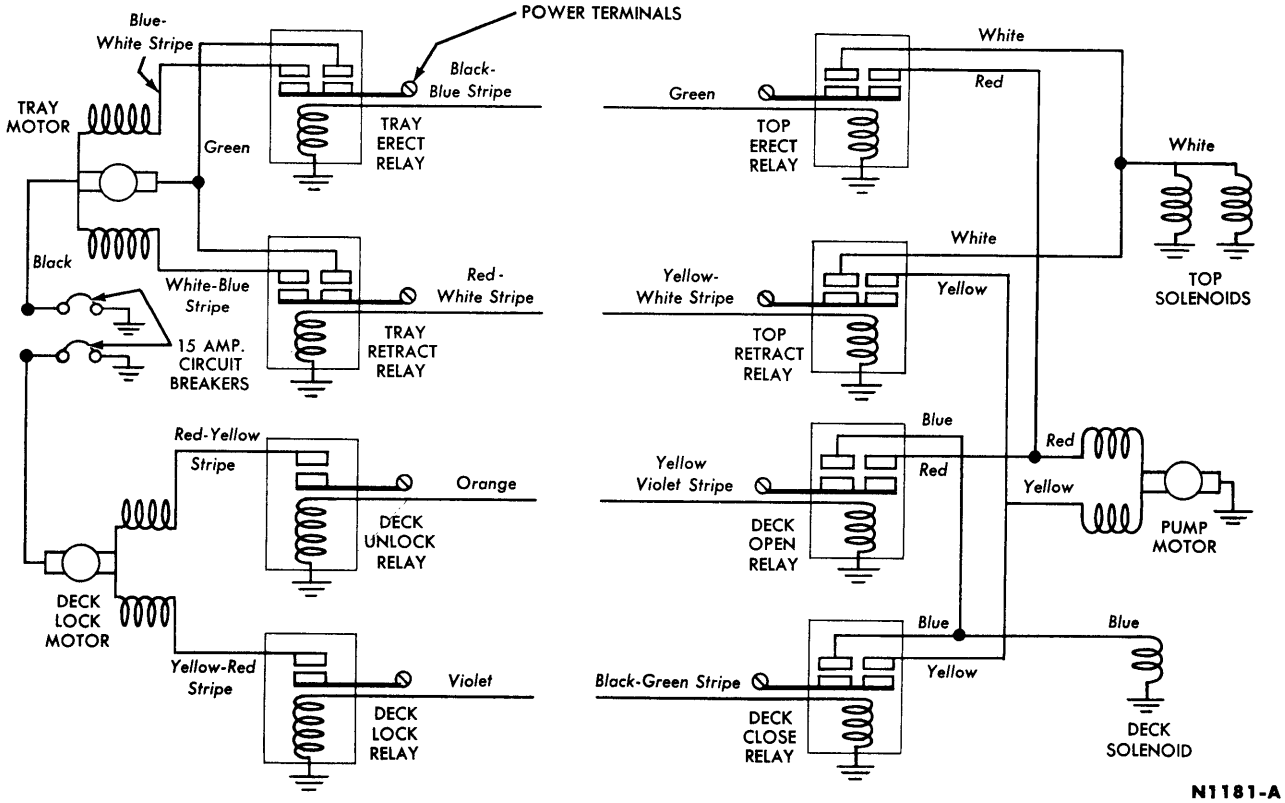

FIG. 3—Solenoid and Motor Feed Circuits

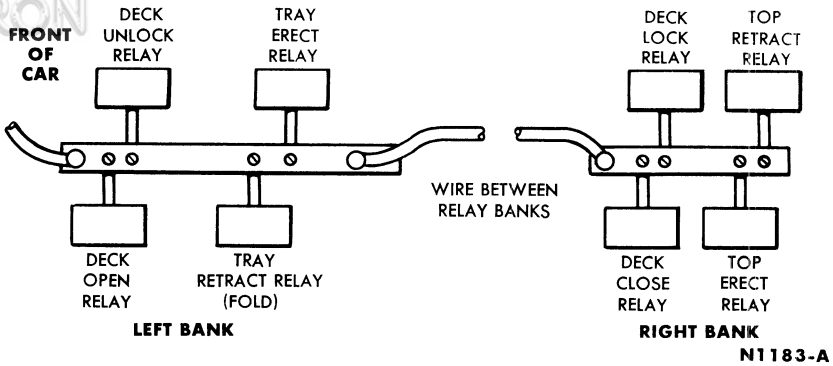

FIG. 4—Control Relay Locations

DECK LID UNLOCK

Current flows from the top control switch through the tray retract limit switch (Fig. 6), the left deck open limit switch, and the deck unlock power relay, and actuates the deck lock motor (Fig. 3).

DECK LID OPENING

The mechanical motion of unlocking the deck lid actuates the deck lock limit switch. As the switch plunger moves upward, contacts are closed to allow current to flow to the deck open power relay (Fig. 7), actuating the electric-hydraulic pump and deck solenoid valve (Fig. 3). Hydraulic pressure is delivered to the deck solenoid valve and then to the 2 deck cylinders, raising the deck lid.

PACKAGE TRAY EXTEND

When the deck lid is fully raised, the left deck open limit switch plunger is depressed, opening the deck open circuit and closing a second set of contacts (Fig. 8). Current flows through the left deck open limit switch, the tray erect limit switch, to the tray erect power relay. The tray motor is actuated (Fig. 3) and extends the package tray so that it is parallel with the deck lid. The mechanical action of the tray, as it reaches its travel limit, actuates the tray erect limit switch which opens the tray erect relay circuit and closes the top retract circuit (Fig. 9).

TOP RETRACT

Current flows from the tray erect limit switch through the top retract limit switch to the top retract power relay, actuating the electric-hydraulic motor and top solenoid valves (Fig. 3). Hydraulic pressure is delivered to the top solenoid valves and then to the 2 top cylinders, lowering the top. When the top reaches the fully retracted position, it actuates the top retract limit switch and de-energizes the top solenoid valves which shuts off the hydraulic pressure to the top cylinders.

DECK LID CLOSE AND LOCK

As the top retract limit switch opens and the top solenoid valves close, another set of contacts in the same switch close (Fig. 10), allowing current to flow to the deck lock relay and through the deck lock limit switch to the deck close power relay. After the deck solenoid valve is actuated, hydraulic pressure is delivered to the 2 deck cylinders, lowering the deck lid. The deck lock motor locks the deck. As the deck lock screws draw the deck lid down, the deck lock limit switch is opened (Fig. 11), stopping the electric-hydraulic pump. Releasing the top control switch cuts off the current to the locking circuit.

TOP ERECT CYCLE

This cycle starts with the top in the luggage compartment and the deck lid closed and locked.

DECK LID UNLOCK

With the top control switch pressed and held, current flows through the top retract limit switch (Fig. 12), and the right deck open limit switch, to the deck unlock power relay, actuating the deck lock motor. The motor drives the deck lock screws and unlocks the deck lid.

DECK LID OPENING

The mechanical motion of unlocking the deck lid closes the deck lock limit switch (Fig. 13). Current flows to the deck open power relay, actuating the electric-hydraulic pump and the deck solenoid valve. Hydraulic pressure is delivered to the deck solenoid valve and then to the 2 deck cylinders, raising the deck lid. As the deck lid reaches the fully open position, the right deck open limit switch opens, and stops the deck lock motor and electric-hydraulic pump.

TOP ERECT

When the right deck open limit switch opens, another set of contacts in the same switch close (Fig. 14). Current then flows through the top erect limit switch to the top erect power relay, actuating the electric-hydraulic pump and top solenoid valves. Hydraulic pressure is delivered to the top solenoid valves and then to the 2 top cylinders,

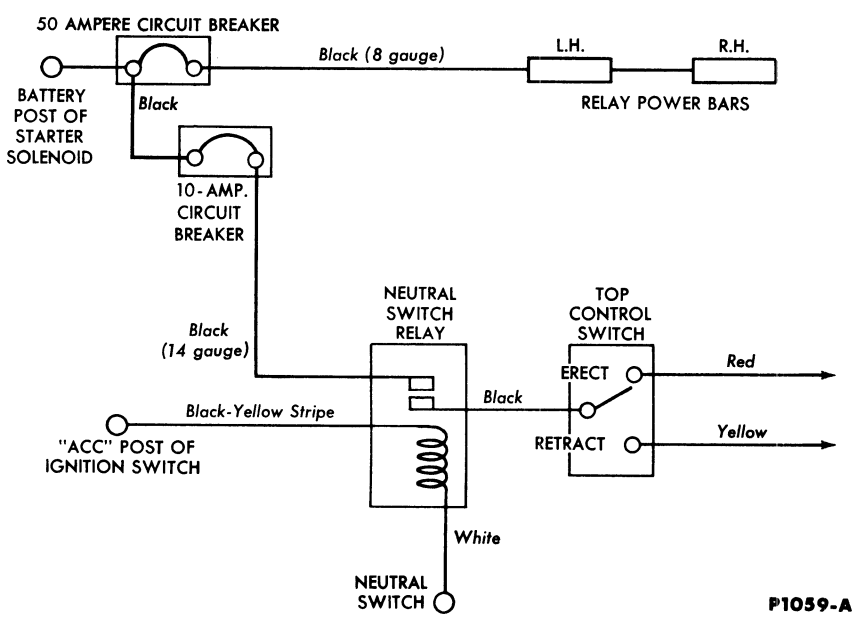

FIG. 5—Top Control Switch and Relay Power Circuits

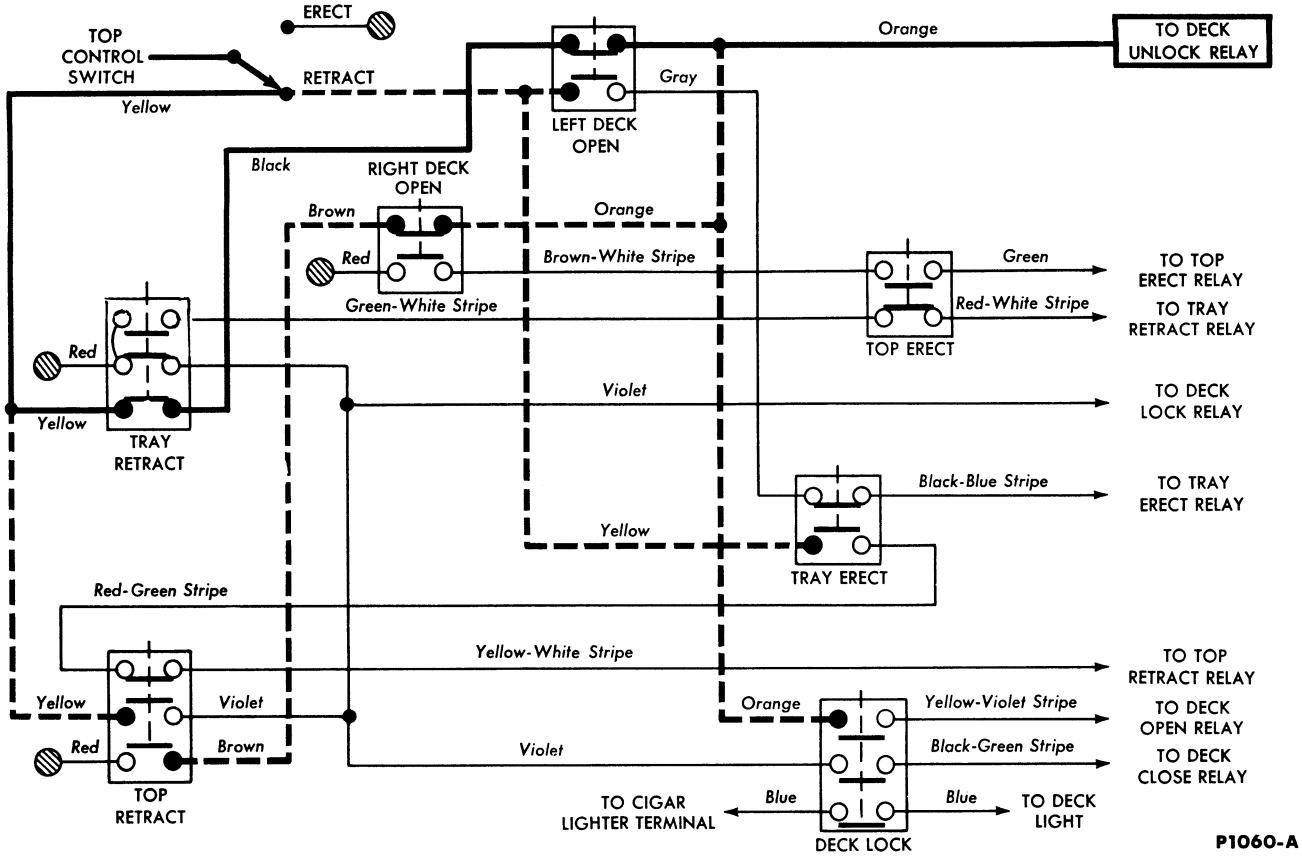

FIG. 6—Deck Lid Unlock—Top Retract Cycle

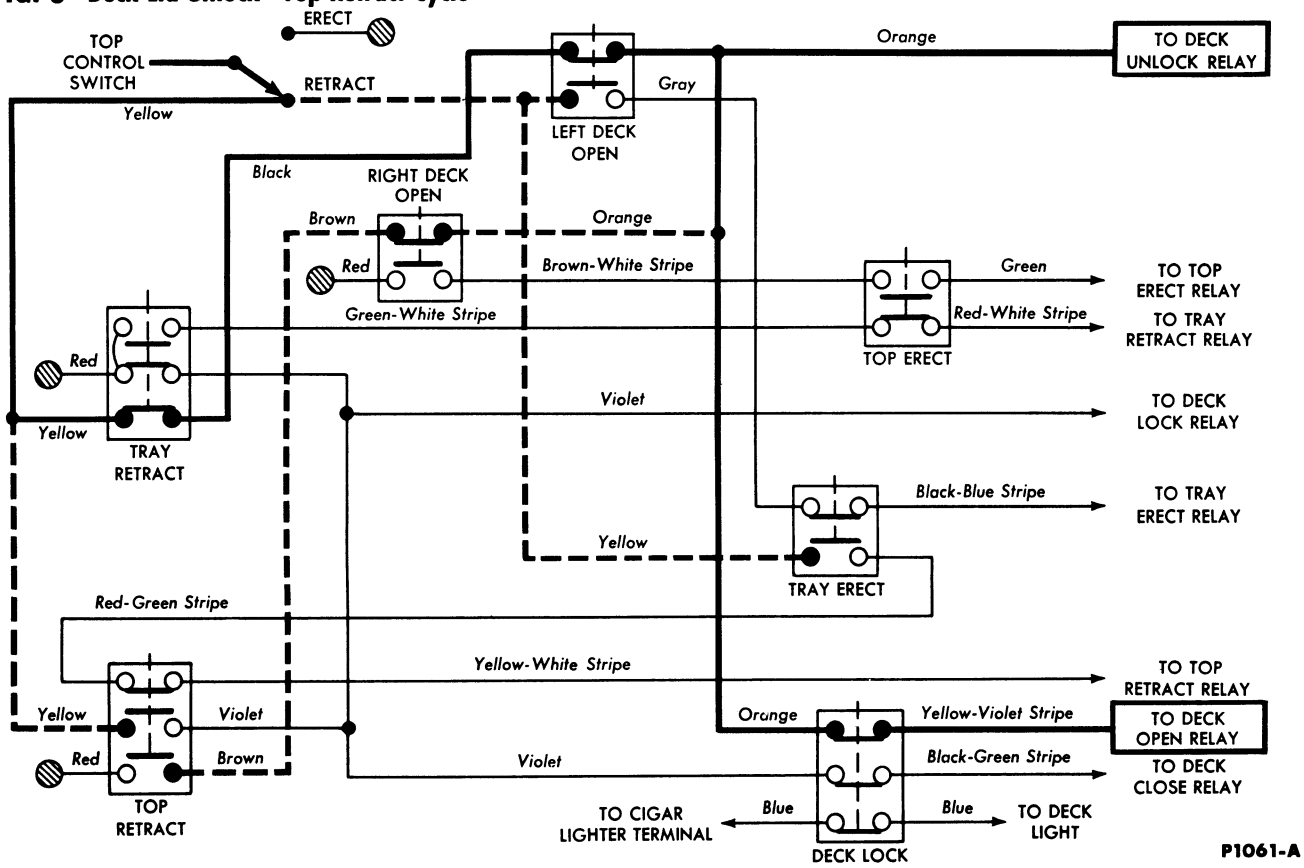

FIG. 7—Deck Lid Open—Top Retract Cycle

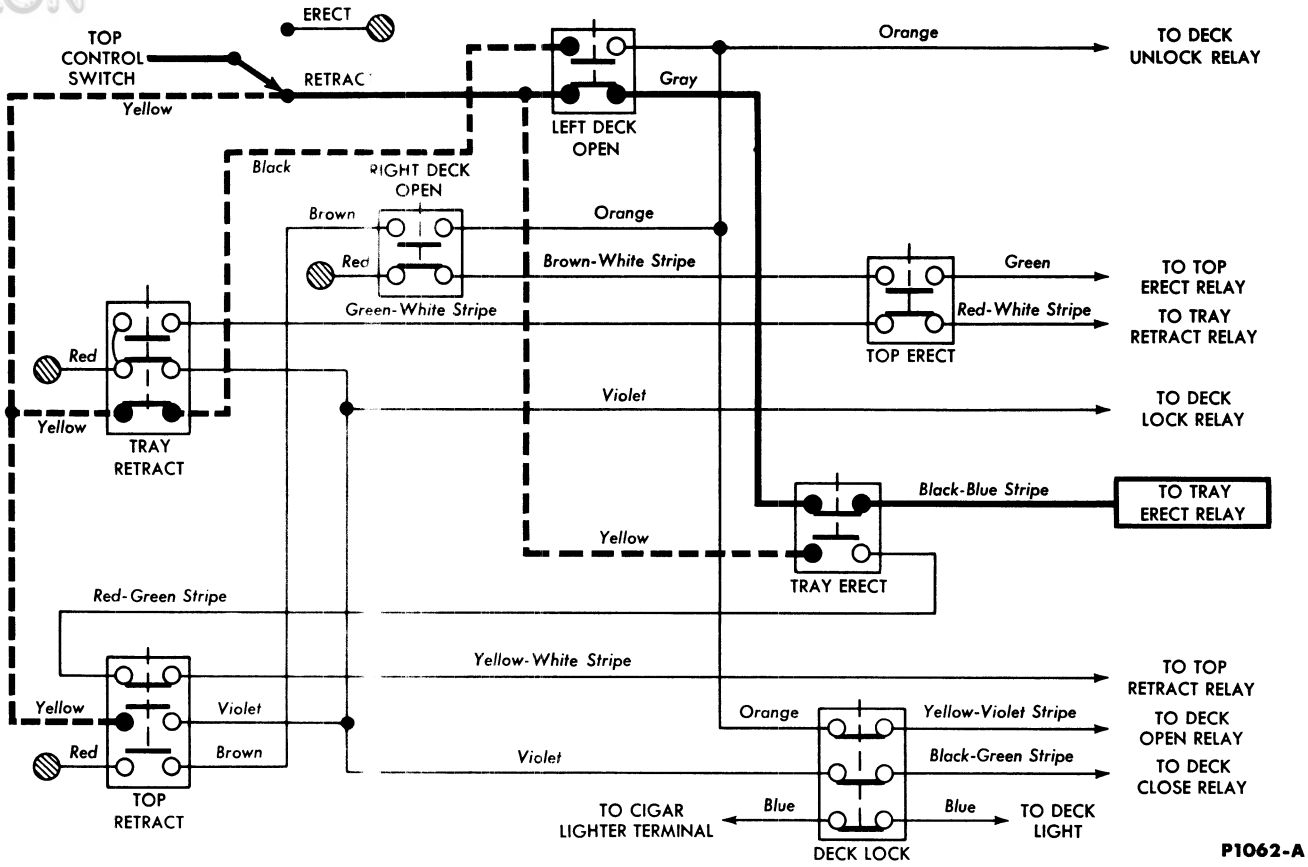

FIG. 8—Package Tray Extend—Top Retract Cycle

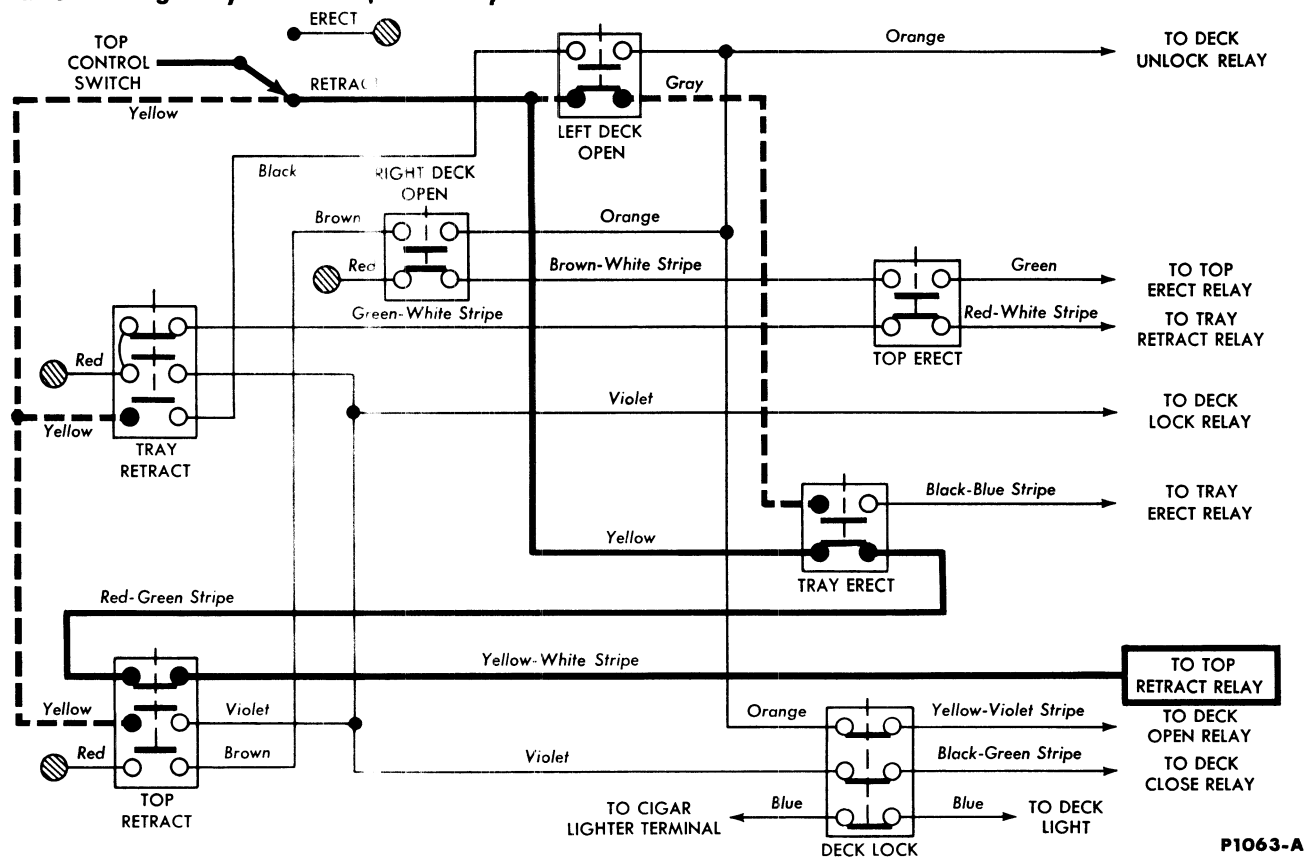

FIG. 9—Top Retract—Top Retract Cycle

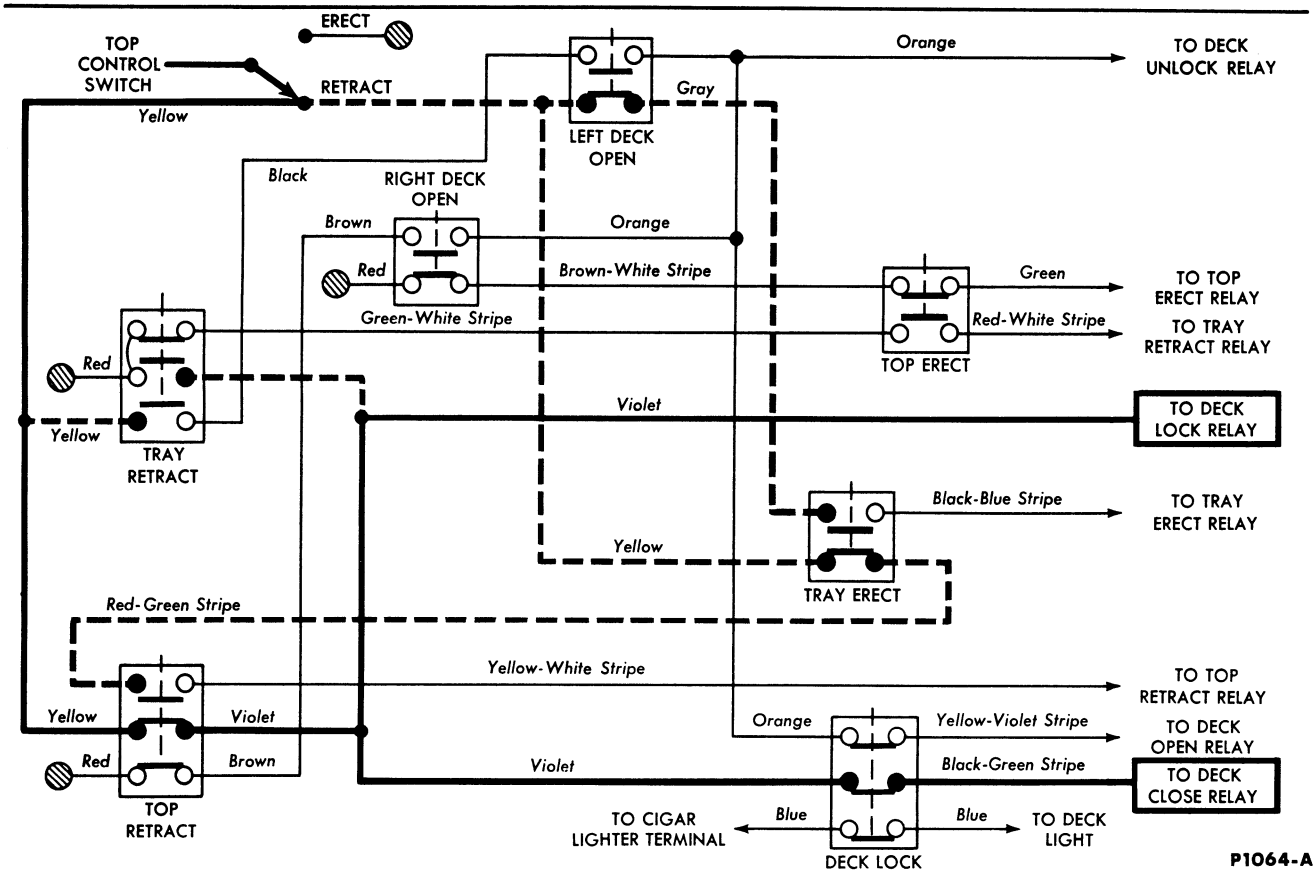

FIG. 10—Deck Lid Close—Top Retract Cycle

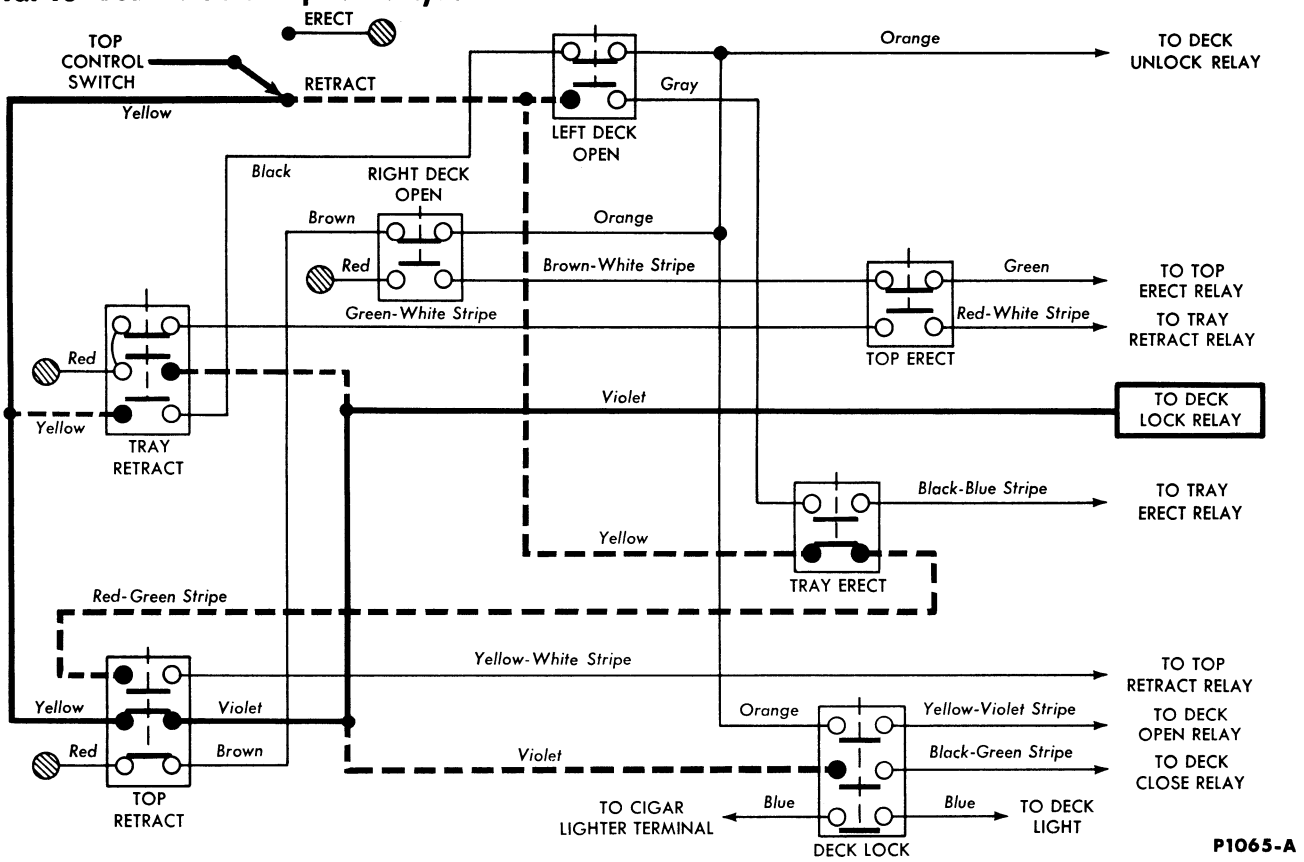

FIG. 11—Deck Lid Lock—Top Retract Cycle

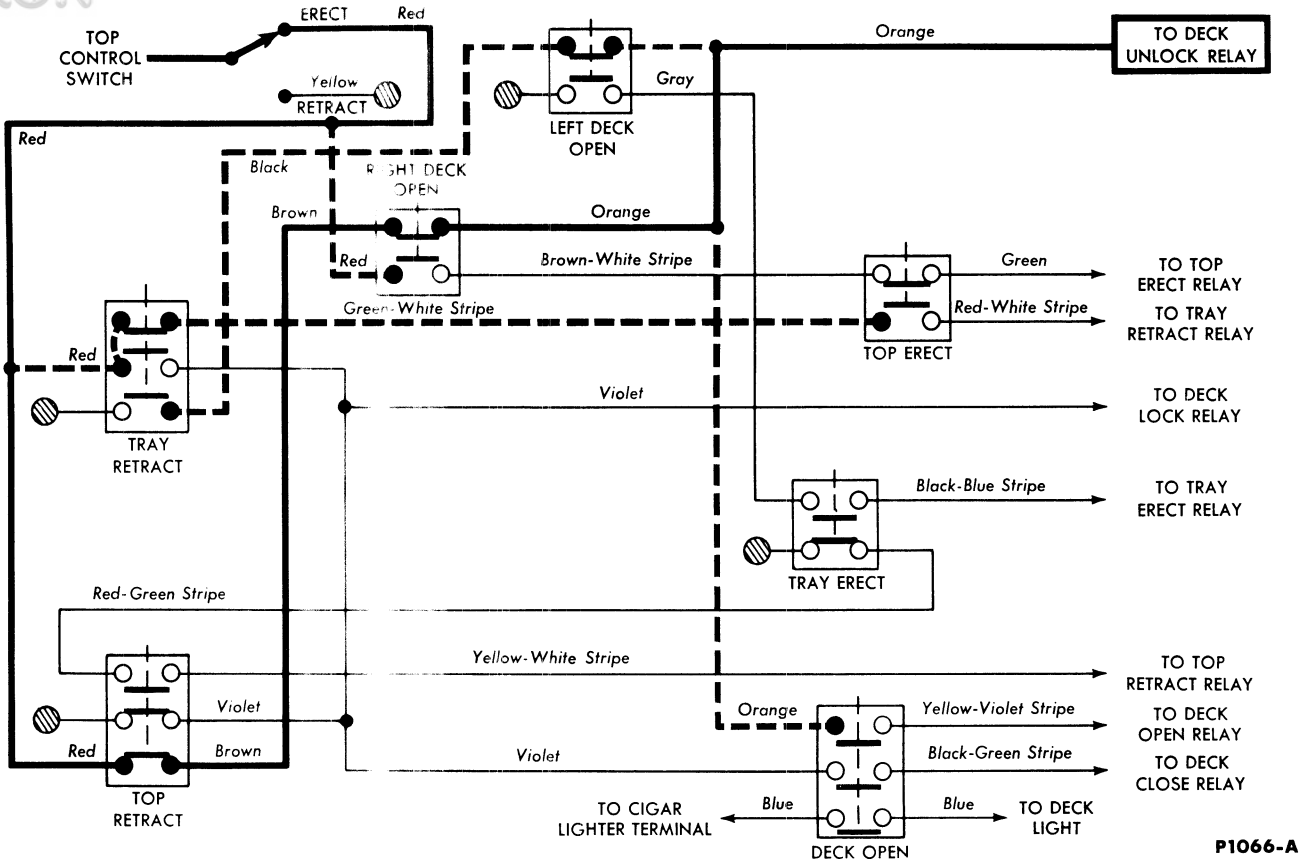

FIG. 12—Deck Lid Unlock—Top Erect Cycle

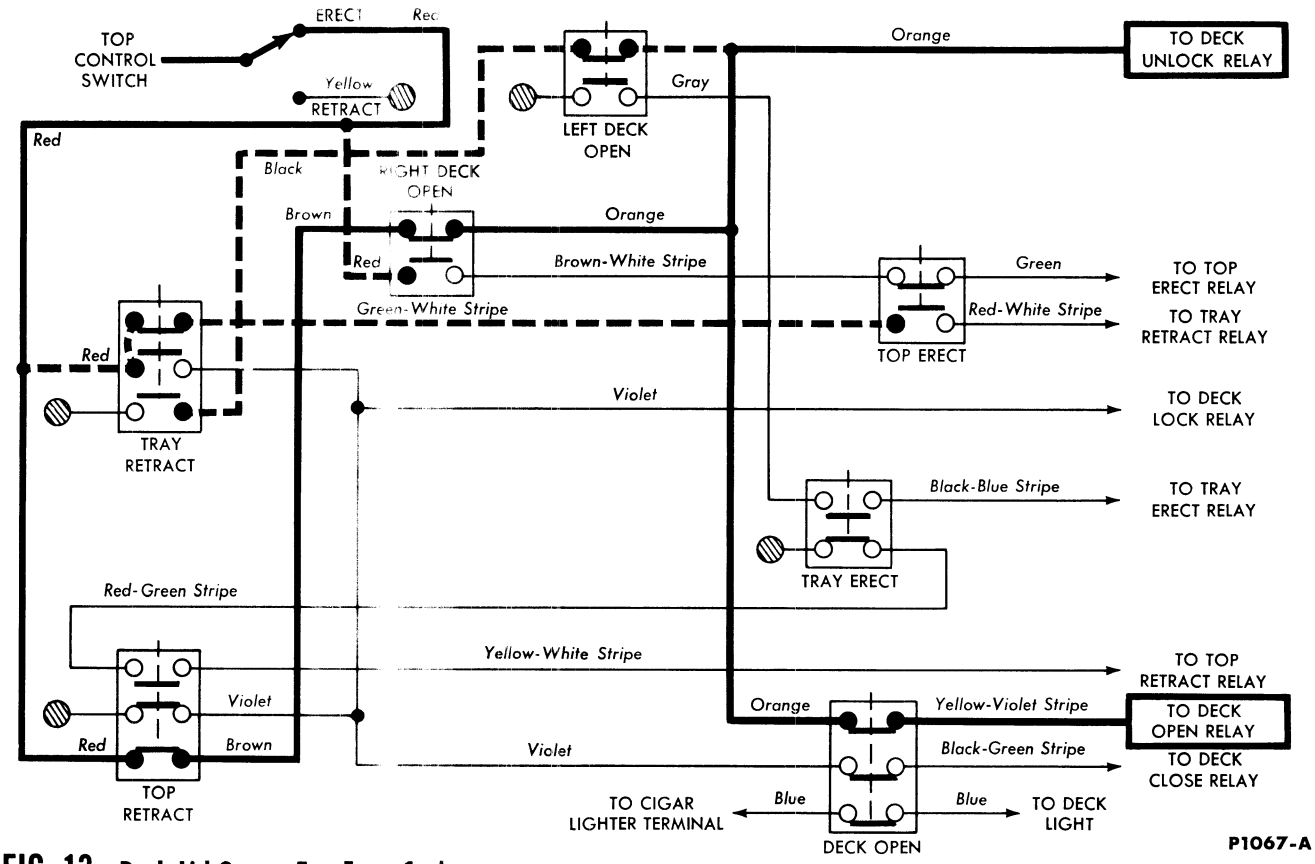

FIG. 13—Deck Lid Open—Top Erect Cycle

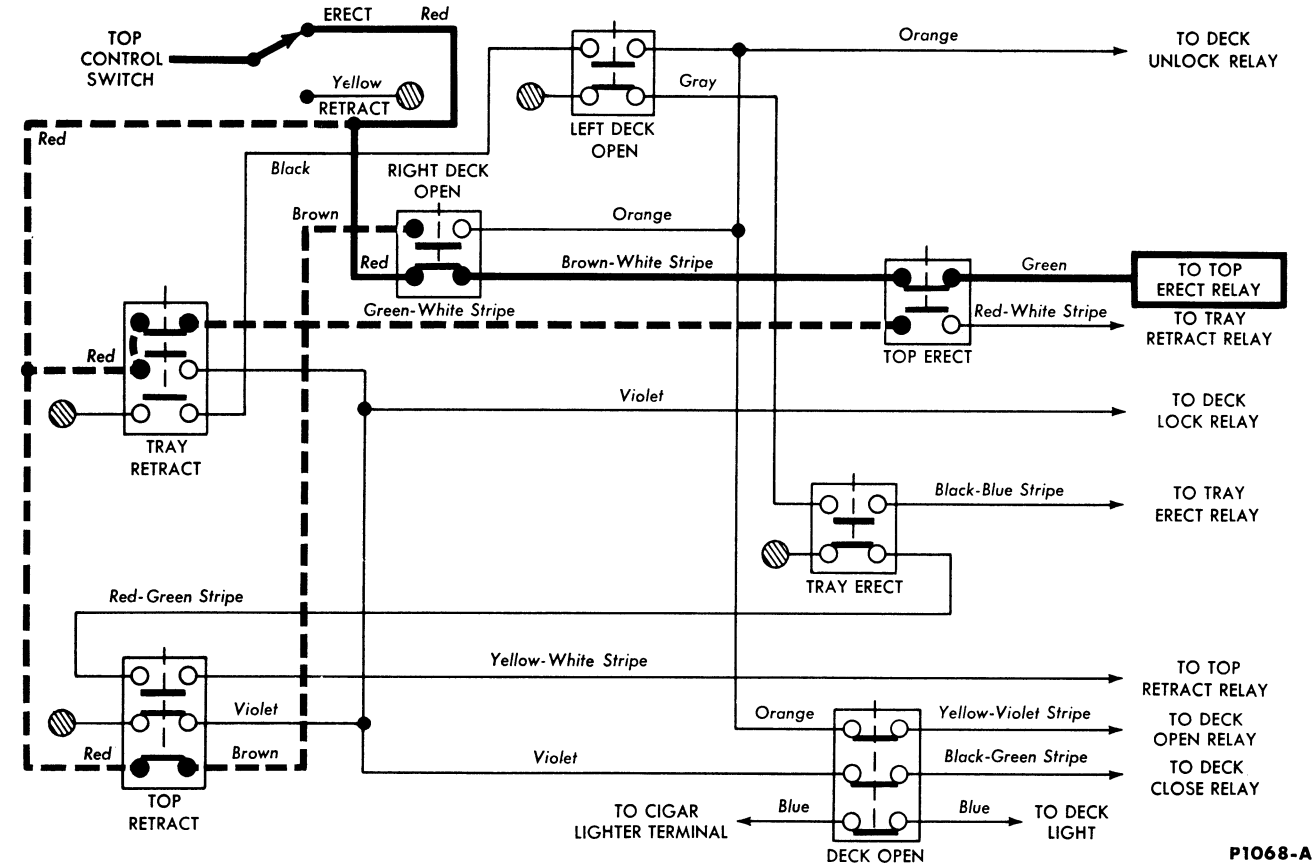

FIG. 14—Top Erect—Top Erect Cycle

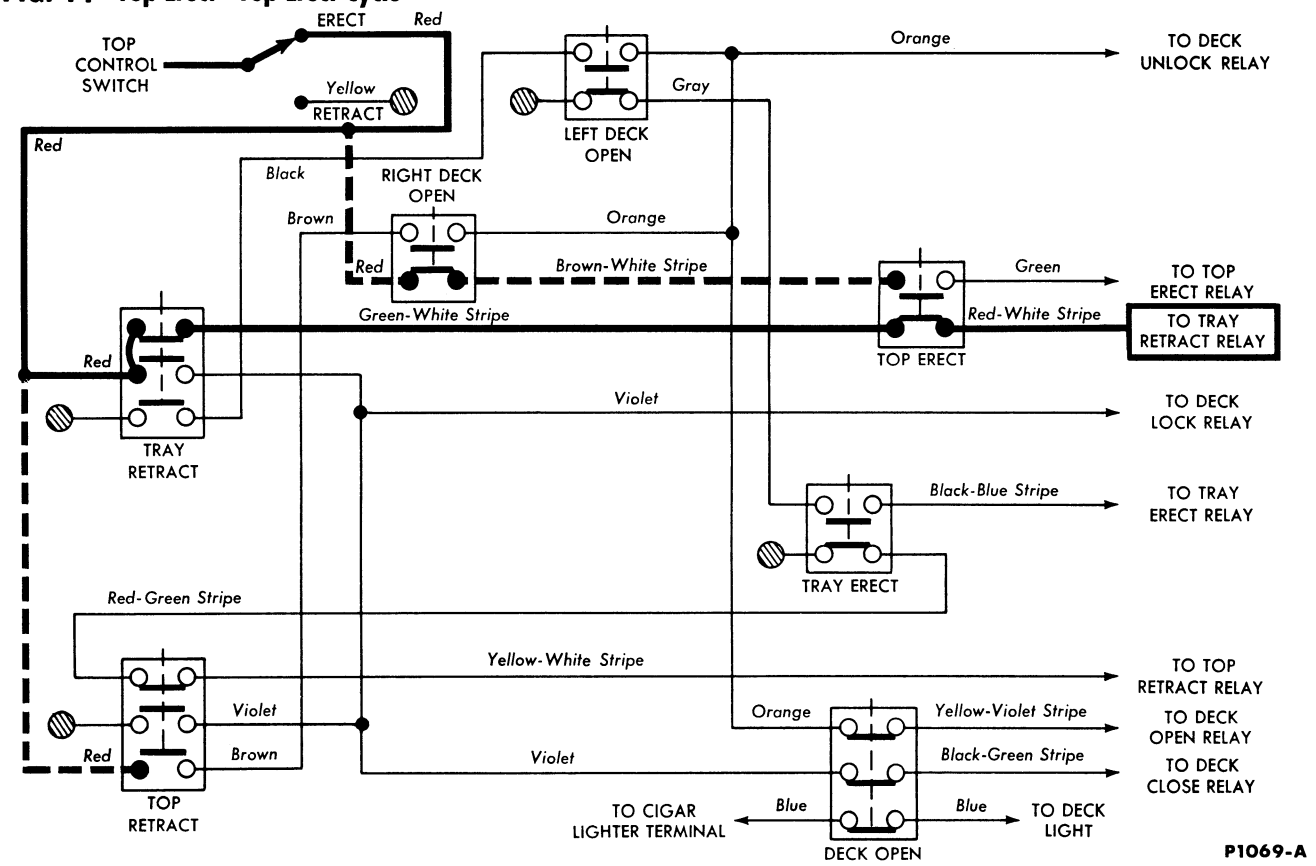

FIG. 15—Package Tray Fold—Top Erect Cycle

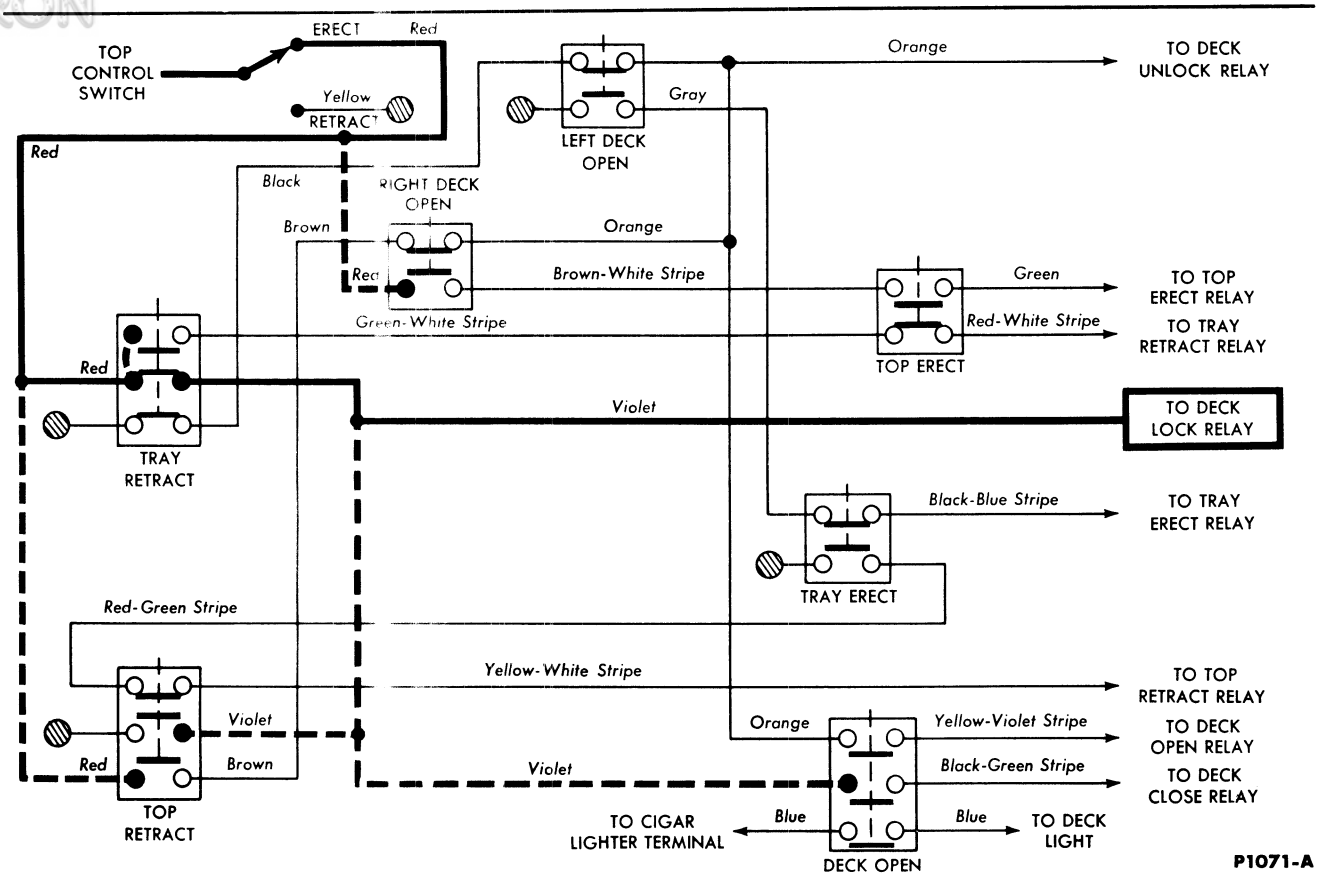

FIG. 16—Deck Lid Close—Top Erect Cycle

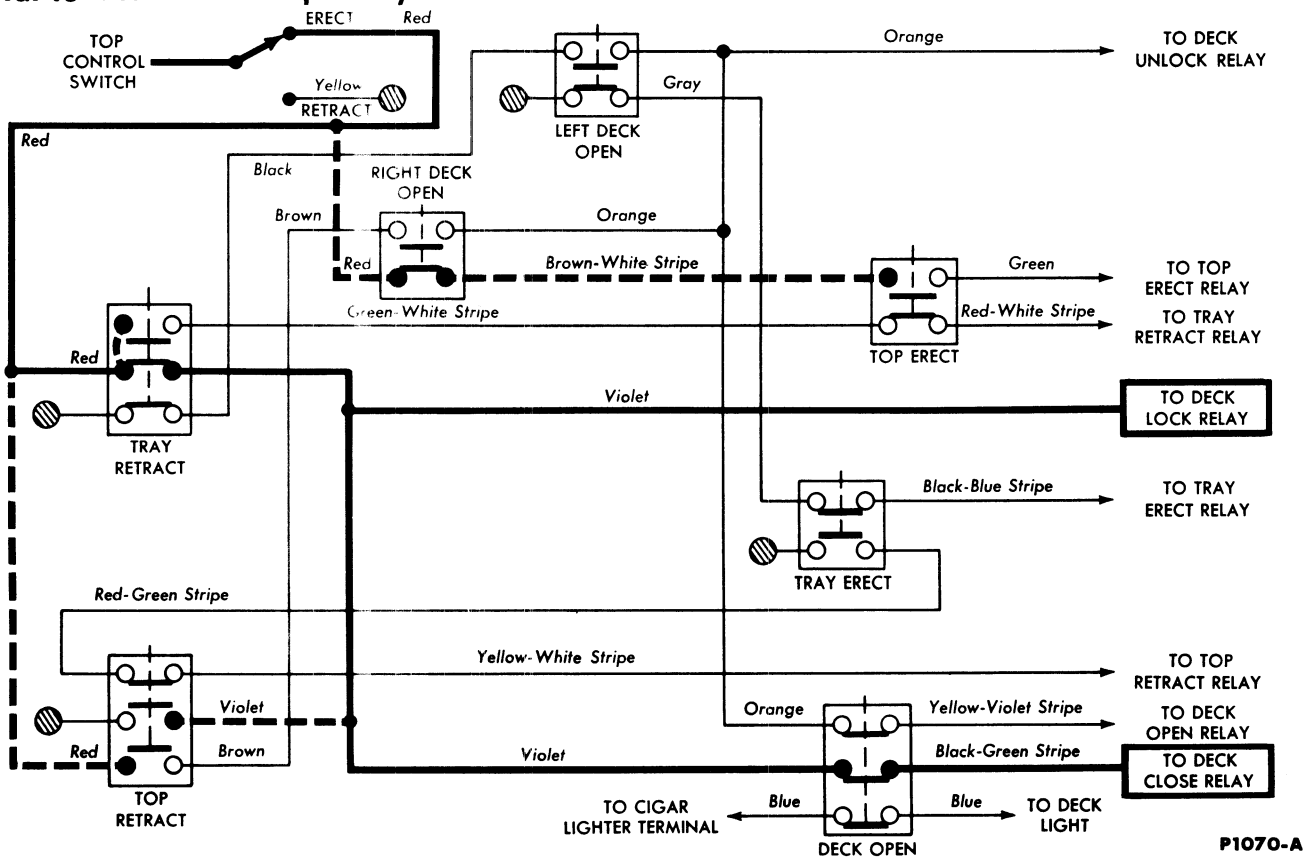

FIG. 17—Deck Lid Lock—Top Erect Cycle

raising the top. When the top reaches the fully erected position, it opens the top erect limit switch which de-energizes the top erect relay and stops the electric-hydraulic pump.

PACKAGE TRAY FOLD

When the top erect limit switch opens, another set of contacts in the same switch close (Fig. 15). Current then flows through the tray retract limit switch to the top erect limit switch and then to the tray retract power relay which actuates the tray motor. This motor folds the tray under the deck lid. When the tray is completely folded, the tray retract limit switch opens, and thus stops the tray motor.

DECK LID CLOSE AND LOCK

As the tray retract limit switch opens, another set of contacts in the same switch close (Fig. 16), allowing current to flow to the deck lock relay and through the deck lock limit switch to the deck close power relay. The electric-hydraulic pump and the deck solenoid valve are actuated. Hydraulic pressure is delivered to the 2 deck cylinders, lowering the deck lid. The deck lock motor locks the deck. As the deck lock screws draw the deck lid down, the deck lock limit switch is opened (Fig. 17), stopping the electric-hydraulic pump. Releasing the top control switch opens the circuit to the deck lock relay.

Fasten the rear window and lock the windshield header clamps.

2 DECK MANUAL OPENING PROCEDURES

If a part of the electrical, mechanical, or hydraulic system of the deck does not work, the following manual procedures may be used to get at the malfunctioning part.

MANUAL OPENING PROCEDURES

UNLOCKING DECK LID MANUALLY

1. Raise the car approximately 10 inches by placing a floor jack under the underbody rear cross member.

2. From the underside of each wheelbase, remove each deck lid lock retaining screw (Fig. 18).

3. After lifting the front edge of the deck lid about one inch, operate the top control switch to complete the opening of the deck lid.

OPENING DECK LID MANUALLY

1. Unlock the deck lid by operating the top control switch or by using the preceding method for manually unlocking the deck lid.

2. From underneath the lower back panel, remove the deck cylinder bracket retaining bolts from each cylinder (Fig. 19).

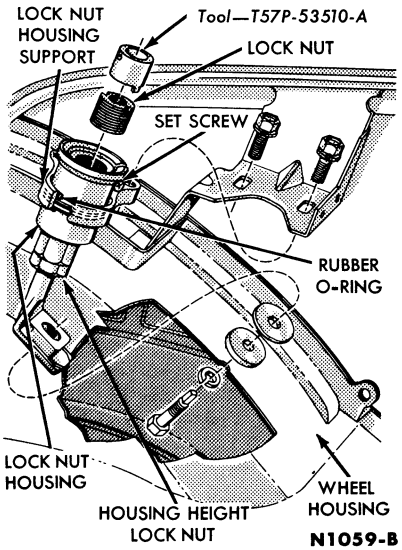

FIG. 18—Deck Lid Lock

3. Complete the opening of the deck lid manually. If the deck lid locks have been released from the wheel housings, the nut and housing portion of the locks will remain attached to the deck lid.

ERECTING TOP MANUALLY

If it becomes necessary to erect the top manually, proceed as follows:

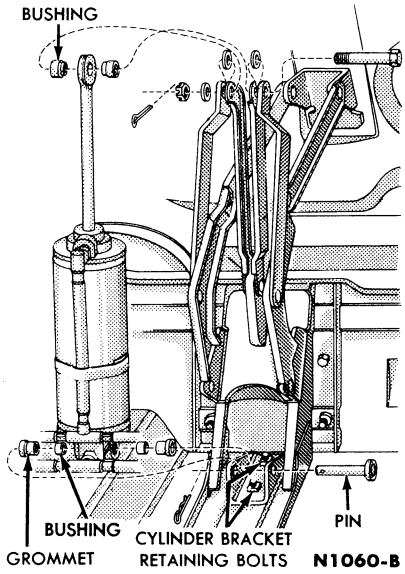

FIG. 19—Deck Lift Cylinder

1. Unlock and open the deck lid.

2. Energize both top solenoid valves, using suitable jumper wires and a 12-volt source. If either valve is inoperative, disconnect the hydraulic line(s) connected to the valve(s) so that there will be no hydraulic block in the top cylinders.

3. Manually erect the top.

3 ELECTRICAL CHECKS

Before attempting any trouble checks, read Section 1, "Top Operation." The following overall observations and checking procedures will assist in isolating the malfunctioning part.

SUPPLY CIRCUIT

A continuity light attached between ground and various points in the supply circuit will identify an inoperative or defective component (Fig. 5). With the ignition switch in the ON or ACC position and the transmission selector in N or P, checks at the circuit breakers, neutral switch relay, actuator switch and relay power bus bar (in that order)

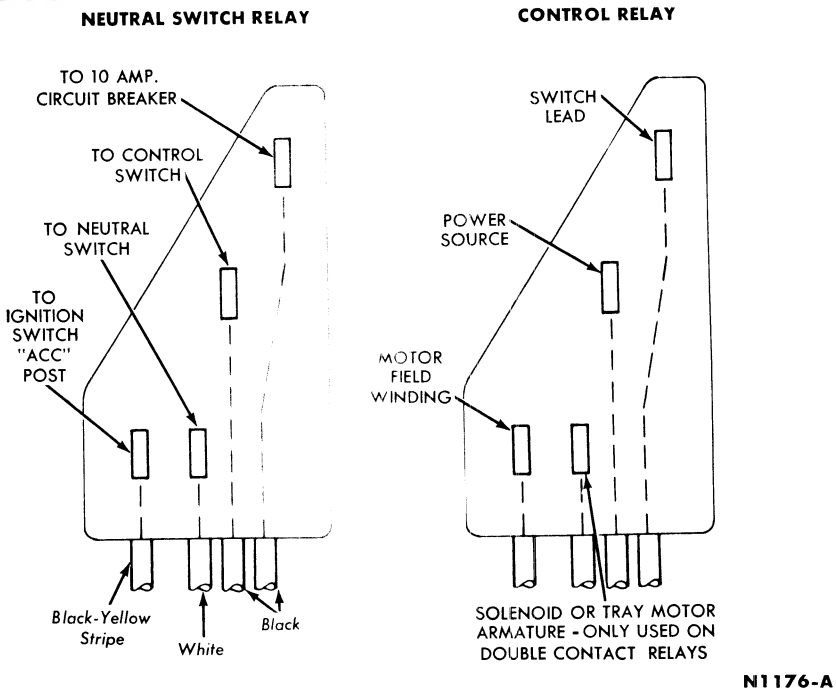

FIG. 20—Relay Wire Connector Identification

will isolate the problem. Fig. 20 will assist in identifying the neutral switch relay terminals.

SWITCH CIRCUITS

The switch circuits can be checked by by-passing the various components with a jumper wire. A continuity light cannot be used as the current draw required by the light will not allow the relay coils to energize. Figs. 3 thru 17 should be referred to for identification of the wires. Fig. 20 will identify the control relay terminals.

Connecting the jumper wire between the relay bus bar and the relay coil terminal will by-pass the switch circuit. If the motor or solenoid operates, the switch circuit can be checked to locate the inoperative or maladjusted switch, lose wire connector, or defective switch circuit wire. An audible "click" of the relay is another indication of switch circuit problems. If the component fails to operate and the relay is functional (the relay "clicks") the motor or solenoid circuits are at fault. Moving the jumper wire to the relay motor terminal will determine if the relay is at fault. Should the motor or solenoid still fail to function, the motor or solenoid should be checked.

When the deck lid is opened, all switches are accessible for a direct check of their function. A malfunction of the top can be caused by a defective or improperly adjusted switch. A check for this condition should be made before making further tests. A switch can be checked by depressing the switch stem, if improperly adjusted, or by-passing the switch with a jumper wire directly at the switch contact terminals or wire connectors.

MOTOR OR SOLENOID CIRCUITS

Application of a 12-volt power source with a jumper wire directly to the motor or solenoid, or by-passing the motor ground circuit breaker will isolate the cause of malfunction.

SWITCH ADJUSTMENT OR FUNCTION CHECKS

An ammeter (100-Amp. scale) inserted in the motor feed circuit will aid in determining which of the electrical components is operating (both normally and abnormally). The ammeter should be connected between the main feed 50-amp. circuit breaker on the starter relay and the motor supply lead (#8 gauge black wire) which supplies the control relay bus bars.

Should a switch be improperly adjusted and close the relay circuit for any functional cycle and yet not open the cycle just finishing, the ammeter reading will indicate the problem. Use Figs. 3 through 17 and Table 1 as a guide to the various components in use at each step of the top operation. The ammeter reading can be directly converted to a diagnosis of the problem.

TABLE 1—Electrical Component Current Draw

Pump Motor—Normal	32-48 amps.
—by-passing	58 amps.
Tray Motor—Normal	30-35 amps.
—no load	18-21 amps.
—stalled	100 amps.
Lock Motor—Normal	18-22 amps.
—no load	15-18 amps.
—stalled	50 amps.
Solenoids—each	10 amps.

4 MECHANICAL AND HYDRAULIC CHECKS

MECHANICAL CHECKS

Improper top operation can be caused by bent or misaligned linkage, binding linkage pins, and/or broken pivot bushings. Should the electrical and hydraulic systems be functionally correct and unsatisfactory operation of the top persists, check and adjust or replace the mechanical components as required.

HYDRAULIC CHECKS

Faulty hydraulic system operation can be caused by lack of fluid, leaks, air in the system, obstruction or kinks in the hoses, or faulty operation of a cylinder or the pump.

FLUID LEVEL CHECK

1. Erect the top.
2. Place absorbent cloths below the filler plug.
3. Remove the filler plug, and check the fluid level. It should be level with the bottom edge of the hole.
4. If the level is low, check the system for leaks, adding heavy duty brake fluid as necessary.

LIFT CYLINDER OPERATION CHECK

Operate the top control switch and observe the operation of the lift cylinders for the following:

If the movement of the piston rods is sluggish or uneven, check the hoses from the pump to the cylinders for kinks.

If one piston rod moves more slowly than the other, the cylinder with the slower rod is defective and should be replaced.

If both rods move slowly, or do not move at all, disassemble and repair the pump.

5 TROUBLE DIAGNOSIS GUIDE

The following trouble diagnosis guides, when used in conjunction with the checking procedures detailed in Sections 3 and 4, will assist in determining the possible cause of any malfunction of the top mechanism. The possible causes are listed in the order of their ease of checking to avoid unnecessary disassembly. The troubles listed for each subsequent part of the cycle are limited to those things which could occur only if the mechanism reaches the subject part of the cycle in a normal manner.

A battery which is not in a normal fully-charged condition can affect top operation. Be sure of an adequate power supply before making extensive tests of the top circuits.

TROUBLE DIAGNOSIS GUIDE

DECK UNLOCK	**NO UNLOCKING ACTION, NO NOISE** While holding the top control switch in the retract position, move the transmission control lever back and forth through the N position. If no audible click is heard from the neutral switch relay, the main 50-ampere circuit breaker, the switch 10-ampere circuit breaker, the neutral switch and the switch relay should be checked as detailed in Section 3. If the deck lock mechanism begins to function normally, the neutral switch should be checked. An audible noise from the neutral switch relay without any action from the deck lock mechanism indicates that the neutral switch is functional. **NO UNLOCKING ACTION, NO NOISE—NEUTRAL SWITCH FUNCTIONAL** With the neutral switch relay operating, move the top control switch to the opposite position to determine if the deck locks will ratchet. If deck locking occurs, check the following components by by-passing them with a jumper wire. A. **Retract Cycle.** Check the top control switch, tray retract limit switch, right deck open limit switch, and the deck unlock relay. B. **Erect Cycle.** Check the top control switch, top retract limit switch, left deck open limit switch, and the deck unlock relay. **NO UNLOCKING ACTION, CONTROL RELAY CLICKS** If a control relay functions, as determined by an audible click, the trouble may be in the tray retract limit switch, the deck lock motor, or motor ground circuit breaker. It will be necessary to manually unlock the deck lid, as detailed in Section 2, to gain access to the components. **NO UNLOCKING ACTION, LOCK MOTOR RUNNING** When the lock motor operates and does not unlock the deck lid, the cause may be broken flexible drive cables or loose lock nuts. Only one side may be inoperative. **NO UNLOCKING ACTION, DECK LID JUMPS OFF LOCKS** A maladjusted deck lock limit switch will allow the hydraulic pump to apply pressure to the lift cylinders and cause a bind in the lock screw operation. Adjustment of the switch should correct the trouble.

CONTINUED ON NEXT PAGE

TROUBLE DIAGNOSIS GUIDE (Continued)

DECK UNLOCK (Continued)	**DECK UNLOCKS, TOP MOVES—RETRACT CYCLE** Any movement of the top during deck unlocking indicates a malfunction of the tray erect limit switch.	**DECK UNLOCKS, TRAY BEGINS TO FOLD—ERECT CYCLE** Any folding action of the tray during deck unlocking indicates a malfunction of the top erect limit switch.
DECK LOCK	**SLOW LOCKING ACTION** A slow, binding action of the lock screws indicates that the deck lid lift pump is operating. Move the top control switch to open the deck lid	and observe the movement of the deck lid as it unlocks. Should the deck lid pop off the lock nuts, the deck lock limit switch adjustment should be checked.
DECK OPEN	**DECK UNLOCKS, BUT WILL NOT OPEN—DECK LIGHT OFF** The deck light contacts of the deck lock limit switch will be closed at the same time as the contacts which control the deck open relay. Lifting up on the deck lid at the deck lock limit switch should allow the switch to move and open the deck lid. If the deck lid does not start to open, the switch may be at fault and by-passing the switch at the deck open relay will verify this condition. **DECK UNLOCKS, BUT WILL NOT OPEN—DECK LIGHT ON** If the deck light is on, the deck lock limit switch should be making contact to close the deck open relay circuit. By-passing the switch at the	relay will check the switch. Should the deck still be inoperative, by-pass the relay to check its performance. It will be necessary to manually open the deck lid, as detailed in Section 2, to test the motor and deck solenoid. **DECK OPENS, ACTION NOT SMOOTH** A jumpy or slow deck lid motion indicates trouble in the hydraulic system. Check the fluid level in the pump assembly. A low fluid level is an indication of possible leaks which should be corrected before replacing the fluid. Troubles in the deck lift cylinders will also be indicated by a jumpy motion of the deck lid.
DECK CLOSE	**DECK WILL NOT CLOSE—LOCK SCREWS NOT RUNNING** Check the limit switch adjustment (top retract limit switch on retract cycle or tray retract limit switch on erect cycle) by depressing the switch by hand. If adjustment does not correct the trouble, check the switch contacts with a jumper wire.	**DECK WILL NOT CLOSE—LOCK SCREWS RUNNING** Check the deck close relay and the deck lock limit switch for malfunction with a jumper wire. **DECK CLOSES—LOCK SCREWS NOT RUNNING** Check the deck lock relay, deck lock motor, and lock motor circuit breaker.
TRAY ERECT	**TRAY WILL NOT ERECT—DECK LOCK SCREWS RUNNING** If the deck lift mechanism does not depress the right deck open limit switch, the deck lock screws and pump motor will still operate. If the correct action can be initiated by depressing the right deck open limit switch plunger, adjust the switch. **TRAY WILL NOT ERECT—DECK LOCK SCREWS STOPPED** If all action stops when the deck lid reaches the completely open position, the trouble may be in the right deck open limit switch, tray erect	limit switch, tray motor, or the tray motor ground circuit breaker. The switches can be by-passed by touching the proper terminals with a jumper wire (see the individual circuit diagrams in Section 1). Further testing of the tray erect relay, tray motor and motor ground circuit breaker can then be performed. **TRAY ERECTS—DECK LOCK SCREWS CONTINUE RUNNING** Adjust the right deck open limit switch to properly open the deck open relay terminals of the switch and stop the deck screws and pump motor.

CONTINUED ON NEXT PAGE

TROUBLE DIAGNOSIS GUIDE (Continued)

TRAY RETRACT	**TRAY WILL NOT RETRACT** Check the adjustment of the top erect limit switch by depressing the switch plunger by hand. If the tray still does not move, check the top erect limit switch, tray retract limit switch, tray motor, and motor ground circuit breaker.	**TRAY STOPS DURING RETRACTION** An incorrectly adjusted top erect limit switch will allow the hydraulic-pump and solenoids to be energized during tray movement. This condition will overload the total circuit and open the main 50-ampere circuit breaker.
TOP MOVEMENT	**TOP WILL NOT RETRACT** **Pump Motor Not Running.** When the top will not retract after the tray has extended, check the tray erect limit switch, top retract limit switch, top retract relay, and the pump motor. The tray erect limit switch may be maladjusted, and depressing the switch plunger should start the normal top operation. The tray motor, if stalled at the limit of tray travel, may have opened the main 50-ampere circuit breaker. Further check of the tray erect limit switch and the top retract limit switch can be made at the switch terminals or connectors. The top retract relay can be checked by by-passing it with a jumper wire. **Pump Motor Running.** A running pump motor indicates that the switch and relay circuits are functional. A check of the top solenoids should be made. Connecting the solenoid feed wire momentarily should produce an audible noise as the valve opens and closes. **TOP STOPS DURING RETRACTING** A stalled tray motor can open the motor supply 50-ampere circuit breaker and stop the top movement. Check the tray erect limit switch to make certain that the tray motor stops at the end of the tray travel.	**TOP WILL NOT ERECT** **Pump Motor Not Running.** Check the left deck open limit switch, top erect limit switch, top erect relay, and the pump motor. The left deck open limit switch may be maladjusted and depressing the switch plunger by hand should start the normal top operation. The checking of the other components can be made by by-passing each one with a jumper wire. **Pump Motor Running.** Check the top solenoid valves to determine if the valves are opening as required. Connecting the solenoid feed wire momentarily should produce an audible noise as the valve opens and closes. **TOP MOVEMENT NOT SMOOTH** If the top movement is not smooth, check the solenoid valves and top lift cylinders for malfunction. Also check for mechanical problems as detailed in Section 4.

6 ASSEMBLY REPLACEMENTS

MOTOR AND PUMP

A pump repair kit and a reservoir repair kit are available for service.

REMOVAL

1. Open the deck lid and remove the luggage compartment right side trim panel. **See Section 2 for procedures to gain access to the pump motor if the deck lid is inoperative.**

2. Disconnect the motor leads at the wire connector (Fig. 21).

3. Using a jumper wire from the relay feed bar (a 12-volt power source) energize both top solenoids to relieve the hydraulic pressure in the lines.

4. After placing cloths under the hose connections, disconnect both hoses at the pump and then plug the open fittings and lines.

5. Remove the pump assembly attaching nuts and remove the assembly. Do not lose the rubber grommets.

DISASSEMBLY

1. Remove the filler plug, and drain the fluid from the reservoir into a clean container.

2. Scribe lines on the reservoir, pump body, and reservoir cover so that these parts can be assembled properly (Fig. 22).

3. Remove the center bolt from the reservoir cover (Fig. 23).

4. Remove the cover and reservoir, and the two O-ring seals at each end of the reservoir.

5. Remove the mounting bolts that hold the valve body on the pump body.

6. Place a cloth under the assembly, and carefully remove the valve body so that the check balls are not lost.

7. Remove both rotors and the drive ball (Fig. 23).

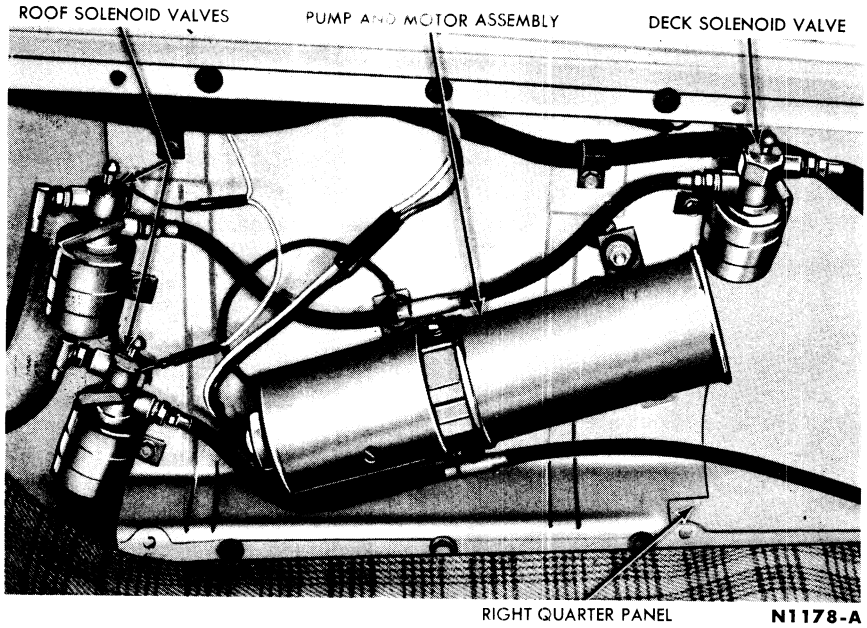

FIG. 21—Pump Assembly and Solenoid Valves

ASSEMBLY

When assembling the pump, use all the parts supplied in the pump repair kit.

1. Install the drive ball and the inner rotor on the armature shaft.

2. Install the outer rotor, and place the check balls in the pump body channels.

3. Install the valve body on the pump body.

4. Install an O-ring seal in each end of the reservoir.

5. Install a new seal on the center bolt, and install the reservoir and cover on the valve body, using the lines previously scribed as guides (Fig. 22). The cover must be mounted with the embossed lines in a vertical and horizontal position and the filler plug at 10 o'clock position.

6. After positioning the assembly horizontally, fill the reservoir with heavy duty brake fluid to the level of the bottom of the filler plug hole. Install the filler plug with a new seal.

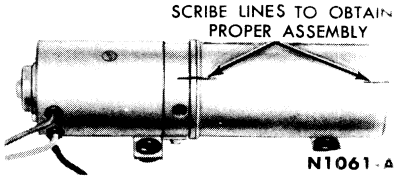

FIG. 22—Reservoir Marked Before Disassembly

INSTALLATION

1. Position the pump mounting grommets to the pump, and install the pump assembly mounting nuts. Be sure the motor ground lead is installed under the grommet to a good electrical ground.

2. Remove the plugs from the lines and fittings and connect both lines to the pump assembly.

3. Connect the motor leads at the connector.

4. Bleed the system by operating the top 2 or 3 times, and check the fluid level. **The top must be in the raised position when the fluid level is checked.**

TOP LIFT CYLINDER

REMOVAL

1. Remove the rear seat cushion and back.

2. Disconnect and plug the hydraulic lines at both ends of the cylinder, using cloths to catch any leaking fluid.

3. After removing the hairpin clip and clevis pin at each end of the cylinder, remove the cylinder.

INSTALLATION

1. Position the cylinder in the car.

2. Install the clevis pins and hairpin clips at each end of the cylinder.

3. Connect the hydraulic lines.

4. Bleed the system by cycling the top 2 or 3 times, and check the fluid level. Add fluid, if required.

5. Install the rear seat back and the cushion.

DECK LID LIFT CYLINDER

REMOVAL

1. Remove the lift cylinder guard from the floor.

2. Remove the upper and lower clevis pins.

3. Remove the cylinder from the mounting, then place the cylinder into a suitable pan. Disconnect both hydraulic lines at the cylinder. Note the routing of each line, to assure correct installation.

INSTALLATION

1. Connect the hydraulic lines.

2. Position the cylinder on the mounting and install the clevis pins.

3. Bleed the hydraulic system by cycling the top 2 or 3 times, then check and add fluid, if required.

4. Replace the cylinder guard.

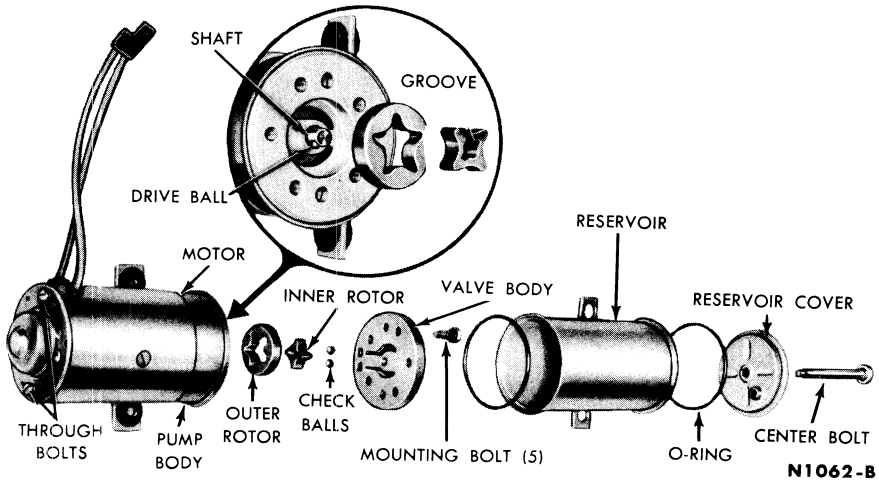

FIG. 23—Motor and Pump Disassembled

7 MAINTENANCE AND ADJUSTMENTS

MAINTENANCE

The top should be washed regularly with soap and water. If stubborn stains or spots can't be removed with soap and water, or with FoMoCo Interior Trim Cleaner, an abrasive-type cleaner can be used sparingly. **The seams should not be scrubbed with an abrasive cleaner.** After washing, the top should be rinsed thoroughly with clean water. The rear window should be washed with warm water and mild soap powder. The top should be allowed to dry while it is in the raised position with the header clamps fastened.

To keep the rear window slide fastener operating freely, apply a light coating of Stick Wax, preferably right after each washing.

ADJUSTMENTS

If the top is misaligned, corrections should not be made until after a check has been made for bent linkage. All pivot points in the top linkage should be lubricated periodically with light engine oil.

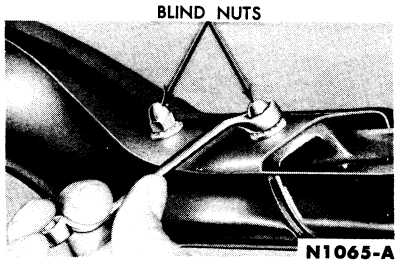

FIG. 24—Header Bow Adjustment

Before aligning the top, visually determine if the trouble results from top misalignment and/or window misalignment. It may be necessary to align both the top and the windows because of the relationship between the two. **Adjustments of the door and quarter windows must be checked and any necessary changes made before making top adjustments. These windows must be fully closed to insure proper adjustment.** Door and quarter window adjustments are outlined in Part 11-3.

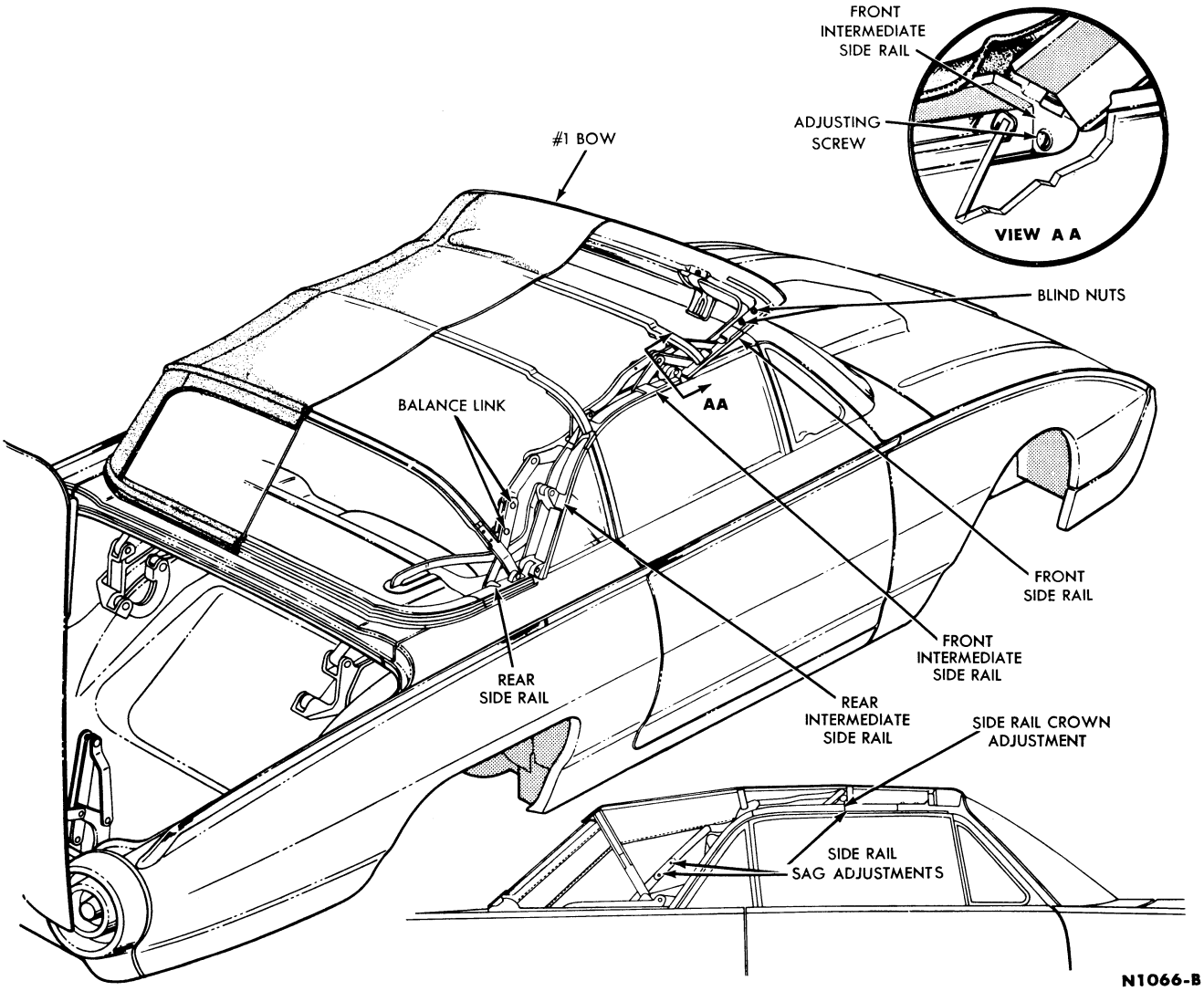

FIG. 25—Top Linkage

There are 4 main adjustment areas for the top and the luggage compartment door: the header area, the rear rail area, the main pivot bracket area, and the luggage compartment door area.

HEADER AREA ADJUSTMENTS

Header Bow Adjustment. The header bow can be adjusted fore and aft to provide alignment with the header.

1. With a pencil, mark the present location of the joint between the header bow and the side rail. This mark provides a measuring point for adjustment.

2. Raise the top to a satisfactory working level, prop it in position, and remove the screws that hold the front part of the side rail forward weather strip to the side rail and the header bow. It is not necessary to remove the entire weatherstrip.

3. Using a putty knife loosen the front part of the weatherstrip from the side rail and the header.

4. Loosen the blind nuts (Fig. 24) move the bow fore or aft to get proper alignment at the header, and tighten the nuts.

5. Loosen the dowels, and lower the top to check adjustment.

6. After making sure the dowels are aligned with their striker plates tighten the dowels in position.

Dowel Adjustment. The header bow dowels must be aligned with their striker plates in the header bow. After making any top adjustment check the dowel alignment, and adjust if necessary. After removing the header bow weatherstrip, the dowels can be moved laterally by merely loosening the screws.

Toggle Clamp Adjustment. The toggle clamps that hold the header bow against the header can be adjusted to provide a good seal.

1. To determine which side is not sealing, check the weatherstrip between the header bow and the header. Both toggle clamps need not be adjusted unless necessary.

2. Release the toggle clamps, and thread the toggle hook in or out until adequate sealing pressure is applied at the header weatherstrip.

REAR RAIL AREA ADJUSTMENTS

Side Rail Sag. If the side rail sags above the door glass, adjust as follows, using the top of the door glass and the bottom of the side rail as points for measurement.

1. Release the toggle clamps.

2. Adjust each front intermediate side rail set screw flush with the end of the rail (Fig. 25).

3. Loosen the balance link adjustment bolts (Fig. 25) at each side of the car.

4. Lengthen or shorten the balance link (Fig. 25) to obtain a parallel condition between the front side rail, the front intermediate side rail, and the top of the door window frame.

5. Tighten the balance link adjustment bolts. **To eliminate a crowning condition, adjust the front intermediate side rail set screw (Fig. 25).**

Top Stack Adjustment

1. Stack the top.

2. If the top stack needs vertical adjustment for clearance, loosen the balance link adjustment bolts shown in Fig. 25.

3. Move the balance link to get suitable stack height, and tighten the bolts.

4. Raise the top slowly, checking for fore and aft clearance at the rear of the linkage, and fasten the clamps.

5. Check, and if necessary, adjust side rail sag.

Quarter Window Clearance. Loosen the bolts marked "A" in Fig. 26, and adjust the serrations to get a snug fit between the rear quarter window and the intermediate side rail. After making this adjustment, check the top sag and the top stack adjustments.

MAIN PIVOT BRACKET AREA ADJUSTMENTS

The main pivot bracket and its support provide for shifting the entire top assembly fore and aft, vertically, and laterally. **Because movement of the main pivot bracket will disturb several other adjustments, move this bracket only after other adjustments have failed to solve a specific problem.**

Fore And Aft Adjustment. This adjustment moves the top forward or rearward for a fit between the rear edge of the package tray and the body opening. This adjustment may also be necessary for proper mating of the header dowels and their strikers.

1. Loosen the main pivot support bracket retaining bolts (Fig. 26).

2. Move the top fore or aft to get a fit between the body and the rear edge of the package tray or to mate the header dowels and their strikers.

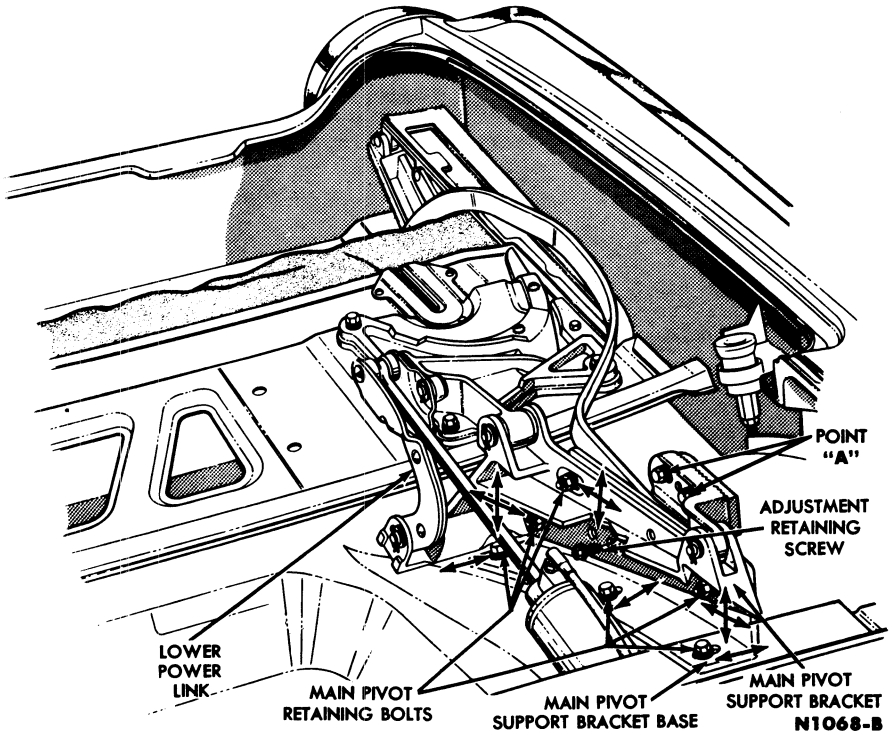

FIG. 26—Main Pivot Support Bracket

3. Tighten the bolts, and check other adjustments.

Vertical Adjustment. This adjustment moves the top for a fit between the rear edge of the package tray and the body opening.

1. Loosen the main pivot support bracket retaining bolts (Fig. 26).

2. Move the top up or down until the rear edge of the package tray is level with the body opening. There must be clearance for window movement.

3. Tighten the bolts, and check other adjustments.

Lateral Adjustment. To obtain a centered fit between the side rail weatherstrips and the top edges of the door glasses and the quarter windows, the top may be moved sideways as follows:

1. At both main pivot brackets loosen the adjustment bolts retaining the main pivot support bracket to the floor pan (Fig. 26).

2. Move the top to either side to get a centered fit at the side rail weatherstrips.

3. Tighten the bolts, and check other adjustments.

The side rail weatherstrip can also be adjusted after loosening the weatherstrip retaining nuts.

DECK LID AREA ADJUSTMENTS

Fore-And-Aft Adjustment Of The Finish Panel. Adjust the space between the edges of the finish panel and the deck lid and/or the body as follows:

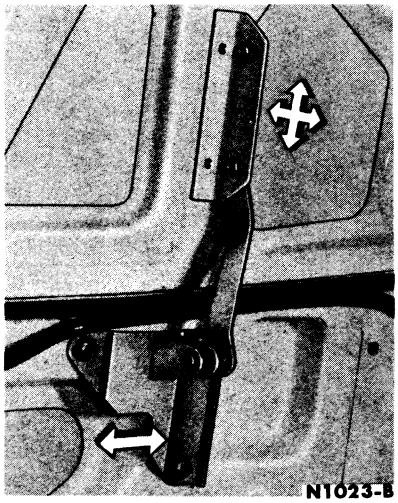

FIG. 27—Deck Lid Finish Panel Adjustments

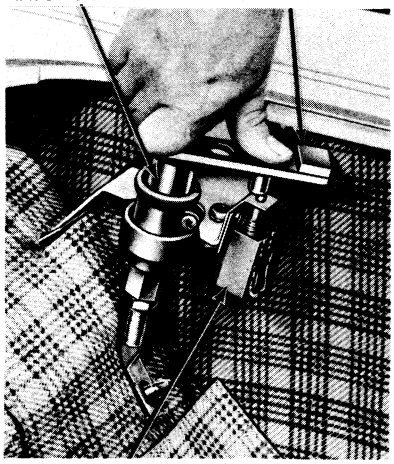

FIG. 28—Deck Lock Switch Adjustment

1. Slightly loosen the screws that attach the finish panel hinge to the deck lid (Fig. 27).

2. Shift the finish panel so that there is equal space between the edges of the finish panel and the deck lid.

3. Tighten the retaining screws securely.

Up-And-Down Adjustment Of The Finish Panel

1. Slightly loosen the hinge arm retaining bolts at the finish panel (Fig. 27).

2. Raise or lower the finish panel until the finish panel is flush with the surface of the deck lid. Make certain that the weatherstrip seal is not disturbed.

3. Tighten the retaining bolts securely.

Lateral Or Fore-And-Aft Deck Lid Adjustment

1. Slightly loosen the hinge retaining bolts at the deck lid.

2. Shift the deck lid either laterally,.fore, or aft in the enlarged holes, until there is equal clearance along the sides and rear edges of the deck lid.

3. Tighten the hinge bolts securely.

SWITCH ADJUSTMENTS

The locations of the various limit switches are shown in Fig. 2.

Top Retract Limit Switch

1. Adjust the top retract limit switch to the midpoint of the adjustment slots.

2. Lower the top to the full down position.

3. Readjust the top retract limit switch as necessary. A slight adjustment of the switch will either delay or advance the deck lid close operation.

Deck Lock Switch Adjustment

1. Use tool T61B-15780-A (Fig. 28).

2. Pull apart the switch quick disconnect and attach a continuity test light to the wires that go to the bottom set of contact terminals.

3. Press the tool firmly into the lock nut. Adjust the switch upward until the test light attached to the bottom set of contacts just goes on. Tighten the switch mounting screws and remove the tool.

Deck Lock Switch Actuator Adjustment

1. Use tool T61B-15780-A (Fig. 29).

2. Position the tool over the lock screw (Fig. 29). Press the tool firmly against the lock screw shoulder.

3. Pivot the tool to line up with the switch actuator. Bend the actuator until it just touches the raised portion of the tool.

4. If the operation of the deck lid discloses that the deck lid pops up when opening, the switch actuator may be bent very slightly away from the deck lid.

Top Erect Limit Switch

1. Raise the top to the full up position.

2. Place a 0.060 inch shim between the end of the switch shaft and the actuator.

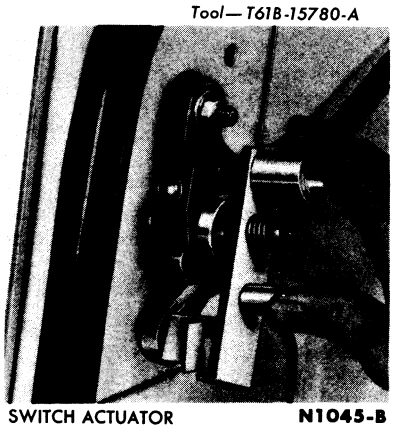

FIG. 29—Deck Lock Actuator Adjustment

3. Adjust the switch actuator until the switch is firmly to the end of its travel against the shim. Tighten the switch actuator mounting screws, and remove the shim.

Tray Erect Limit Switch

1. Extend the package tray on the deck lid to the end of its travel.

2. Place a 0.060 inch shim between the end of the switch shaft and the switch actuator on the tray support arm.

3. Adjust the switch actuator until the switch is firmly to the end of its travel against the shim. Tighten the switch actuator mounting screws, and remove the shim.

Tray Retract Limit Switch

1. Retract the package tray on the deck lid to the end of its design travel.

2. Place a 0.100 inch shim between the end of the switch shaft and the switch actuator on the tray support arm.

3. Adjust the switch actuator until the switch is firmly to the end of its travel against the shim. Tighten the switch actuator mounting screws, and remove the shim.

Deck Open Limit Switches

Both right and left deck open switches are adjusted as follows:

1. Raise the deck lid to the full open position.

2. Place a 0.060 inch shim between the end of the switch shaft and the actuator.

3. Adjust the actuator so that the switch shaft is fully depressed. Tighten the actuator mounting screws and remove the shim.

DECK LOCK ADJUSTMENT

For an adequate seal, the deck lock screw assembly must be adjusted to engage properly with the lock nut assembly.

Deck Lock Screw Assembly. Loosen the 2 nuts retaining the lock screw assembly to the deck lid and adjust the assembly fore or aft to align with the lock nut assembly.

Deck Lock Nut Housing Support. Loosen the 2 screws retaining the lock nut housing support to the quarter panel and adjust the support side to side to align with the lock screw (Fig. 18).

Deck Lock Nut Set Screw. Loosen the set screw retaining the lock nut in the housing assembly and turn the lock nut in or out to the required position. Turn the lock nut, using tool T57P-53510-A, so that the lock screw will ratchet and the deck lid weatherstrip is compressed.

Do not attempt any trial locking of the deck unless the set screw is properly tightened.

Deck Lock Nut Housing Height. The foot of the lock nut housing assembly may be adjusted up or down from the wheelhouse to insure the correct positioning of the O-ring. The O-ring should be centrally located in the housing support (Fig. 18).

PART 11-5 SPECIFICATIONS

GENERAL DIMENSIONS

Wheelbase	113 inches
Tread—Front Rear	61 inches 60 inches
Over-all Length	205 inches
Over-all Width	75.9 inches
Over-all Height (with Design Load)—Hardtop Convertible	52.5 inches 53.3 inches

CIRCUIT BREAKER CHART

Circuit	Protective Device	Location
Convertible Top Control		
Relay Feed	50-amp. Circuit Breaker	On Starter Relay
Switch Feed	10-amp. Circuit Breaker	Next to Starter Relay
Package Tray Motor	15-amp. Circuit Breaker	On Deck Lid
Deck Lock Motor	15-amp. Circuit Breaker	On Deck Lid
Power Seat	30-amp. Circuit Breaker	On Starter Relay
Power Window Main	30-amp. Circuit Breaker	On Starter Relay
Door Window	15-amp. Circuit Breaker	Under Instrument Panel
Quarter Window	15-amp. Circuit Breaker	Floor Panel Under Seat

TOP MAXIMUM AMPERAGE DRAW

Operation	Amperes*
Top Retract Cycle	
Deck Lid Unlock	20
Deck Lid Open	63
Package Tray Extend	30
Top Retract	65
Deck Lid Close	60
Deck Lid Lock	22
Top Erect Cycle	
Deck Lid Unlock	20
Deck Lid Open	63

TOP MAXIMUM AMPERAGE DRAW (Cont'd)

Operation	Amperes*
Top Erect	65
Package Tray Fold	20
Deck Lid Close	60
Deck Lid Lock	22

*While making amperage draw tests, a battery reading of 11.5-12.5 volts must be maintained. Momentary peak currents above specifications are not significant.

ELECTRICAL COMPONENT CURRENT DRAW

Component	Amperes†
Pump Motor—Normal —By-passing	32-48 58
Tray Motor —Normal —No Load —Stalled	30-35 18-21 100
Lock Motor —Normal —No Load —Stalled	18-22 15-18 50
Solenoids —Each	10

†100-amp. scale ammeter connected between 50-amp. circuit breaker and relay feed wire.

POWER SEAT CURRENT DRAW

At No Load	9-11 Amperes at 12 volts
Seat Operating (Empty)	18-22 Amperes
Stalled	30-50 Amperes

POWER WINDOW CURRENT DRAW

At No Load	8-10 Amperes at 12 volts
Operating Window	20 Amperes (Max.) at 12 volts
Stalled	30-50 Amperes at 12 volts

1962 FORD THUNDERBIRD SHOP MANUAL

GROUP 12

MAINTENANCE, LUBRICATION, AND SPECIAL TOOLS

		PAGE
PART 12-1	MAINTENANCE SCHEDULE	12-2
PART 12-2	MAINTENANCE OPERATIONS	12-8
PART 12-3	TOOLS	12-10

PART 12-1 MAINTENANCE SCHEDULE

MAINTENANCE SCHEDULE

Interval	Operation	Lubricant
ANNUALLY	Check Convertible Top Pump Reservoir Fluid Level, and Add Fluid as Required	Castor Oil Base Hydraulic Fluid
	Replace Windshield Wiper Blades	
	Check Air Conditioner State of Refrigerant Charge, and Add Refrigerant as Required	
AS REQUIRED	Service or Replace Spark Plugs	
	Service or Replace Distributor Breaker Points	
	Lubricate Distributor Wick and Bushing	
	Lubricate Distributor Cam	Distributor Cam Grease

Odometer Reading (Miles)	Operation	Lubricant
6000	Change Engine Oil and Replace Oil Filter	Certified Sequence — Tested Engine Oil— SAE 30 or 10W-30 for prevailing temperatures above 90°F SAE 20, 20W, or 10W-30 between 20°F and 90°F SAE 10W or 10W-30 between −10°F and 20°F SAE 5W or 5W-20 for prevailing temperatures below −10°F Certified sequence—tested engine oils are described on their containers by such phrases as: meets, excels, exceeds, or has proven superior in the test requirements, test sequences, MS Service tests, standards, and service requirements of automotive manufacturers, automakers, car makers, or car manufacturers for MS Service or Service MS.
	Check Cruise-O-Matic Transmission Fluid Level, and Add Fluid as Required	Ford Automatic Transmission Fluid C1AZ-19582-A. Equivalent substitute automatic transmission fluids must conform to Ford Specification M-2C33-C.
	Check Power Steering Pump Reservoir Fluid Level, and Add Fluid as Required	Ford Automatic Transmission Fluid C1AZ-19582-A, or Automatic Transmission Fluid Type A, Suffix A.

CONTINUED ON NEXT PAGE

MAINTENANCE SCHEDULE (Continued)

Odometer Reading (Miles)	Operation	Lubricant
6000 (continued)	Check Brake Master Cylinder Fluid Level, and Add Fluid as Required	Ford Heavy-Duty Brake Fluid 1A-19542-B.
	Check Rear Axle Lubricant Level, and Add Lubricant as Required	Ford Hypoid Gear Lubricant. Equivalent substitute rear axle lubricants must conform to Ford Specification M-2C50-B.
	Clean Carburetor Air Cleaner Filter Element	
	Clean Crankcase Breather Cap and Filter	
	Clean Positive Crankcase Ventilation Emission Valve	
	Clean Body and Door Drain Holes	
	Cross-Switch Wheels and Tires	
	Lubricate Front Suspension Ball Joints	Chassis Lubricant
	Lubricate Steering Linkage	Chassis Lubricant
	Lubricate Drive Shaft Universal Joints	Ford Universal Joint Grease. Equivalent Substitute Universal Joint Greases must conform to Ford Specification M-1C27
12,000	Change Engine Oil and Replace Oil Filter	Certified Sequence — Tested Engine Oil— SAE 30 or 10W-30 for prevailing temperatures above 90°F SAE 20, 20W, or 10W-30 between 20°F and 90°F SAE 10W or 10W-30 between −10°F and 20°F SAE 5W or 5W-20 for prevailing temperatures below −10°F Certified sequence—tested engine oils are described on their containers by such phrases as: meets, excels, exceeds, or has proven superior in the test requirements, test sequences, MS Service tests, standards, and service requirements of automotive manufacturers, automakers, car makers, or car manufacturers for MS Service or Service MS.
	Check Cruise-O-Matic Transmission Fluid Level, and Add Fluid as Required	Ford Automatic Transmission Fluid C1AZ-19582-A. Equivalent substitute automatic transmission fluids must conform to Ford Specification M-2C33-C.
	Check Power Steering Pump Reservoir Fluid Level and add Fluid as Required	Ford Automatic Transmission Fluid C1AZ-19582-A, or Automatic Transmission Fluid Type A, Suffix A.
	Check Brake Master Cylinder Fluid Level, and Add Fluid as Required	Ford Heavy-Duty Brake Fluid 1A-19542-B

CONTINUED ON NEXT PAGE

MAINTENANCE SCHEDULE (Continued)

Odometer Reading (Miles)	Operation	Lubricant
12,000 (continued)	Check Rear Axle Lubricant Level, and Add Lubricant as Required	Ford Hypoid Gear Lubricant. Equivalent substitute rear axle lubricants must conform to Ford Specification M-2C50-B.
	Clean Carburetor Air Cleaner Filter Element	
	Clean Crankcase Breather Cap and Filter	
	Clean Positive Crankcase Ventilation Emission Valve	
	Clean Body and Door Drain Holes	
	Adjust Cruise-O-Matic Bands.	
	Adjust Ignition Timing	
	Adjust Carburetor Idle Speed, and Idle Fuel Mixture	
	Adjust Tension of Fan, Air Conditioner Compressor, and Power Steering Pump Drive Belts	
	Cross-Switch Wheels and Tires	
	Lubricate Front Suspension Ball Joints	Chassis Lubricant
	Lubricate Steering Linkage	Chassis Lubricant
	Lubricate Drive Shaft Universal Joints	Ford Universal Joint Grease. Equivalent Substitute Universal Joint Greases must conform to Ford Specification M-1C27
	Adjust Steering Gear Preload and Backlash	
18,000	Change Engine Oil and Replace Oil Filter	Certified Sequence—Tested Engine Oil— SAE 30 or 10W-30 for prevailing temperatures above 90°F SAE 20, 20W, or 10W-30 between 20°F and 90°F SAE 10W or 10W-30 between −10°F and 20°F SAE 5W or 5W-20 for prevailing temperatures below −10°F Certified sequence—tested engine oils are described on their containers by such phrases as: meets, excels, exceeds, or has proven superior in the test requirements, test sequences, MS Service tests, standards, and service requirements of automotive manufacturers, automakers, car makers, or car manufacturers for MS Service or Service MS.

CONTINUED ON NEXT PAGE

MAINTENANCE SCHEDULE (Continued)

Odometer Reading (Miles)	Operation	Lubricant
18,000 (continued)	Check Cruise-O-Matic Transmission Fluid Level, and Add Fluid as Required	Ford Automatic Transmission Fluid C1AZ-19582-A. Equivalent substitute automatic transmission fluids must conform to Ford Specification M-2C33-C.
	Check Power Steering Pump Reservoir Fluid Level, and Add Fluid as Required	Ford Automatic Transmission Fluid C1AZ-19582-A, or Automatic Transmission Fluid Type A, Suffix A.
	Check Brake Master Cylinder Fluid Level, and Add Fluid as Required	Ford Heavy-Duty Brake Fluid 1A-19542-B
	Check Rear Axle Lubricant Level, and Add Lubricant as Required	Ford Hypoid Gear Lubricant. Equivalent substitute rear axle lubricants must conform to Ford Specification M-2C50-B.
	Clean Carburetor Air Cleaner Filter Element	
	Clean Crankcase Breather Cap and Filter	
	Clean Positive Crankcase Ventilation Emission Valve	
	Clean Body and Door Drain Holes	
	Cross-Switch Wheels and Tires	
	Lubricate Front Suspension Ball Joints	Chassis Lubricant
	Lubricate Steering Linkage	Chassis Lubricant
	Lubricate Drive Shaft Universal Joints	Ford Universal Joint Grease. Equivalent Substitute Universal Joint Greases must conform to Ford Specification M-1C27
24,000	Change Engine Oil and Replace Oil Filter	Certified Sequence—Tested Engine Oil— SAE 30 or 10W-30 for prevailing temperatures above 90°F SAE 20, 20W, or 10W-30 between 20°F and 90°F SAE 10W or 10W-30 between −10°F and 20°F SAE 5W or 5W-20 for prevailing temperatures below −10°F Certified sequence—tested engine oils are described on their containers by such phrases as: meets, excels, exceeds, or has proven superior in the test requirements, test sequences, MS Service tests, standards, and service requirements of automotive manufacturers, automakers, car makers, or car manufacturers for MS Service or Service MS.

CONTINUED ON NEXT PAGE

MAINTENANCE SCHEDULE (Continued)

Odometer Reading (Miles)	Operation	Lubricant
24,000 (continued)	Check Cruise-O-Matic Transmission Fluid Level, and Add Fluid as Required	Ford Automatic Transmission Fluid C1AZ-19582-A. Equivalent substitute automatic transmission fluids must conform to Ford Specification M-2C33-C.
	Check Power Steering Pump Reservoir Fluid Level, and Add Fluid as Required	Ford Automatic Transmission Fluid C1AZ-19582-A, or Automatic Transmission Fluid Type A, Suffix A.
	Check Brake Master Cylinder Fluid Level, and Add Fluid as Required	Ford Heavy-Duty Brake Fluid 1A-19542-B
	Check Rear Axle Lubricant Level, and Add Lubricant as Required	Ford Hypoid Gear Lubricant. Equivalent substitute rear axle lubricants must conform to Ford Specification M-2C50-B.
	Clean Carburetor Air Cleaner Filter Element	
	Clean Crankcase Breather Cap and Filter	
	Clean Positive Crankcase Ventilation Emission Valve	
	Clean Body and Door Drain Holes	
	Adjust Ignition Timing	
	Adjust Carburetor Idle Speed and Idle Fuel Mixture	
	Adjust Tension of Fan, Air Conditioner Compressor, and Power Steering Pump Drive Belts	
	Cross-Switch Wheels and Tires	
	Lubricate Front Suspension Ball Joints	Chassis Lubricant
	Lubricate Steering Linkage	Chassis Lubricant
	Lubricate Drive Shaft Universal Joints	Ford Universal Joint Grease. Equivalent Substitute Universal Joint Greases must conform to Ford Specification M-1C27
	Check Front Wheel Alignment	
30,000	Change Engine Oil and Replace Oil Filter	Certified Sequence—Tested Engine Oil— SAE 30 or 10W-30 for prevailing temperatures above 90°F SAE 20, 20W, or 10W-30 between 20°F and 90°F SAE 10W or 10W-30 between −10°F and 20°F SAE 5W or 5W-20 for prevailing temperatures below −10°F

CONTINUED ON NEXT PAGE

MAINTENANCE SCHEDULE (Continued)

Odometer Reading (Miles)	Operation	Lubricant
30,000 (continued)		Certified sequence—tested engine oils are described on their containers by such phrases as: meets, excels, exceeds, or has proven superior in the test requirements, test sequences, MS Service tests, standards, and service requirements of automotive manufacturers, automakers, car makers, or car manufacturers for MS Service or Service MS.
	Check Cruise-O-Matic Transmission Fluid Level, and Add Fluid as Required	Ford Automatic Transmission Fluid C1AZ-19582-A. Equivalent substitute automatic transmission fluids must conform to Ford Specification M-2C33-C.
	Check Power Steering Pump Reservoir Fluid Level, and Add Fluid as Required	Ford Automatic Transmission Fluid C1AZ-19582-A, or Automatic Transmission Fluid Type A, Suffix A.
	Check Brake Master Cylinder Fluid Level, and Add Fluid as Required	Ford Heavy-Duty Brake Fluid 1A-19542-B
	Check Rear Axle Lubricant Level, and Add Lubricant as Required	Ford Hypoid Gear Lubricant. Equivalent substitute rear axle lubricants must conform to Ford Specification M-2C50-B.
	Replace Carburetor Air Cleaner Filter Element	
	Clean Crankcase Breather Cap and Filter	
	Clean Positive Crankcase Ventilation Emission Valve	
	Clean Body and Door Drain Holes	
	Cross-Switch Wheels and Tires	
	Lubricate Front Suspension Ball Joints	Chassis Lubricant
	Lubricate Steering Linkage	Chassis Lubricant
	Lubricate and Adjust Front Wheel Bearings	Ford Wheel Bearing Grease 8A-19585-B
	Lubricate Drive Shaft Universal Joints	Ford Universal Joint Grease. Equivalent Substitute Universal Joint Greases must conform to Ford Specification M-1C27
	Check Brake Lines and Linings	

PART 12-2 MAINTENANCE OPERATIONS

MAINTENANCE OPERATIONS

LUBRICATE FRONT SUSPENSION BALL JOINTS	Apply the recommended lubricant to each ball joint fitting with a pressure gun.	
LUBRICATE STEERING LINKAGE	Apply the recommended lubricant to each ball joint fitting with a pressure gun.	
CHANGE ENGINE OIL AND REPLACE OIL FILTER	Drain the oil from the crankcase, and remove and discard the oil filter. Install a new filter, and fill the crankcase to the full mark on the oil level	dipstick. Run the engine at idle speed and check for oil leaks at the filter and drain plug. Recheck the oil level and add oil if necessary.
CLEAN CRANKCASE BREATHER CAP AND (IF SO EQUIPPED) POSITIVE CRANKCASE VENTILATION SYSTEM	Remove the breather cap and wash it in solvent. Remove the crankcase ventilation emission valve, exhaust tube, and connections. Clean the valve and exhaust tube in clean carb-	uretor solvent, and dry them with compressed air. Clean the rubber hose connections with a low volatility petroleum base solvent, and dry them with compressed air.
CHECK CRUISE-O-MATIC TRANSMISSION FLUID LEVEL	With the engine running at idle speed, the fluid at a normal operating temperature, and the transmission selector lever at P (park), the fluid	level should be maintained at the full mark on the dipstick. See Part 5-2 for complete procedure on checking and adding fluid.
CHECK POWER STEERING RESERVOIR FLUID LEVEL	The fluid level in the reservoir should be maintained 1 inch from the top. The fluid should be at	normal operating temperature before checking the level.
CHECK BRAKE MASTER CYLINDER FLUID LEVEL	The fluid level should be maintained ⅜ inch below the top of the filler opening.	
CHECK REAR AXLE LUBRICANT LEVEL	The lubricant level should be maintained at the bottom of the filler hole.	
CLEAN CARBURETOR AIR CLEANER ELEMENT	Remove the element from the air cleaner body, and direct clean compressed air against the element in the opposite direction of normal air	flow from the inside out. Clean the air cleaner body and cover in solvent, and wipe them dry.
ADJUST STEERING GEAR PRELOAD AND BACKLASH	Complete steering gear adjustment procedures are given in Part 8-1.	

CONTINUED ON NEXT PAGE

MAINTENANCE OPERATIONS (Continued)

CROSS-SWITCH WHEELS AND TIRES	All tires, including the spare, should be cross-switched as shown in Part 8-1.
LUBRICATE AND ADJUST FRONT WHEEL BEARINGS	Front wheel bearing adjustment information is provided in Part 8-1.
LUBRICATE DRIVE SHAFT UNIVERSAL JOINTS	Repack the universal joints with the recommended lubricant.
REPLACE CARBURETOR AIR CLEANER ELEMENT	Remove the air cleaner from the carburetor. Clean the air cleaner body. Insert a new element and assemble the components.
PERFORM SELECTAIRE SEASONAL SERVICES	Check the air conditioner system for refrigerant or oil leaks, and for the state of refrigerant charge.

PART 12-3 TOOLS

TRANSMISSION

Tool No.	Source	Tool Name and Purpose
1175-AB	Manzel	Cruise-O-Matic Front Pump and Extension Housing Oil Seal and Steering Gear Lower Worm Bearing Cup Remover
7000-CJ	Manzel	Transmission Assembly and Disassembly Holder
7000-DD	Manzel	Air Nozzle Tip
7000-DE	Manzel	Air Nozzle Assembly with Rubber Tip
7000-E	Manzel	Transmission High Jack
7000-EG	Manzel	Universal Adapter for 7000-E
7000-H	Manzel	Oil Drain Can with Removable Filter
7064	Manzel	Snap Ring Pliers
7975	Manzel	Transmission to Converter Assembly Guide Pin
77530-A	Manzel	Primary, Secondary Clutches & Converter Assembly Holder
77763	Manzel	Throttle Valve Stop Bending Tool
77869-A	Manzel	Rear Pump Discharge Tube Remover and Replacer

FRONT SUSPENSION

Tool No.	Source	Tool Name and Purpose
2086-L	Manzel	Brake Shoe Return Spring Remover and Replacer
3590-FC	Manzel	Steering Arm Remover
3600-AA	Manzel	Steering Wheel Remover
CJ-94	Snap-On	Steering Arm Remover

BRAKES

Tool No.	Source	Tool Name and Purpose
1112-144	Milbar	Snap Torque Wrench for Brake Lines at Wheel Cylinder

ENGINE

Tool No.	Source	Tool Name and Purpose
835	K. R. Wilson	Engine Stand (Existing)
1009	K. R. Wilson	Engine Stand (New)
3600-E	Manzel	Piston Pull Scale
6001-102	Manzel	Outboard Support (For 6001-ES Stand)
6001-AF	Manzel	Engine to Twin Post Stand Adapters
6001-TES	Manzel	Engine Stand (New)
6392-N	K. R. Wilson	Flywheel Housing Check Adapter Plate
6505-F	Manzel	Valve Stem Clearance Gauge
6513-CE-2	Manzel	Exhaust Valve Micrometer
7513-EE	Manzel	Valve Spring Compressor
12132	Manzel	Distributor Shaft Bushing Burnisher
12132-A	Manzel	Distributor Shaft Bushing Replacer
12132-H	Manzel	Distributor Shaft Bushing Remover
12150-E	Manzel	Distributor Adjustment Wrench
LM-106	Manzel	Valve Spring Tester
RC-500	Snap-On	Ring Groove Cleaner
33-73F	Burroughs	Belt Tension Gauge

REAR AXLE AND SUSPENSION

Tool No.	Source	Tool Name and Purpose
951	Owatonna	Universal Bearing Remover
1175-AB	Manzel	
1177	Manzel	Axle Shaft Oil Seal Replacer
4201-C	Manzel	Ring Gear Backlash Indicator
4245-B	Manzel	Axle Bearing Oil Seal Replacer
4858-E	Manzel	Companion Flange and Pinion Bearing Replacer
CJ-951	Snap-On	Universal Bearing Remover

BODY

Tool No.	Source	Tool Name and Purpose
59538-A	Snap-On	Door Handle Tool

1962 FORD THUNDERBIRD SHOP MANUAL

INDEX

Page

A

AIR CLEANER 3-7
AIR CONDITIONING 10-17
AXLE 6-2

B

BATTERY 9-10
BODY 11-2
Alignment 11-3
Body Drawings 11-9
Panel Repair 11-6
Sealers and Application 11-7
BRAKES 8-15
Hydraulic 8-15
Parking 8-23
BUMPERS 11-16

C

CAMSHAFT 1-25
Bearings 1-36
Lobe Lift 1-12
Rear Bearing Bore Plug Replacement 1-26
Removal and Installation 1-25
CARBURETOR 3-8
Bench Adjustments 3-17
Disassembly and Assembly 3-12
In-Chassis Adjustments 3-5
Removal and Installation 3-12
Trouble Diagnosis 3-4
CIRCUIT BREAKER 10-1
COIL 2-3
COMPRESSION TEST—ENGINE 1-13
CONDENSER 2-4
CONNECTING RODS 1-28
COOLING SYSTEM 4-2
CONVERTIBLE TOP 11-39
CRANKCASE VENTILATION SYSTEMS 1-40
CRANKSHAFT 1-34
Removal and Installation 1-34
Reconditioning 1-36

Page

CRUISE-O-MATIC 5-2
CYLINDER BLOCK 1-38
CYLINDER FRONT COVER 1-23
Crankshaft Front Oil Seal Replacement 1-25
CYLINDER HEAD 1-19

D

DECK LID (Convertible) 11-41
DECK LID (Hard Top) 11-37
DEFROSTER 10-15
DISTRIBUTOR 2-11
Adjustments 2-6
Breaker Point Replacement 2-7
Disassembly and Assembly 2-12
Removal and Installation 2-12
Tests 2-2
DOORS 11-29
DRIVE BELT 4-4

E

ELECTRICAL WIRING DIAGRAM (Complete) 10-33
ENGINE 1-2
Disassembly and Assembly 1-36
Removal and Installation 1-13
Supports 1-15
Tests and Adjustments 1-12
Trouble Diagnosis 1-6
EXHAUST SYSTEM 1-41

F

FAN REPLACEMENT 4-4
FLYWHEEL 1-32
FUEL FILTER REPLACEMENT 3-5
FUEL LINE REPLACEMENT 3-19
FUEL PUMP 3-18
FUEL SENDING UNIT 10-9
FUEL SYSTEM 3-2
FUEL TANK REPLACEMENT 3-19
FUSES 10-1

Page

G

GENERATOR 9-2
GRILLE REPLACEMENT 11-16

H

HEATER 10-14
HOISTING 11-2
HOOD 11-15
HORNS 10-8
HYDRAULIC VALVE LIFTER REPLACEMENT 1-26

I

IGNITION SYSTEM 2-2
Switch and Lock Cylinder 10-7
Timing 2-9
INSTRUMENTS 10-8
INTERIOR TRIM 11-18

J

JACKING 11-3

L

LIGHTS 10-3
LOCKS
Door and Deck Lid Locks 11-30
Ignition Lock 10-7

M

MAIN BEARING REPLACEMENT 1-28
MAINTENANCE AND LUBRICATION PROCEDURE GUIDE 12-8
MAINTENANCE AND LUBRICATION QUICK REFERENCE GUIDE 12-2
MANIFOLD
Exhaust 1-18
Intake Vacuum Test 1-13
MOULDINGS 11-28

O

OIL FILTER REPLACEMENT 1-32
OIL PAN 1-32
OIL PRESSURE SENDING UNIT 10-9
OIL PUMP 1-32

P

PISTON 1-30
PISTON AND CONNECTING ROD ASSEMBLY
Disassembly and Assembly 1-28
Removal and Installation 1-28
PISTON PIN 1-30
PISTON RINGS 1-32

Page

POWER BRAKES 8-25
POWER STEERING 7-2
POWER WINDOWS 11-31
PUSH RODS 1-22

R

RADIATOR 4-3
RADIO 10-12
REGULATOR 9-7
Adjustments and Replacement 9-9
Tests 9-8
Trouble Diagnosis 9-2
RESISTANCE WIRE 2-10

S

SEATS 11-23
SHOCK ABSORBERS 8-9
SPARK PLUGS 2-9
SPARK PLUG WIRE REPLACEMENT 2-9
SPRING, FRONT 8-10
SPRING, REAR 8-13
STARTER 9-12
Drive 9-19
Repair 9-17
STEERING 7-2
SUSPENSION 8-8
Adjustments and Alignment 8-6
Front Suspension 8-8
Rear Suspension 8-13

T

TEMPERATURE SENDING UNIT 10-10
THERMOSTATS 4-3
THROTTLE LINKAGE 5-10
TIMING CHAIN AND SPROCKETS 1-23
TIRES 8-3
TOOLS, SPECIAL 12-10
TRANSMISSION 5-2

V

VALVES 1-19
VALVE CLEARANCE ADJUSTMENT 1-12
VALVE ROCKER ARM SHAFT ASSEMBLY
Disassembly and Assembly 1-16
Removal and Installaiton 1-15

W

WATER PUMP 4-7
WHEELS 8-2
WHEEL BEARINGS 8-2
WINDOWS 11-32

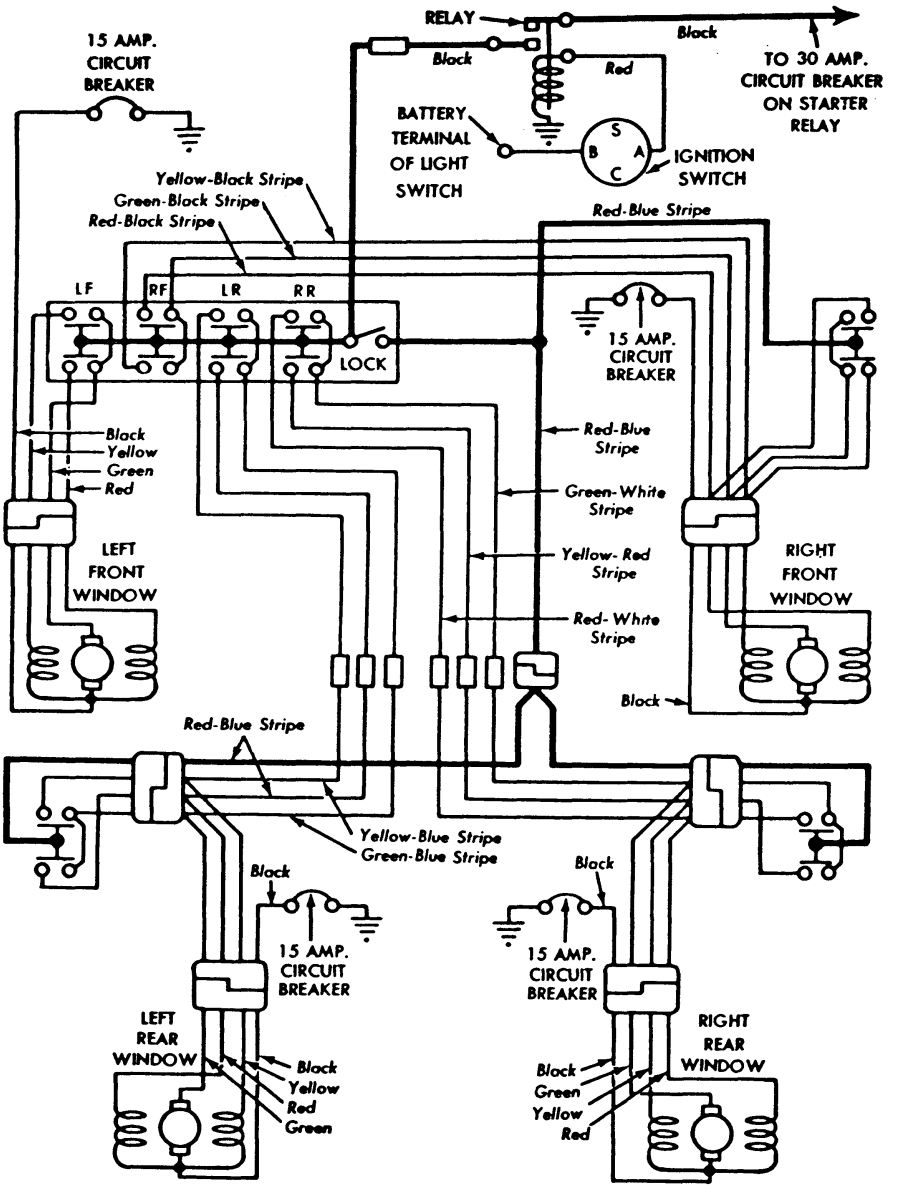

Power Window Circuit . . 1962

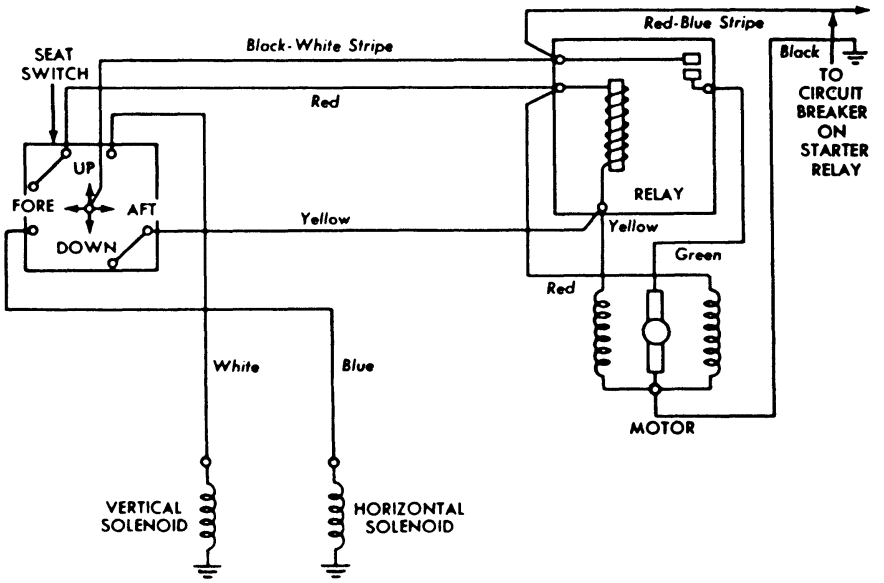

Power Seat Circuit . . 1962

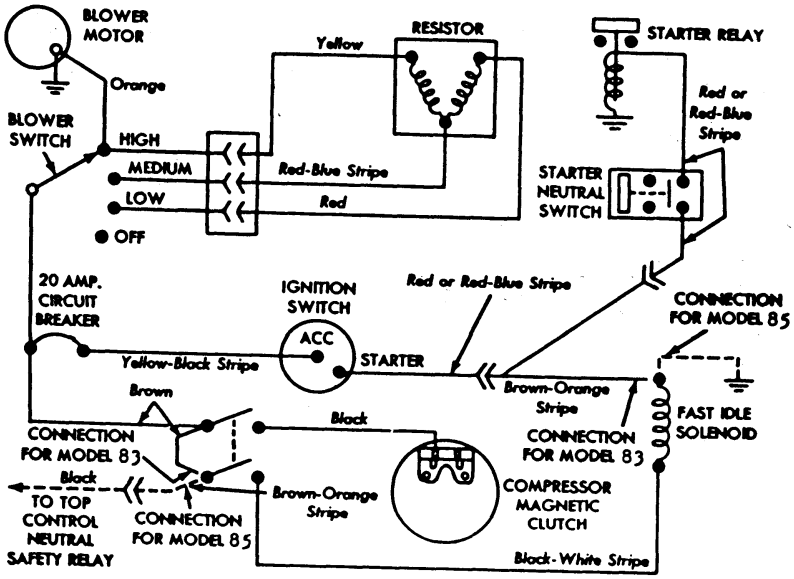

Air Conditioner Circuit . . 1962

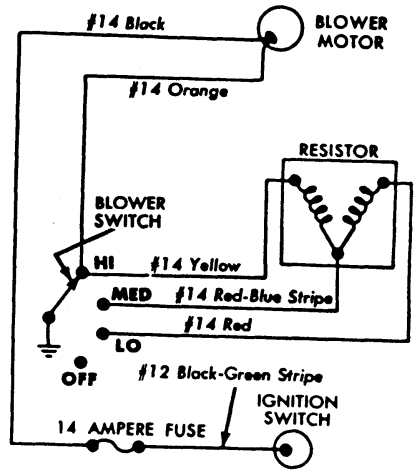

Heater Circuit . . 1962

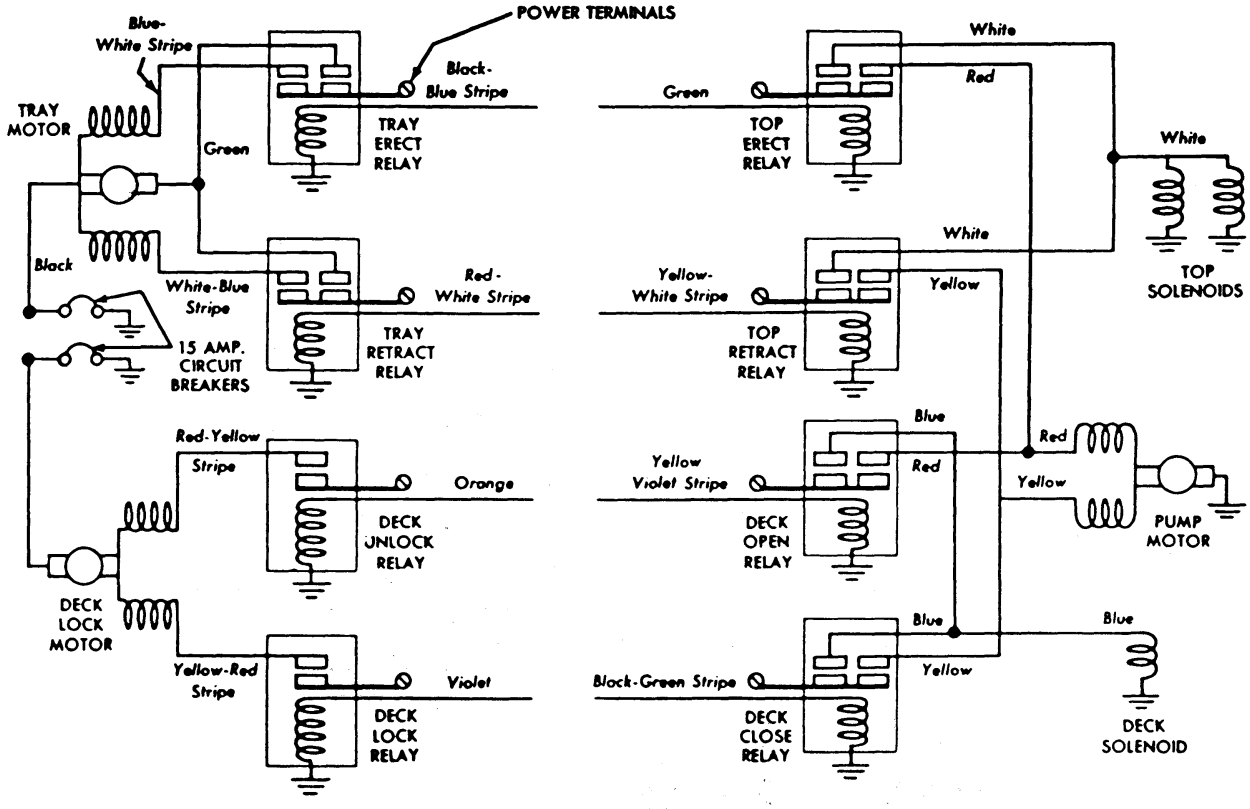

Convertible Top System Solenoid & Motor Feed Circuits . . 1962

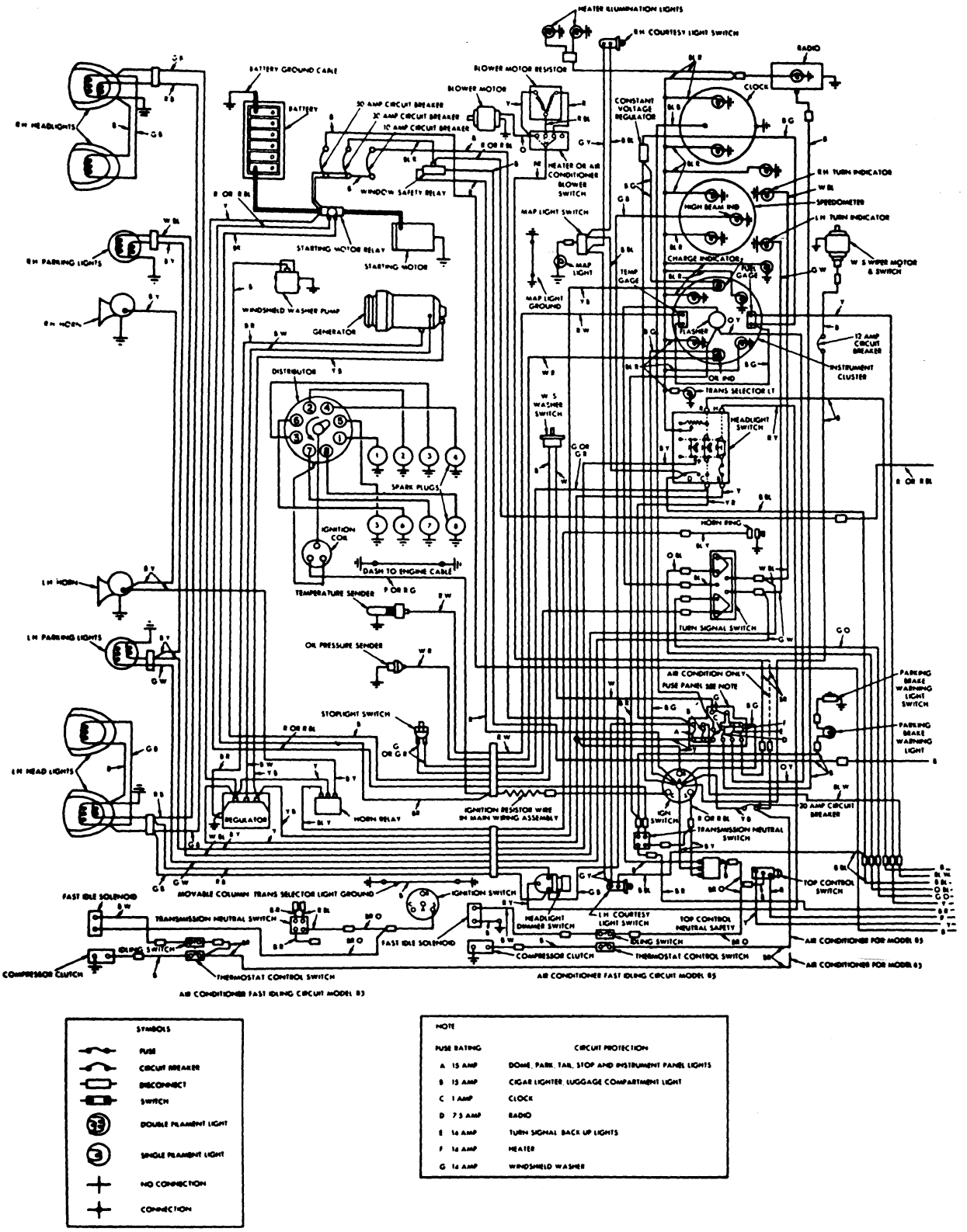

SYMBOLS
FUSE
CIRCUIT BREAKER
DISCONNECT
SWITCH
DOUBLE FILAMENT LIGHT
SINGLE FILAMENT LIGHT
NO CONNECTION
CONNECTION

NOTE

FUSE RATING	CIRCUIT PROTECTION
A 15 AMP	DOME, PARK, TAIL, STOP AND INSTRUMENT PANEL LIGHTS
B 15 AMP	CIGAR LIGHTER, LUGGAGE COMPARTMENT LIGHT
C 1 AMP	CLOCK
D 7.5 AMP	RADIO
E 16 AMP	TURN SIGNAL BACK UP LIGHTS
F 16 AMP	HEATER
G 16 AMP	WINDSHIELD WASHER

1962 THUNDERBIRD CHASSIS WIRING —FRONT

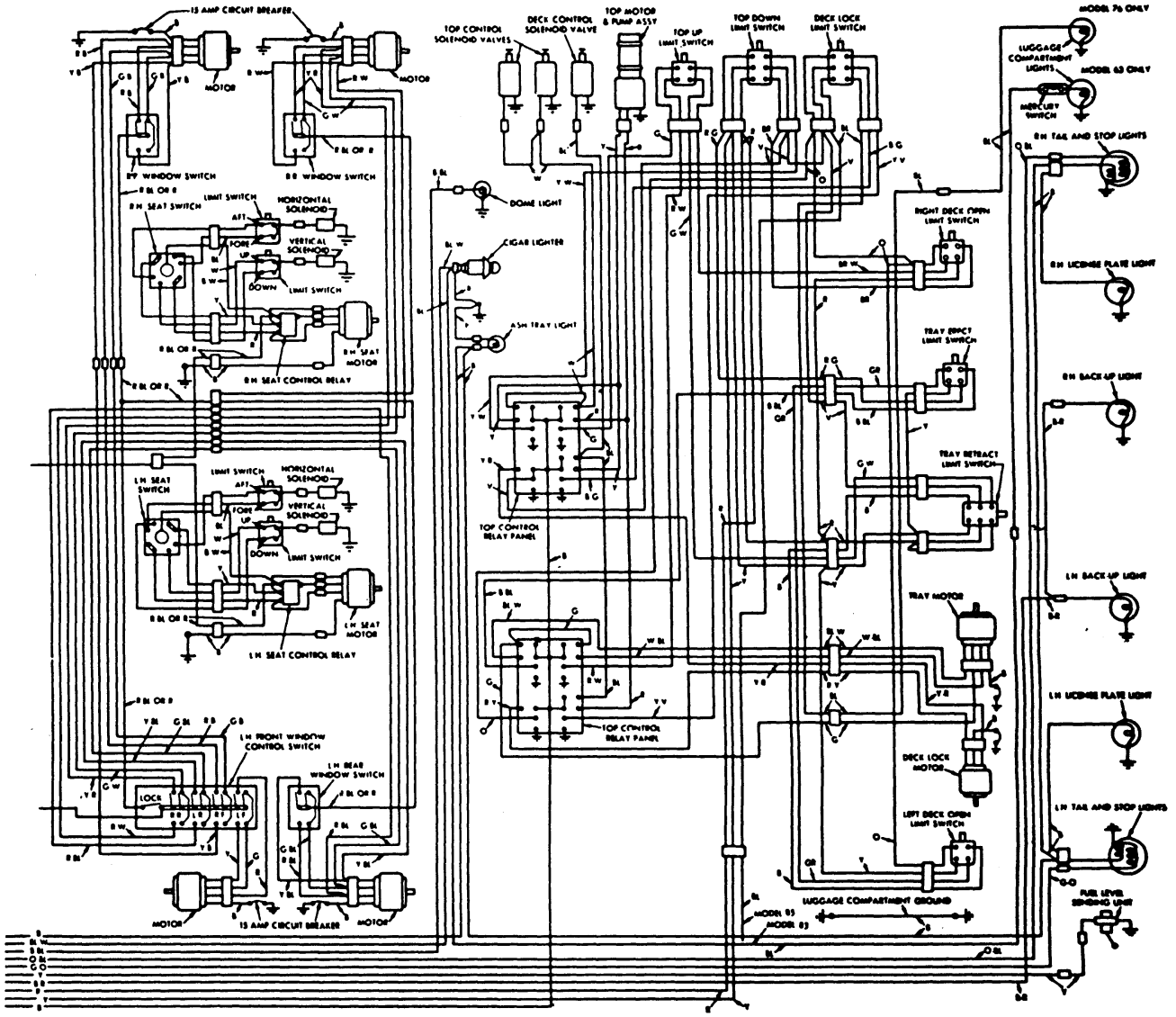

COLOR KEY

B — BLACK	BL B — BLUE BLACK STRIPE	G — GREEN	O — ORANGE	R G — RED GREEN STRIPE	Y — YELLOW
B BL — BLACK BLUE STRIPE	BL R — BLUE RED STRIPE	G B — GREEN BLACK STRIPE	O BL — ORANGE BLUE STRIPE	R W — RED WHITE STRIPE	Y B — YELLOW BLACK STRIPE
B G — BLACK GREEN STRIPE	BL W — BLUE WHITE STRIPE	G BL — GREEN BLUE STRIPE	O Y — ORANGE YELLOW STRIPE	R Y — RED YELLOW STRIPE	Y BL — YELLOW BLUE STRIPE
B R — BLACK RED STRIPE	BL Y — BLUE YELLOW STRIPE	G O — GREEN ORANGE STRIPE	P — PINK	V — VIOLET	Y R — YELLOW RED STRIPE
B W — BLACK WHITE STRIPE	BR — BROWN	G W — GREEN WHITE STRIPE	R — RED	W — WHITE	Y V — YELLOW VIOLET STRIPE
B Y — BLACK YELLOW STRIPE	BR O — BROWN ORANGE STRIPE	G Y — GREEN YELLOW STRIPE	R B — RED BLACK STRIPE	W BL — WHITE BLUE STRIPE	Y W — YELLOW WHITE STRIPE
BL — BLUE	BR W — BROWN WHITE STRIPE	GR — GREY	R BL — RED BLUE STRIPE	W R — WHITE RED STRIPE	

1962 THUNDERBIRD CHASSIS WIRING - REAR

1963 FORD THUNDERBIRD

SHOP MANUAL SUPPLEMENT

GROUP INDEX

THUNDERBIRD IDENTIFICATION

ENGINE AND EXHAUST SYSTEM 1

IGNITION SYSTEM 2

FUEL SYSTEM 3

COOLING SYSTEM 4

CRUISE-O-MATIC TRANSMISSION 5

REAR AXLE AND DRIVE LINE 6

STEERING 7

BRAKES AND SUSPENSION 8

GENERATING AND STARTING SYSTEMS 9

LIGHTS, INSTRUMENTS AND ACCESSORIES 10

BODY 11

MAINTENANCE, LUBRICATION AND SPECIAL TOOLS 12

SPECIFICATIONS 13

SERVICE DEPARTMENT
FORD DIVISION
MOTOR COMPANY

FIRST PRINTING—SEPTEMBER, 1962

FOREWORD

The information in this supplement, when used with the 1962 Ford Thunderbird Shop Manual, provides the necessary information for servicing the 1963 Thunderbird. Complete 1963 maintenance information and specifications are included.

The descriptions and specifications contained in this supplement were in effect at the time the manual was approved for printing. The Ford Division of Ford Motor Company reserves the right to discontinue models at any time, or change specifications or design, without notice and without incurring obligation.

SERVICE DEPARTMENT
FORD DIVISION
FORD MOTOR COMPANY

THUNDERBIRD IDENTIFICATION

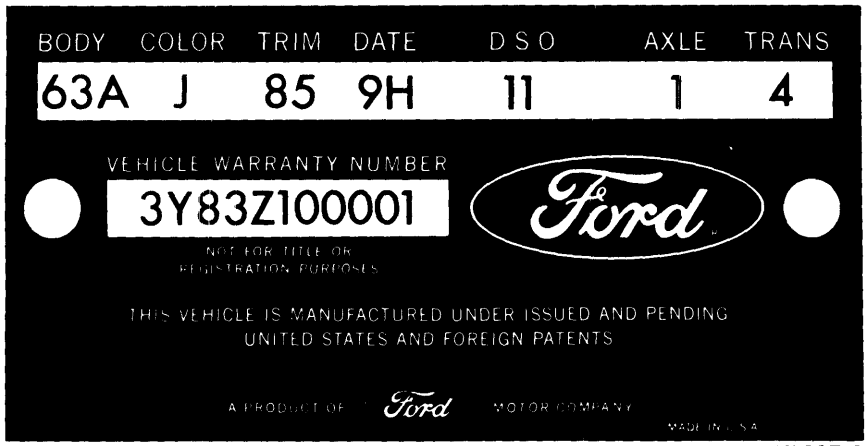

M1087-A

FIG. 1—Thunderbird Warranty Plate

Figure 1 illustrates a Thunderbird Warranty plate and its elements. The Warranty plate is attached to the left door front pillar.

The official Vehicle Identification number for title and registration purposes is stamped on the body just forward of the right-hand hood lock plate (Fig. 2). Do not use the Vehicle Warranty number which appears on the Warranty plate for title or registration purposes.

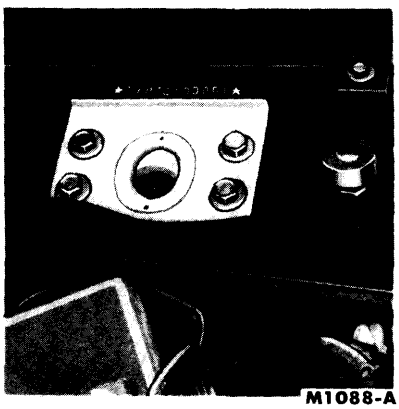

M1088-A

FIG. 2—Vehicle Identification Number Location

VEHICLE DATA

Example (Fig. 1):

63A	J	85	9H	11	1	4

63A	Tudor Hardtop
J	Red
85	Red Leather
9H	Ninth day of August
11	District Code
1	3.00:1 Axle Ratio
4	Cruise-O-Matic

BODY

63A	Tudor Hardtop
76A	Tudor Convertible

COLOR

If a special paint is used, the paint color space will not be stamped.

Code	M30J/M32J Number	Color	Sales Name
A	1724	Black	Raven Black
D	1070	Med. Turquoise Metallic	Patrician Green
E	1269	Med. Blue Metallic	Acapulco Blue
G	1446	Silver Blue Metallic	Silver Mink
H	1544	Dark Blue Metallic	Caspian Blue
J	1515	Red	Rangoon Red
K	1452	Lt. Turquoise	Chalfonte Blue
L	1458	Pink	Sahara Rose
M	1238	White	Corinthian White
N	921	Diamond Blue	Diamond Blue
O	1554	Med. Green Metallic	Green Mist
R	1456	Yellow	Tucson Yellow
S	1453	Dk. Green Metallic	Cascade Green
T	1543	Lt. Beige	Sandshell Beige
U	1450	Dark Turquoise Metallic	Deep Sea Blue
V	1470	Chestnut Metallic	Chestnut
W	1555	Lt. Pink Metallic	Rose Beige
X	1444	Maroon Metallic	Heritage Burgundy
Z	1427	Beige Metallic	Fieldstone Tan

TRIM

Deviation trim sets will use existing trim codes plus a suffix. A trim code with a numerical suffix is not serviced, while a trim code with an alphabetical suffix is serviced.

Code	Crinkle Vinyl	Pin Stripe B/C
72	Lt. Blue D/L	Dk. Blue
77	Lt. Turquoise D/L	Dk. Turquoise
74	Pearl Beige	Med. Beige
76	Black	Black

Code	Crinkle Vinyl	Vachette Vinyl
52	Med. Blue D/L	Lt. Blue D/L
57	Med. Turquoise D/L	Lt. Turquoise D/L
59	Med. Chestnut D/L	Med. Chestnut D/L
54	Pearl Beige	Pearl Beige
56	Black	Black
55	Red	Red
50	Med. Silver Blue Met.	Lt. Silver Blue D/L
58	Lt. Gold D/L	Lt. Gold D/L
51	Lt. Rose Beige D/L	Lt. Rose Beige D/L

Code	Crinkle Leather	Vachette Leather
82	Lt. Blue D/L	Lt. Blue D/L
84	Pearl Beige	Pearl Beige
86	Black	Black
85	Red	Red

DATE

The code letters for the month are preceded by a numeral to show the day of the month when the Thunderbird was completed. The second year code letters are to be used if model production exceeds 12 months.

Month	First Model Year	Second Model Year
January	A	N
February	B	P
March	C	Q
April	D	R
May	E	S
June	F	T
July	G	U
August	H	V
September	J	W
October	K	X
November	L	Y
December	M	Z

DSO

Thunderbirds built to a Domestic Special Order, Foreign Special Order, or Pre-Approved Order have the complete order number recorded in this space. Also appearing in this space is the two digit code number of the District which ordered the unit. If the unit is regular production, only the District code number will appear.

DISTRICT CODE

Code	District	Code	District
11	Boston	45	Davenport
12	Buffalo	51	Denver
13	New York	52	Des Moines
14	Pittsburgh	53	Kansas City
15	Newark	54	Omaha
21	Atlanta	55	St. Louis
22	Charlotte	61	Dallas
23	Philadelphia	62	Houston
24	Jacksonville	63	Memphis
25	Richmond	64	New Orleans
26	Washington	65	Oklahoma City
31	Cincinnati	71	Los Angeles
32	Cleveland	72	San Jose
33	Detroit	73	Salt Lake City
34	Indianapolis	74	Seattle
35	Lansing	81	Ford of Canada
36	Louisville	83	Government
41	Chicago	84	Home Office Reserve
42	Fargo	85	American Red Cross
43	Rockford	89	Transportation Services
44	Twin Cities	90-99	Export

AXLE

Code	Ratio
1	3.00:1
A*	3.00:1

*Equa-Lock Type.

TRANSMISSION

Code	Type
4	Cruise-O-Matic

VEHICLE WARRANTY NUMBER

Example (Fig. 1): 3Y83Z100001

3	1963 Model
Y	Wixom Assembly Plant
83	Tudor Hardtop
Z	8-Cylinder 390 Cubic Inch Engine
100001	First Unit Built

MODEL YEAR

The number "3" designates 1963.

ASSEMBLY PLANT

Code	Location
Y	Wixom Assembly Plant
S	Pilot Plant

MODEL

Code	Type
83	Tudor Hardtop
85	Tudor Convertible
87	Tudor Landau
89	Tudor Roadster

ENGINE

Code	Type
M	8-Cylinder 390 Cubic Inch (6-barrel High Performance)
9	8-Cylinder 390 Cubic Inch (4-barrel Low Compression Export, 84 Octane)
Z	8-Cylinder 390 Cubic Inch (4-barrel)

CONSECUTIVE UNIT NUMBER

The assembly plant, with each model year, begins with consecutive unit number 100001 and continues on for each unit built.

GROUP 1—ENGINE AND EXHAUST SYSTEM

The 1963 maintenance recommendations are in Group 12 and the 1963 specifications are in Group 13 of this manual.

All the service procedures outlined in Group 1 of the 1962 Shop Manual apply for both the 1963 390 4-V engine and the 390 6-V High Performance engine with the following exceptions.

390 4-V ENGINE (Part 1-1)

CAMSHAFT

The camshaft and related parts are shown in Fig. 3.

Removal

1. Refer to "Valve Rocker Arm Shaft Assembly Removal" (page 1-15, 1962 Shop Manual) and remove the valve rocker arm shaft assemblies.

2. Remove the cylinder front cover following steps 1 thru 16 under "Cylinder Front Cover and Timing Chain Removal" (page 1-23, 1962 Shop Manual).

3. Remove the valve push rods in sequence and place them in a rack so that they can be installed in their original positions.

4. Position an inspection light through a push rod opening and into the valve push rod valley (Fig. 55, page 1-26, 1962 Shop Manual). Remove the valve lifters with a magnet through the push rod openings. In some cases, it will be necessary to transfer the lifter over to an adjoining push rod opening in order to remove it. Place the lifters in a rack so that they can be installed in their original positions.

5. Install a dial indicator so the indicator point is on the camshaft sprocket retaining screw. Push the camshaft toward the rear of the engine and set the dial indicator on zero. Pull the camshaft forward and release it. Compare the indicator reading with the specifications. If the end play is excessive, check the spacer for correct installation before it is removed. **The side of the spacer having a chamfer on the ID must be against the camshaft front journal.** If the spacer is installed correctly, replace the thrust plate.

6. Remove the dial indicator. Remove the camshaft sprocket cap screw, lock washer, flat washer, and fuel pump eccentric.

7. Slide both sprockets and the timing chain forward, and remove the sprockets and timing chain as an assembly (Fig. 49, 1962 Shop Manual).

8. Remove the oil pan and oil pump by following the procedure under "Oil Pan and Oil Pump Removal" (page 1-32, 1962 Shop Manual).

9. Remove the camshaft thrust plate and spacer. Carefully remove the camshaft by pulling it toward the front of the engine. **Use caution to avoid damaging the camshaft bearings.**

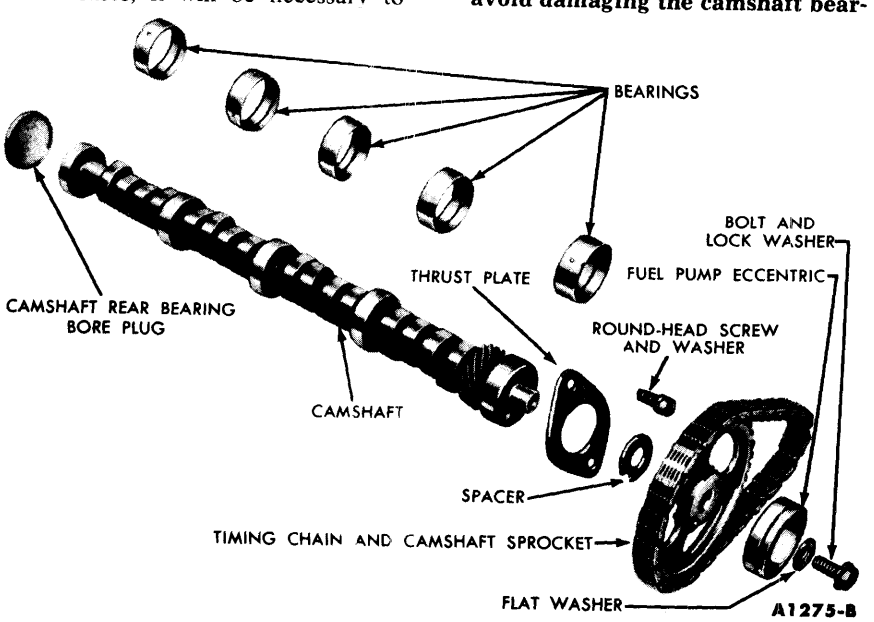

FIG. 3—Camshaft and Related Parts

Installation

1. Oil the camshaft and apply Lubriplate to the lobes. Carefully slide the camshaft through the bearings. Install the thrust plate. Install the thrust plate with the side having a chamfered ID against the camshaft front journal. **The oil groove in the thrust plate must be above the camshaft, and it must face towards the front (against the camshaft sprocket).**

2. Follow step 5 under "Camshaft Removal" and check the camshaft end play.

3. Position the sprockets and timing chain on the camshaft and crankshaft with the timing marks on the sprockets aligned as shown in Fig. 48, page 1-24, 1962 Shop Manual.

4. Install the fuel pump eccentric, flat washer, lock washer, and sprocket cap screw. Torque the sprocket cap screw to specifications. Install the front oil slinger.

5. Replace the crankshaft front oil seal. Install the cylinder front cover, the crankshaft damper, and related parts following steps 3 thru 16 under "Cylinder Front Cover and Timing Chain Installation" (page 1-24, 1962 Shop Manual).

6. With No. 1 piston on TDC at the end of the compression stroke, position the distributor in the block with the rotor at the No. 1 firing position and the points open. Install the hold down clamp.

7. Connect the distributor vacuum line. Install the distributor cap. Connect the coil high tension lead.

8. Install the valve lifters in the bores from which they were removed. Install the push rods.

9. Refer to "Valve Rocker Arm Shaft Assembly Installation" and install the valve rocker arm shaft assembly following steps 1 thru 9, page 1-16, 1962 Shop Manual.

10. Fill and bleed the cooling system. Fill the crankcase with the proper grade and quantity of engine oil.

11. Start the engine and check and adjust the ignition timing. Operate the engine at fast idle and check all hose connections and gaskets for leaks.

Cleaning and Inspection. Refer to the 1962 Shop Manual for cleaning and inspection procedures.

390 6-V HIGH PERFORMANCE ENGINE (Part 1-1)

The warranty plate identification symbol for the engine is "M". This engine is the same as the 390 4-V engine except for specifications (Group 13) and the following differences:

1. A cast aluminum intake manifold replaces the cast iron intake manifold used on the 390 4-V engine.
2. The coolant-heated carburetor spacer is eliminated.
3. The exhaust gas control valve is mounted with the counterweight on the outboard side of the engine.

EXHAUST SYSTEM (Part 1-2)

DESCRIPTION

A single exhaust system is standard equipment on all 1963 Thunderbirds. A dual exhaust system is available as optional equipment on all models.

The dual exhaust system (Fig. 3A) consists of: a one-piece muffler inlet pipe with separate front section inlet pipes that are joined together by a welded cross-over pipe; separate right and left inlet extension pipes; right and left mufflers that contain integral muffler outlet pipes; retaining clamps, brackets, nuts and bolts; two exhaust manifolds to inlet pipe gaskets.

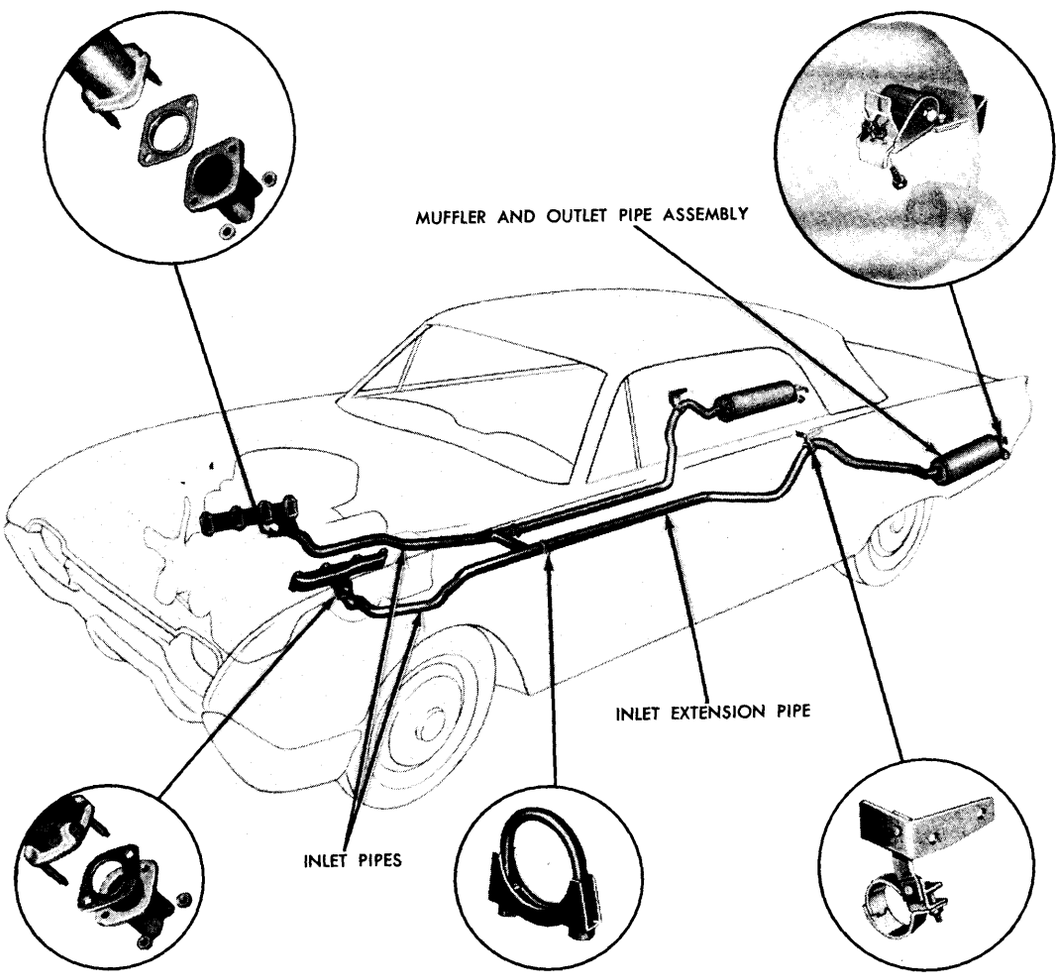

FIG. 3A—Dual Exhaust System

The single exhaust system (Fig. 3B) consists of: a one-piece muffler inlet pipe with "Y" type inlet pipes that are joined and welded together; a muffler with an integral outlet pipe; a muffler inlet extension pipe; retaining clamps, brackets, bolts and nuts; two exhaust manifolds to inlet pipe gaskets; a sealing gasket, located at the flange of the inlet pipe and the inlet extension pipe rear flange.

INLET PIPE, INLET EXTENSION PIPE, MUFFLER AND OUTLET PIPE REPLACEMENT

Muffler Inlet Pipe—Dual Exhaust. The muffler inlet pipe is serviced in one piece.

1. Loosen the muffler inlet pipe to inlet extension pipe clamps and slide the clamps forward on the inlet pipe. Disconnect the inlet pipe at the exhaust manifolds.
2. Disconnect the hanger bracket clamp from the inlet extension pipe. Remove the muffler rear bracket retaining bolts. Disconnect the inlet extension pipe from the inlet pipe and remove the inlet pipe.
3. Clean the mounting surfaces of the exhaust manifolds and the inlet pipes.
4. Install the gaskets, inlet pipes, and the retaining nuts. Torque the nuts to specifications.
5. Position the front clamp on the inlet extension pipe. Connect the inlet pipe and the inlet extension pipe;

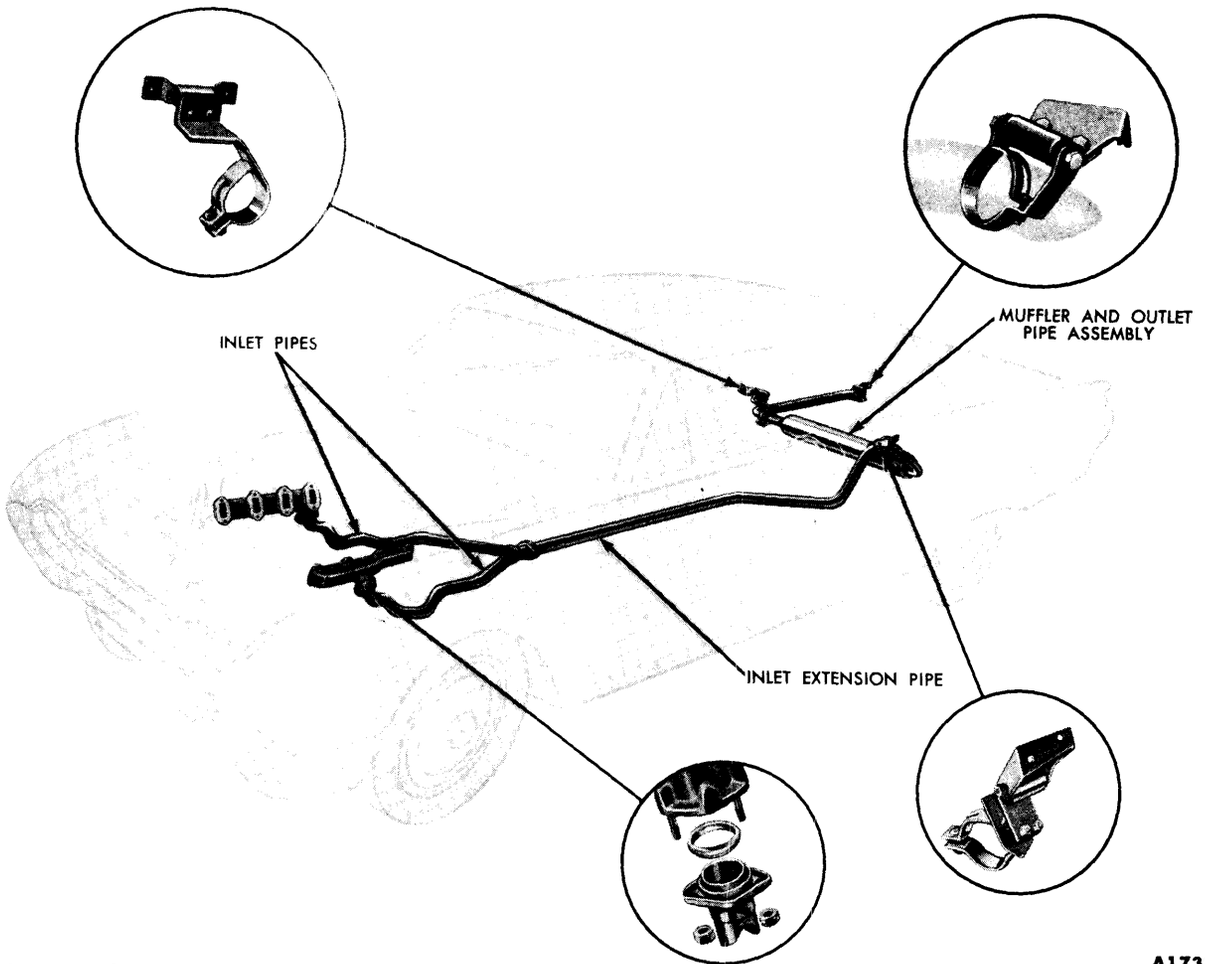

FIG. 3B—Single Exhaust System

then install the muffler, muffler rear bracket retaining bolts, and the inlet extension bracket clamp.

6. Align the exhaust system; then, torque the front clamp, inlet extension pipe bracket clamp, and muffler rear bracket retaining bolts to specifications.

7. Check the system for leaks

Muffler and Outlet Pipe – Dual Exhaust. The procedure applies to either a right or left assembly.

1. Loosen the muffler to muffler inlet extension pipe clamp and slide it forward on the extension pipe

2. Remove the retaining bolts and nuts securing the muffler rear bracket to the hanger assembly. Remove the muffler and outlet pipe assembly

3. Position the new muffler and outlet pipe assembly on the inlet extension pipe. Slide the muffler forward into the inlet extension pipe until the slots in the muffler extension are blocked.

4. Align the muffler and outlet pipe assembly. Install the muffler inlet extension pipe clamp and the muffler rear bracket retaining bolts and nuts. Torque the clamp and bolts to specifications.

5. Check the system for leaks.

Muffler Inlet Pipe Extension – Dual Exhaust. The procedure applies to either a right or left assembly.

1. Remove the muffler and outlet pipe assembly.

2. Loosen the muffler inlet extension pipe front clamp and remove the inlet extension pipe hanger bracket clamp. Remove the inlet extension pipe.

3. Position the inlet extension pipe front clamp on the end of the inlet pipe. Connect the inlet extension pipe to the inlet pipe. Install the inlet extension pipe front clamp and the hanger bracket clamp.

4. Install the muffler and outlet pipe assembly.

5. Torque the inlet extension pipe front and rear clamps and the hanger bracket clamp to specifications.

6. Check the system for leaks.

Muffler Inlet Pipe – Single Exhaust. The muffler inlet pipe is serviced as one piece.

1. Remove the retaining bolts and nuts from the inlet pipe to inlet extension pipe flange. Remove the clamp from the inlet extension pipe hanger bracket.

2. Disconnect the inlet pipes at the exhaust manifold. Remove the inlet pipe and gaskets from the exhaust manifolds.

3. Clean the mounting surfaces of the exhaust manifolds and the inlet pipes. Install the gaskets, inlet pipes, and retaining nuts. Torque the nuts to specifications.

4. Install a new gasket between the inlet pipe and the inlet pipe extension flange. Install the flange retaining bolts and nuts; then, torque them to specifications.

5. Install the inlet extension pipe hanger bracket clamp and torque the retaining nuts to specifications.

6. Check the system for leaks.

Muffler – Single Exhaust. The muffler and outlet pipe is serviced as

one piece.

1. Remove the outlet pipe front and rear hanger bracket clamps.

2. Remove the inlet extension pipe to muffler flange retaining bolts. Remove the flange gasket and the muffler and outlet pipe assembly.

3. Clean the muffler and inlet pipe extension flanges. Position the muffler flange and a new gasket on the inlet extension pipe flange. Install the retaining bolts and nuts.

4. Install the outlet pipe clamps and align the exhaust system; then, torque the clamp bolts and muffler flange bolts to specifications.

5. Check the system for leaks.

Muffler Inlet Extension Pipe—Single Exhaust

1. Remove the flange bolts from both flanges of the inlet extension pipe. Remove the clamp from the extension pipe hanger bracket.

2. Pry the muffler toward the right side of the car and remove the inlet extension pipe and the flange gaskets.

3. Clean the mating surfaces of the mounting flanges; then, position the inlet extension pipe on the inlet pipe and muffler flanges. Insert a new gasket between the front and the rear flanges. Install the mounting bolts and nuts.

4. Install the inlet extension pipe hanger bracket clamp. Torque the flange bolts and the hanger clamp bolt to specifications.

5. Check the system for leaks.

GROUP 2—IGNITION SYSTEM

The 1963 maintenance recommendations are in Group 12 and the 1963 specifications are in Group 13 of this manual.

The ignition system service procedures outlined in the 1962 Shop Manual apply to the 1963 Thunderbird. Refer to Group 2 of the 1962 manual for the recommended service procedures.

GROUP 3—FUEL SYSTEM

The 1963 maintenance recommendations are in Group 12 and the 1963 specifications are in Group 13 of this manual.

All the service procedures outlined in Group 3 of the 1962 Shop Manual remain the same for the 1963 390 4-V engine series except as described herein (Ford 4-V carburetor). Service procedures for the 1963 High Performance 390 6-V engine series (three Holley dual carburetors) are included in this supplement.

FORD 4-BARREL CARBURETOR

OPERATION

The carburetor incorporates the following changes:

1. A magnet and bracket assembly was added to the front wall of the carburetor air horn to entrap the choke plate in the closed position and increase the force holding the choke plate closed during cold engine starting.

2. A lower torque rate choke housing spring has been incorporated to reduce the forces tending to close the choke plate after the engine has started, thereby minimizing the tendency of the carburetor to overchoke the engine and cause "loading".

3. An external vent opening has been added to the secondary fuel bowl cover to provide an escape for the highly volatile fuel vapors, thereby reducing the possibility of flooding the intake system during a hot soak period.

4. Standpipe pitot tubes were added to the secondary fuel bowl internal vent openings to raise the level of the internal vent openings above the external vent openings. This provides the necessary pressure differential for proper evacuation of the gaseous vapors through the external vent during a hot soak period.

5. Two baffles have been added in the internal fuel equalizer passage between the primary and secondary fuel bowls to permit proper control of the metering forces within each fuel bowl, since these forces were thrown out of balance by the addition of the secondary fuel bowl external vent.

6. The calibration of the secondary section of the carburetor was revised to compensate for the reduction in the metering forces. Refer to the specifications for the proper metering jets.

IN-CHASSIS ADJUSTMENT

Automatic Choke. Use the following procedure to adjust the magnet and bracket assembly:

1. Rotate the choke thermostat coil housing 90° in the "rich" direction (counterclockwise).

2. Adjust the bellcrank lever, if necessary, to obtain 0.050 inch between the top edge of the fast idle cam and the cast stop boss on the rear of the choke housing.

3. Place a 0.010-inch feeler gauge between the top rear straight edge of the choke plate and the air horn casting.

4. Loosen the attaching screws and adjust the magnet and bracket assembly so that it just contacts the choke plate. Tighten the attaching screws and remove the feeler gauge. Set the choke thermostat coil housing to the proper index mark. All other procedures for adjusting the automatic choke are the same as outlined in Part 3-1 of the 1962 Thunderbird Shop Manual.

Fuel Level Float Adjustment. On carburetors equipped with Viton-tipped fuel inlet needles, the dry float fuel level settings should be used as a guide only, and a final check and adjustment of the wet fuel level should be made as follows:

1. Operate the engine for 30 minutes at 1200 rpm to normalize engine temperatures, and place vehicle on a flat surface as near level as possible. Stop the engine.

2. Remove the air cleaner assembly, carburetor air horn assembly, and gasket.

3. Temporarily place the air horn gasket in position on the carburetor main body and start the engine. Let the engine idle for several minutes; then remove the air horn gasket.

4. While the engine is idling, use a standard depth scale to measure the vertical distance from the top ma-

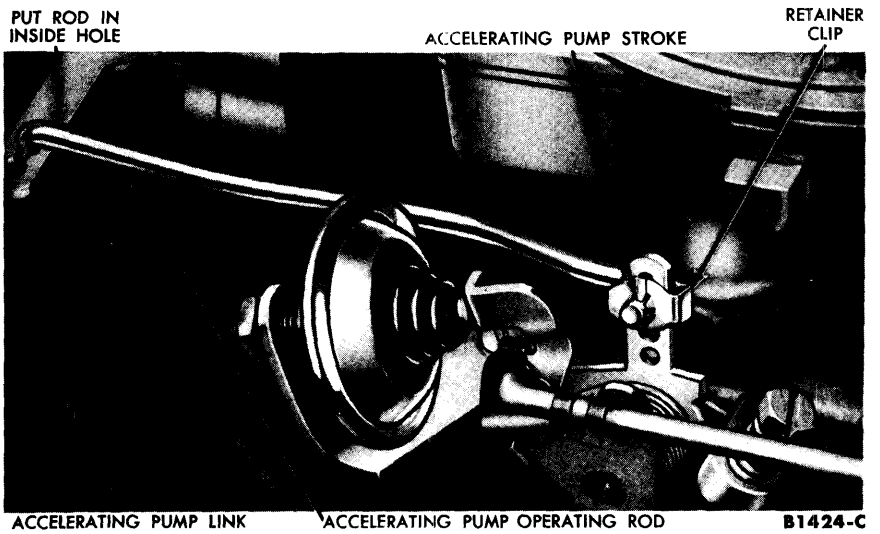

FIG. 4—Accelerating Pump Stroke Adjustment

chined surface of the carburetor main body to the level of the fuel in the fuel bowl. The measurement must be made at least 1/4 inch from any vertical surface to assure an accurate reading because the surface of the fuel is concave (higher at the edges than in the center). Care must be exercised to measure the fuel level at the point of contact with the fuel. Refer to the specifications for the correct fuel level (wet) setting.

5. **If any adjustment is required, stop the engine to minimize the hazard of fire due to fuel spray when the float setting is disturbed.** To adjust the fuel level, bend the float tab contacting the fuel inlet valve upward, in relation to the original position, to raise the fuel level and downward to lower it. Each time an adjustment is made to the float tab to alter the fuel level the engine must be started and permitted to idle for at least three (3) minutes to stabilize the fuel level. Check the fuel level after each adjustment until the specified level is achieved.

6. Install a new air horn gasket and the carburetor air horn assembly.

7. Check the engine idle speed and idle fuel mixture and adjust as required.

8. Install the air cleaner assembly.

Accelerating Pump Stroke. The over-travel lever has 4 holes and the accelerating pump link has 2 holes to control the accelerating pump stroke for different engine applications (Fig. 4).

For average ambient temperature operation (40° to 80°F), place the accelerator pump operating rod in the No. 2 hole position of the over-travel lever (second hole from the throttle shaft). **To release the rod from the retainer clip, press the tab end of the clip toward the rod, and at the same time press the rod away from the clip until it is disengaged.**

For low ambient temperature operation (below 40°F), place the pump operating rod in the No. 3 hole position of the over-travel lever (third hole from the throttle shaft).

For extremely low ambient temperature operation (−15°F and below), the pump operating rod may be placed in the No. 4 hole position to suit individual operating conditions.

For high ambient temperature operation (above 80°F and/or above 5000 feet altitude), the pump operating rod may be placed in the No. 1 hole position of the over-travel lever (hole closest to the throttle shaft) to suit individual operating conditions.

The correct position for the pump operating rod at the accelerator pump plunger lever, for all operating conditions, is in the inboard hole (hole closest to the pump plunger).

HOLLEY DUAL CARBURETORS

IN-CHASSIS ADJUSTMENTS

Idle Fuel Mixture Adjustment

1. Operate the engine until it reaches normal operating temperature. If the car is equipped with an air conditioner, the engine must be operated at least 20 minutes. **All engine speed and idle fuel mixture adjustments must be made with the air cleaner installed.**

2. Establish an initial idle fuel mixture adjustment by turning both idle mixture screws on each carburetor (Fig. 5) inward until they are lightly seated. Then turn the idle mixture screws on each secondary carburetor (Fig. 6) outward 3/4 turns, and turn the primary carburetor idle mixture screws outward one full turn.

3. Install an engine speed tachometer. Start the engine; move the transmission selector lever to the DRIVE (D1) position, and set the parking brake. Adjust the engine idle rpm to 575-600 rpm by turning the idle speed adjusting screw (Fig. 5) on the primary carburetor only.

4. Turn the primary carburetor idle mixture screws inward until the engine begins to run rough from the lean mixture. Turn the mixture screws outward until the engine be-

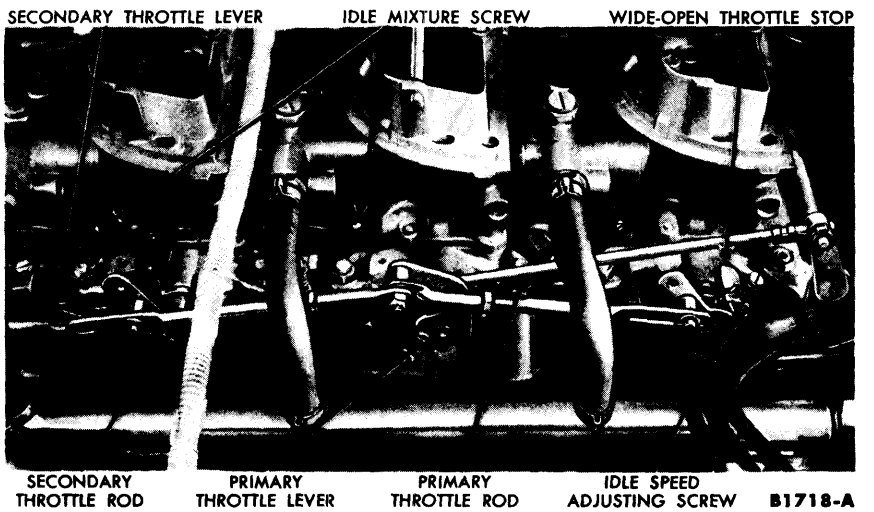

FIG. 5—390 6-V Carburetor Throttle Linkage Installation

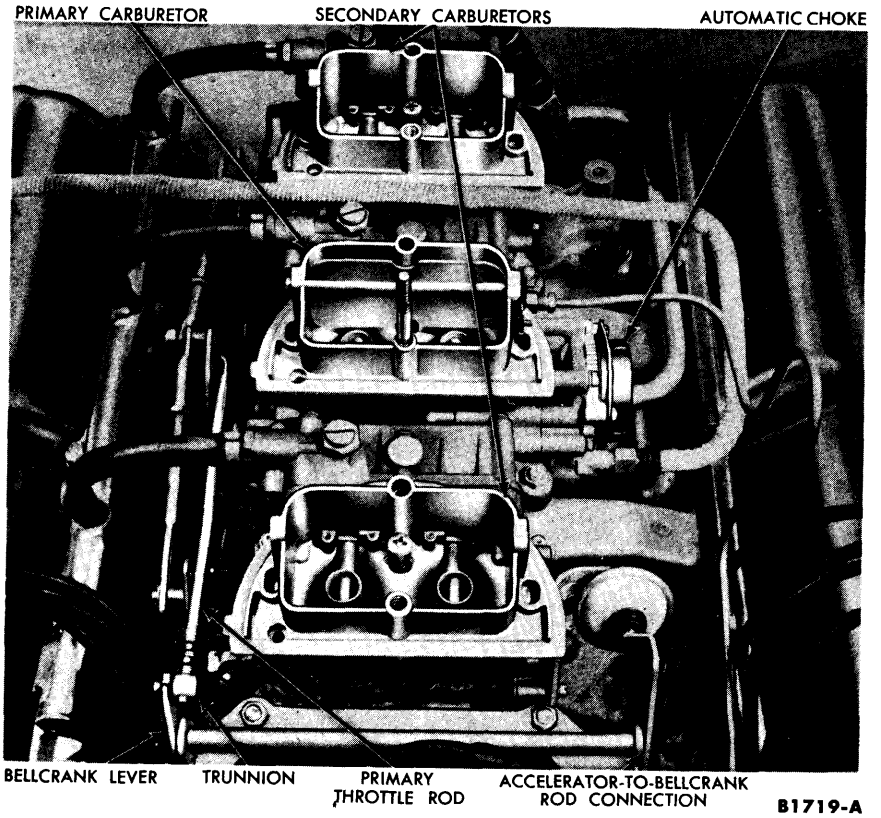

FIG. 6—390 6-V Carburetor Installation

gins to roll from the rich mixture. Turn the screws inward until the engine runs smoothly and evenly. Always favor a slightly "rich" idle fuel mixture.

5. Repeat this procedure (step 4) to adjust the idle mixture screws on the front secondary carburetor.

6. Following the same procedure, adjust the idle mixture screws on the rear secondary carburetor. **The right and left idle mixture screws on any one carburetor should be open an equal amount, within 1/8 turn, after the final adjustment.**

7. With the engine operating at idle and the transmission in Drive range, check the engine speed. The tachometer should indicate 575-600 engine rpm.

8. If the engine still does not idle properly, due to a too rich mixture, i.e., idle mixture screws are seated, it may be caused by improper initial idle speed setting of the secondary carburetors. Also, if the throttle levers are not synchronized, it will be difficult to obtain a satisfactory idle adjustment.

Idle Speed Adjustment. All engine speed and idle fuel mixture adjustments must be made with the air cleaner installed and the engine at normal operating temperature.

1. Back off the idle speed adjusting screw (Fig. 5) on each secondary carburetor sufficiently to allow the throttle plates to seat in the throttle bores. Turn the idle speed screws inward until the screw end just touches the stop on the throttle lever; then turn it inward an additional 1/2 to 3/4 turns. **A minimum throttle opening is desired on the secondary throttle plates. The only requirement necessary is that the plates do not stick in the bores.**

2. Operate the engine for 30 minutes at 1200 rpm to normalize engine temperatures. Install an engine speed tachometer. Start the engine. Move the transmission selector lever to the DRIVE (D1) position, and set the parking brake. Adjust the engine idle rpm to 575-600 rpm by turning the idle speed adjusting screw on the primary carburetor only.

3. Set the fast idle speed (cold) with the engine at normal operating temperature. Align the high step on the fast idle cam with the adjusting screw (Fig. 7). Turn the screw inward to increase or outward to decrease the idle speed to obtain the specified rpm.

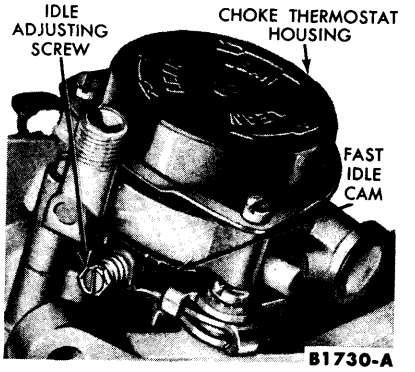

FIG. 7—Fast Idle Speed Adjustment

Throttle Lever Synchronization. If the throttle linkage is disassembled or it is improperly synchronized, the following procedure is recommended for synchronizing the throttle levers on the three carburetors.

1. Insert a 1/8-inch diameter rod through the gauging holes (Fig. 8) provided in the bellcrank lever and mounting bracket on the left side of the bellcrank assembly. This locks the lever in the gauging (closed throttle) position.

2. Disconnect the secondary throttle rods at each secondary carburetor throttle lever (Fig. 5). Disconnect the primary throttle rod at the bellcrank lever.

3. Loosen the lock nut and adjust the length of the front secondary carburetor throttle rod so that, when installed, the throttle lever of the front secondary carburetor will be completely closed when the primary throttle lever is closed against the idle speed adjusting screw stop (normal idle position).

4. Adjust the length of the rear secondary carburetor throttle rod in the same manner.

5. Install the secondary throttle rods on the secondary throttle levers with the spacer washers and retainers. Tighten the lock nuts to secure the adjustment.

6. With the primary throttle lever against the idle stop, adjust the length of the primary throttle rod (Fig. 6), so that the trunnion will just engage in the hole in the bellcrank lever. Install the rod retainer clip.

7. Adjust the anti-stall dashpot clearance.

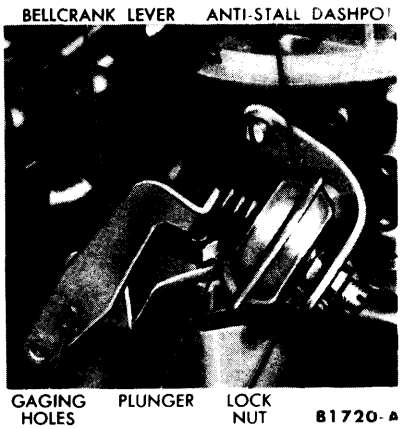

FIG. 8—Anti-Stall Dashpot Adjustment

Anti-Stall Dashpot Adjustment

1. Adjust the engine idle speed and idle fuel mixture, and synchronize the carburetor linkage. Operate the engine until it reaches normal operating temperature.

2. Lock the throttle linkage in the gauging position by inserting a 1/8-inch diameter rod through the gauging holes provided in the bellcrank lever and mounting bracket on the left side of the bellcrank assembly (Fig. 8).

3. Loosen the lock nut and turn the anti-stall dashpot screw in or away from the bellcrank lever. Fully depress the dashpot plunger with a screwdriver blade, and adjust the clearance between the plunger and bellcrank lever to 1/8-3/16 inch. Tighten the locknut and remove the 1/8-inch rod from the gauge holes.

Automatic Choke Adjustment. The automatic choke has an adjustment to control its reaction to engine temperature. By loosening the three screws that retain the choke thermostat housing (Fig.7), it can be turned to alter the thermostatic spring adjustment. Turning the housing in a counterclockwise direction provides a richer mixture, and conversely a leaner mixture is obtained by turning the housing in a clockwise direction as indicated by the arrows on the housing. Refer to the specifications for the proper setting.

Accelerating Pump Adjustment. With the throttle lever (Fig. 9) held in the wide-open-throttle position and the accelerating pump arm fully depressed (manually), there should be 0.015-inch clearance between the screw head and the pump arm. Turn the adjusting screw into the screw head to increase the clearance and outward to decrease the clearance. One-half turn of the screw equals approximately 0.015 inch.

To satisfy acceleration requirements in various climates, the accelerating pump cam can be placed in either of two positions. Aligning the top hole of the cam with the top hole of the throttle lever gives the shortest stroke which is recommended for warm weather or average conditions. Aligning the cam bottom hole with the lever bottom hole gives the longest stroke which is recommended for cold weather operation.

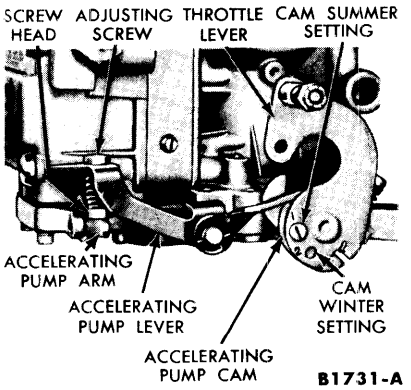

FIG. 9—Accelerating Pump Adjustment

Fuel Level Check. Position the car on a level floor. Be sure the fuel pump pressure is within specifications. Operate the engine for 30 minutes at 1200 rpm until normal operating temperature has been reached. Place a suitable container below the fuel level sight plug to collect any spill-over of fuel.

With the engine stopped, remove the fuel level sight plug and gasket and check the fuel level (Fig. 10). The fuel level within the bowl should be at the lower edge of the sight plug opening ±1/16 inch.

If the fuel level is satisfactory, install the sight plug. Do not install the air cleaner at this time.

If the fuel level is too high, drain the fuel bowl and refill it and check it again before altering the float setting. This will eliminate the possibility of foreign material causing a temporary flooding condition. To drain the fuel bowl, remove one lower retaining bolt from the fuel bowl and drain the fuel into a suitable container. Install the bolt and start the engine to fill the fuel bowl. After the fuel level has stabilized, stop the engine and check the fuel level.

Float Adjustment

1. If the fuel level is too high, it should first be lowered below specifications and then raised until it is just at the lower edge of the sight plug opening. If the fuel level is too low, it is only necessary to raise it to the specified level; thus omit steps 3 and 4 of this procedure.

2. **With the engine stopped,** loosen the lock screw on top of the fuel bowl just enough to allow rotation of the adjusting nut underneath (Fig. 10). **Do not loosen the lock screw or attempt to adjust the fuel level with the engine running because the pressure in the line will spray fuel out and present a fire hazard.**

3. Turn the adjusting nut approximately ½ turn in to lower the fuel level below specifications (1/6 turn of the adjusting nut, depending on the direction of rotation, will raise or lower the float assembly at the fuel level sight plug opening 3/64 inch).

4. Tighten the lock screw. Start the engine. After the fuel level has stabilized, stop the engine and check the level at the sight plug opening. The fuel level should be below specified limits. If it is not, repeat step 3, turning the adjusting nut an additional amount sufficient to lower the fuel below the specified level.

5. Loosen the lock screw and turn the adjusting nut out in increments of 1/6 turn or less until the correct fuel level is achieved. After each adjustment, tighten the lock screw, and then start the engine and stabilize the fuel level. Check the fuel level

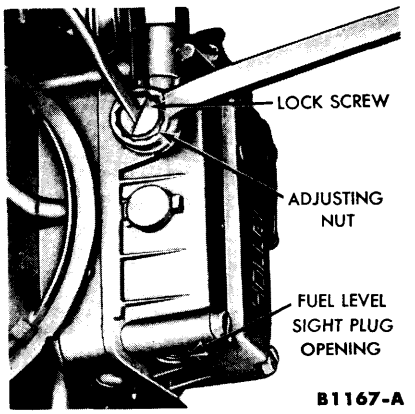

FIG. 10—Fuel Level Adjustment

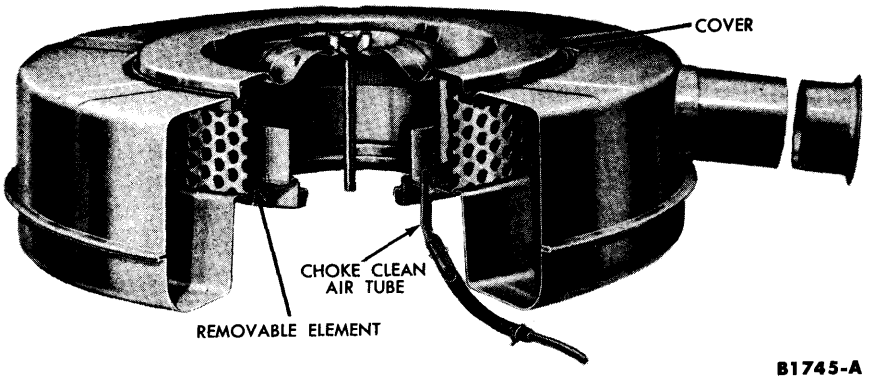

FIG. 11—Air Cleaner Assembly

at the sight plug opening. Install the sight plug and gasket.

6. Install the air cleaner. Check and adjust the idle fuel mixture and idle speed as necessary.

AIR CLEANER (Part 3-1)

The engine is equipped with a dry-type air cleaner that has a replaceable cellulose fiber filtering element (Fig. 11). The air from the engine compartment enters the air cleaner through the opening on the side and passes through the filter element. The filtered air is deflected down into the carburetor. Dust particles are trapped in the filter element as the air rushes through it. A tube attached to the filtered air chamber is connected to the automatic choke heat chamber in the right exhaust manifold to supply clean air to the automatic choke.

MAINTENANCE

Refer to Group 12 for the recommended maintenance mileage interval for cleaning and replacement of air cleaner elements.

REMOVAL

1. Remove the air cleaner wing nut. Disconnect the choke clean air tube, and lift the air cleaner off the carburetor.

2. Remove the cover and lift the element out of the air cleaner body.

INSTALLATION

1. Place the air cleaner body on the carburetor so that the word "FRONT" faces the front of the car. Connect the choke clean air tube to the air cleaner.

2. Place the element in the air cleaner body. Install the cover.

FUEL PUMP (Part 3-3)

The 1963 Carter design fuel pump is basically the same as the 1962 pump except for incorporation of a horizontal cross vent system in place of the vertical passage, increased diameter internal fuel passages, and pressure leak-down bleeds in the pump valves. In addition, the pump will incorporate the long-life, disposable fuel filter element (Fig. 12).

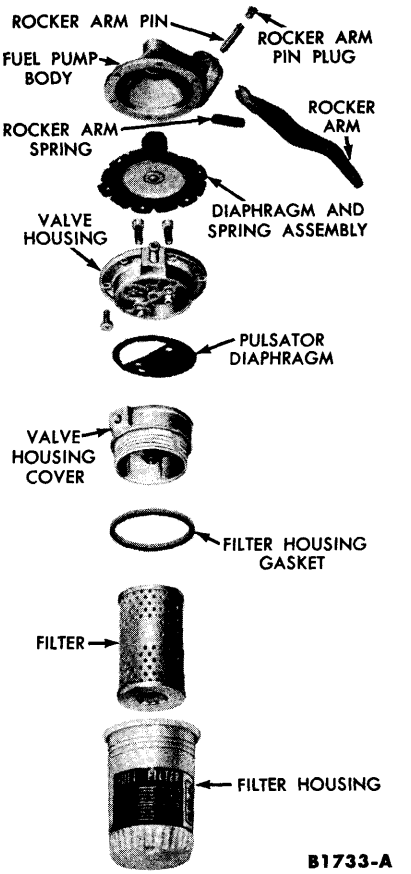

FIG. 12—Fuel Pump Asssembly

GROUP 4—COOLING SYSTEM

The 1963 maintenance recommendations are in Group 12 and the 1963 specifications are in Group 13 of this manual.

All the service procedures outlined in Group 4 of the 1962 Shop Manual remain the same with the following exceptions.

THERMOSTAT

Only one type of thermostat (poppet-type) is being used in the 1963 Thunderbirds. For replacement instructions, refer to "Thermostat," page 4-4, 1962 Shop Manual.

THERMOSTAT TEST

Remove the thermostat and immerse it in boiling water. Replace the thermostat if it does not open more than 1/4 inch. If the problem being investigated is insufficient heat, the thermostat should be checked for leakage. This may be done by holding the thermostat up to a lighted background. Light leakage around the thermostat valve (thermostat at room temperature) is unacceptable and the thermostat should be replaced. It is possible, on some thermostats, that a slight leakage of light at one or two locations on the perimeter of the valve may be detected. This should be considered normal.

FAN BELTS

REMOVAL

1. Loosen the power steering pump bracket at the water pump and remove the drive belt.

On a car with an air conditioner, remove the compressor drive belt.

2. Loosen the alternator mounting bolts and the alternator adjusting arm

bolt. Move the alternator toward the engine. Remove the belts from the alternator and crankshaft pulleys and lift them over the fan.

INSTALLATION

1. Place the belts over the fan. Insert the belts in the water pump pulley, crankshaft pulley, and alternator pulley grooves. Adjust the belt tension to specifications.

2. On a car with an air conditioner, install and adjust the compressor drive belt to specifications.

3. Install the power steering pump drive belt and tighten the pump bracket to the water pump. Adjust the drive belt tension to specifications.

GROUP 5—CRUISE-O-MATIC TRANSMISSION

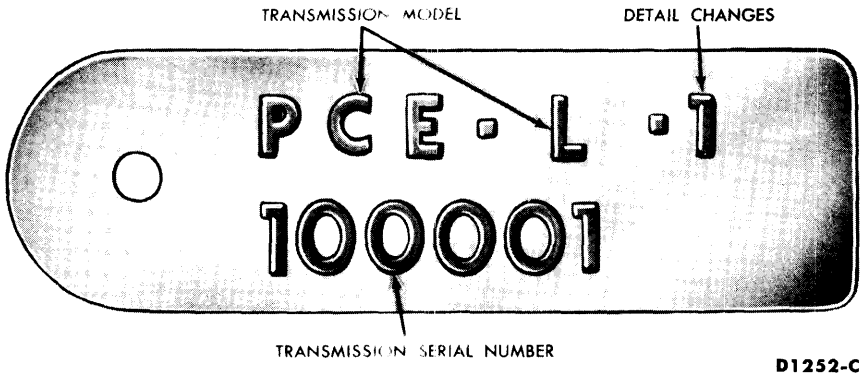

FIG. 13—Cruise-O-Matic Identification Tag

The 1963 maintenance recommendations are in Group 12 and the 1963 specifications are in Group 13 of this manual.

All of the procedures outlined in Group 5 of the 1962 Shop Manual remain the same with the following exceptions.

IDENTIFICATION TAG (Part 5-1)

The transmission identification tag (Fig. 13) is attached to the left side of the case. The first line on the tag indicates the model. The second line indicates the Serial No. and starts with 100001.

FRONT OIL PUMP SEAL (Part 5-5)

A new improved pump seal is being used in the 1963 models. The new seal is 1/8-inch narrower than the seal previously used. The seal is removed and installed in the same manner as the old type except for the tool. The existing tool (T59L-77837-A) can be reworked as shown in Fig. 14 to install the narrower seal or a new tool (T63L-77837-A) is available.

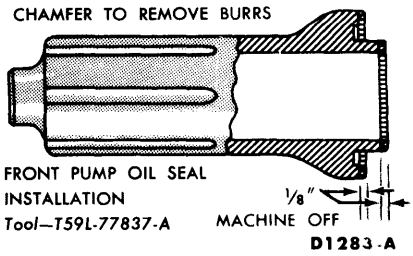

FIG. 14—Tool T59L-77837-A Rework Dimensions

NYLON-TYPE SPEEDOMETER DRIVE GEAR (Part 5-5)

A nylon speedometer drive gear replaces the steel drive gear previously used. If gear replacement is necessary, the old type steel gear may be used.

The nylon drive gear is a 0.004-0.010-inch shrink fit on the output shaft and can be removed or installed in the following manner.

1. Remove the output shaft from the transmission in the usual manner.

2. Remove the oil distributor tubes from the sleeve.

3. Remove the speedometer drive gear snap ring from the shaft.

4. Pry the oil delivery sleeve toward the rear of shaft with a hammer handle. Make certain to apply pressure on the governor counterweight, and not against the governor valve body (Fig. 15).

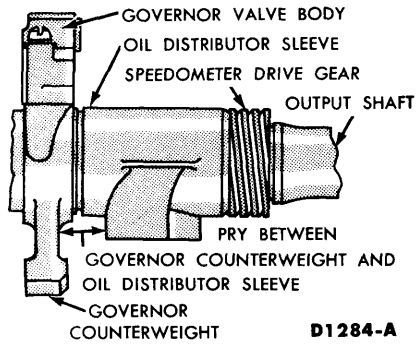

FIG. 15—Pressure Apply Point for Drive Gear Removal

5. Slide the oil delivery sleeve toward the front of the transmission.

6. Using a hammer and a small brass drift, tap the gear evenly and alternately (Fig. 16) to prevent cocking it on the shaft. Tap the gear gently to prevent damaging it.

7. To install the gear, dip it in transmission fluid and place it on an illuminated 100-watt light bulb.

8. Allow the gear to remain on the bulb for five minutes, then, turn it over and heat the other side for five minutes. This will heat the gear to approximately 180°F.

9. Make sure the lock ball is in

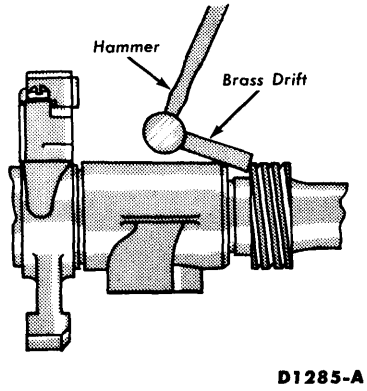

FIG. 16—Speedometer Drive Gear Removal

place on the shaft, then quickly slide the gear into place.

10. Install the speedometer drive gear snap ring on the output shaft.

11. Install the output shaft in the usual manner.

OUTPUT SHAFT THRUST WASHER (Part 5-5)

A new type needle bearing thrust washer is used in the 1963 Thunderbird transmission. A counterbore is provided in the rear pump to accommodate the thrust bearing race. Figure 17 shows the relative position of the thrust washer and race.

TORQUE CONVERTER (Part 5-6)

The 1963 converter has been modified to replace the sprag-type clutch with a roller-type clutch. Also, the bronze and aluminum thrust washers have been replaced with aluminum coated stamped thrust washers and flat steel retainers.

The design of the new thrust washers is such that a new longer locking rod (Tool T63P-7902-A) will be required for use with the existing converter clutch checking tool.

The checking procedure is the same as for previous model converters.

FRONT SERVO (Part 5-5)

The accumulator piston and related parts have been eliminated on the 1963 models. Servicing of the servo remains the same as in the 1962 manual with the exception of the eliminated parts shown in Figure 18.

CONVERTER HOUSING (Part 5-4)

To accommodate the addition of an 0.075-inch thick engine rear cover plate mounted between the transmission and engine, a new converter housing and converter assembly is used. The new converter housing will have the starter pilot eliminated. Piloting of the starter will be accomplished by the engine rear cover plate.

The new converter assembly will have longer flywheel mounting stud pads and a longer crankshaft pilot, in order to provide adequate piloting in the crankshaft and maintain the same converter to front pump relationship.

PARKING LINKAGE (Part 5-5)

Figure 19 illustrates the new type parking pawl linkage in the transmission. The control rod incorporates a compression spring to drive the toggle lift lever into the apply position.

The following parts have been revised to accommodate the new type linkage; manual shaft and lever, control valve detent lever, toggle lift lever, torsion rod and the lift lever shaft.

PLANETARY CLUTCH (Part 5-5)

A new roller-type planetary clutch has replaced the sprag-type clutch previously used. The new roller-type clutch requires a new planet carrier with a cam-type clutch race (Fig. 20). In conjunction with the clutch and the planet carrier, a new type center support is used.

The roller clutch is installed in the same location, and functions in the same manner as the sprag-type clutch previously used. The original center support is chamfered at the rear of

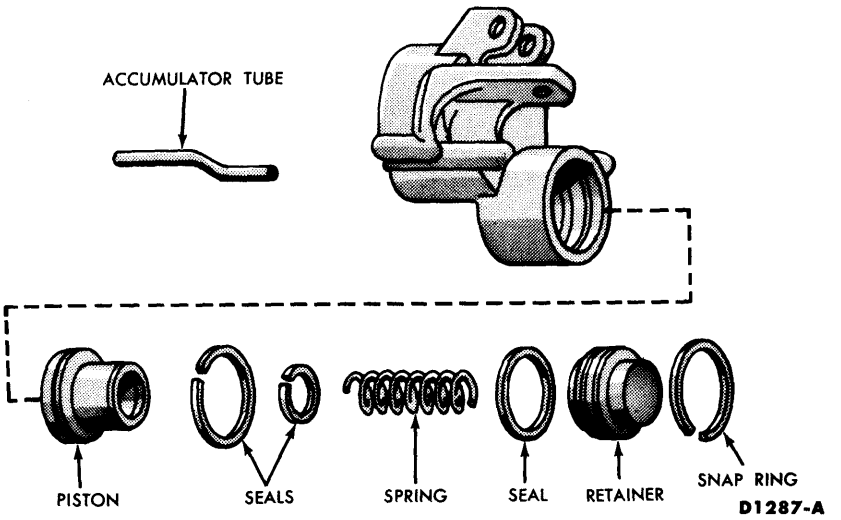

FIG. 18—Front Servo

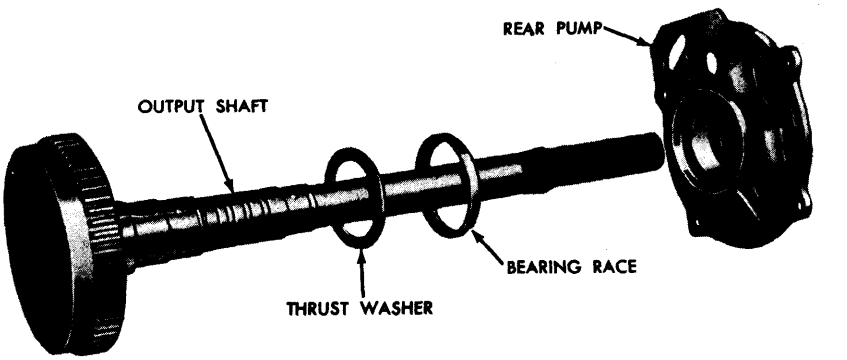

FIG. 17—Output Shaft Thrust Washer and Race

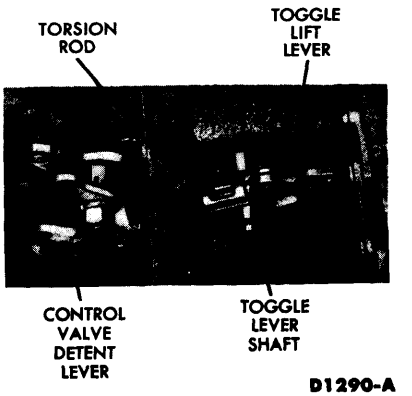

FIG. 19—Parking Linkage Installed

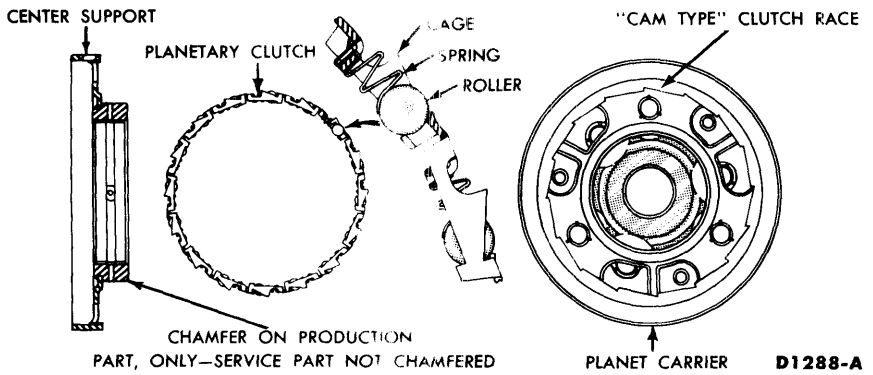

FIG. 20—Planetary Clutch, Planet Carrier and Center Support

the clutch race to accommodate the new type roller clutch only. The new service planetary support is not provided with a chamfer and can be used with the sprag-type clutch as well as the new roller clutch. The new chamfered planetary support cannot be used with the sprag-type clutch because the chamfer could reduce sprag contact area on the inner race, resulting in loss of capacity and cause premature clutch wear. The method of installing the roller-type clutch on the center support with a chamfered edge is different from a support with a square edge as detailed in the following procedure

INSTALLATION—Center Support with Chamfered Edge

1. Install the center support and the rear band in the case.

2. Install the primary sun gear rear thrust bearing race and the bearing in the planet carrier using petroleum jelly to retain them in place

3. Lubricate the bearing surface on the center support, the rollers of the planetary clutch and the cam race in the carrier with petroleum jelly.

4. Install the planetary clutch in the carrier (Fig. 21).

5. Carefully position the planet carrier on the center support. Move the carrier forward until the clutch rollers are felt to contact the bearing surface of the center support.

6. While applying forward pressure on the planet carrier, rotate it counterclockwise as viewed from the rear. This will cause the clutch rollers to roll toward the large opening end of the cams in the race, compressing the springs slightly, so that the rollers will ride up the chamfer on the planetary support and onto the inner race.

7. Push the planet carrier all the way forward.

8. Check the operation of the planetary clutch by rotating the carrier counterclockwise. It should rotate with a slight drag while rotating it counterclockwise (viewed from the rear) and it should lock up when attempting to rotate it in a clockwise direction.

INSTALLATION—Center Support with Square Edge

1. Install the center support and the rear band in the case.

2. Install the primary sun gear rear thrust bearing race and the bearing in the planet carrier using petroleum jelly to retain them in place.

3. Lubricate the bearing surface on the center support, the rollers of the planetary clutch and the cam race in the carrier with petroleum jelly.

4. Install the planetary clutch on the center support with the "saw-teeth" of the clutch cage pointing in the clockwise direction as viewed from the rear (Fig. 22). **Make sure that all rollers are in the cage.**

5. Position the planet carrier on the support so that the cams in the carrier engage the "saw-teeth" on the clutch cage.

6. Push the planet carrier forward until the rollers are felt to contact the surface of cam race.

7. While applying forward pressure on the carrier, rotate it counterclockwise as viewed from the rear. This will cause the rollers to roll toward the large opening end of the cams in the race, compressing the springs slightly, so that the roller will enter the cams.

8. Some rollers may become cocked preventing their entry into the outer race. These rollers must be

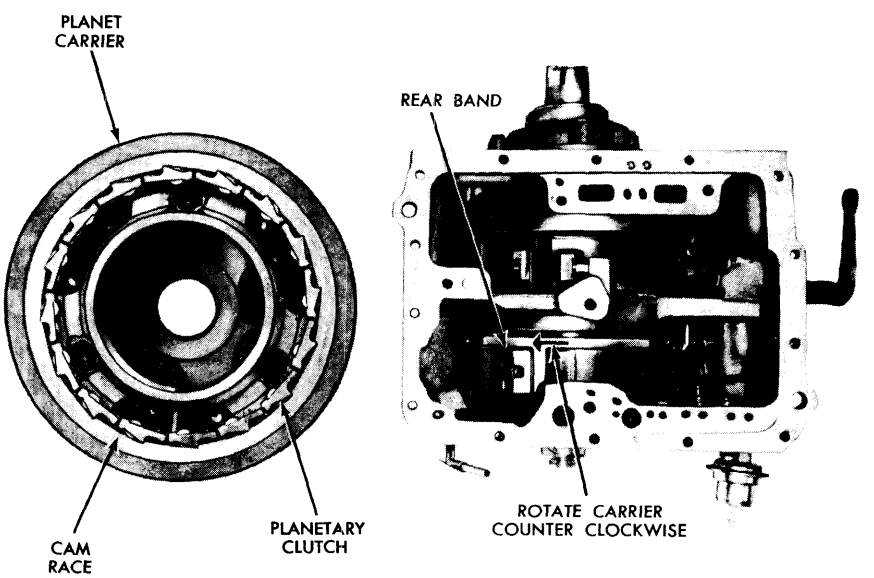

FIG. 21—Planetary Clutch Installed in Carrier

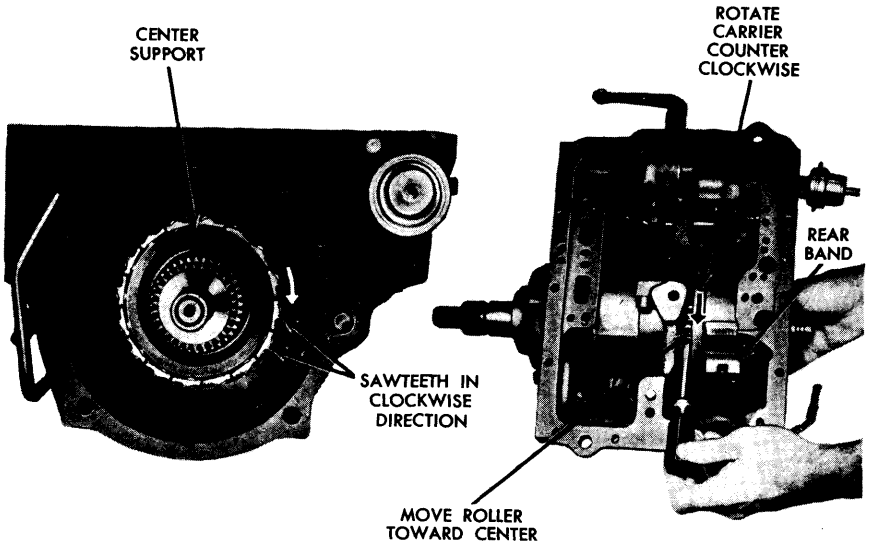

FIG. 22—Planetary Clutch Installed on Center Support

positioned individually with a small screwdriver by pushing the rear of the rollers toward the center of the transmission and into the cam race (Fig. 22). Keep pressure applied to the carrier at all times.

9. After all of the rollers have been started into the cam race, rotate the carrier counterclockwise while pushing it forward. Again, straighten any rollers or springs which still may be in a cocked position and prevent the carrier from sliding onto the support.

Make sure that all springs are entered into the cam race before pushing the carrier onto the roller clutch.

10. Push the carrier all the way forward and check the operation of the clutch by rotating it in a counterclockwise direction. The carrier should rotate counterclockwise with a slight drag and should lock up when attempting to rotate it in a clockwise direction.

GROUP 6—REAR AXLE AND DRIVE LINE

The 1963 maintenance recommendations are in Group 12 and the 1963 specifications are in Group 13 of this manual.

All the service procedures outlined in Group 6 of the 1962 Shop Manual apply to the 1963 Thunderbird with the following exceptions.

REAR AXLE OVERHAUL (Part 6-2)

DISASSEMBLY OF 4-PINION DIFFERENTIAL CASE

1. Remove the differential case from the carrier and remove the bearings and drive gear from the case as outlined in steps 1 through 4 under "Disassembly of Conventional Differential Carrier," page 6-8 of the 1962 manual.

2. Drive out the three differential pinion shaft retainers with a drift, and separate the 2-piece differential case.

3. With a brass drift, drive out the long pinion shaft. Drive from the end opposite the retainer hole (Fig. 23).

4. Remove the two short pinion shafts. Using a drift, drive each shaft from the center outward.

5. Lift out the center block, then remove the gears and thrust washers.

6. To disassemble the remaining carrier parts, follow steps 7 through 13 on page 6-9 of the 1962 manual.

ASSEMBLY OF 4-PINION DIFFERENTIAL CASE

Lubricate all parts thoroughly with axle lubricant during assembly.

1. Place a thrust washer and side gear in the differential case bore.

2. Install the four thrust washers, and place the pinion gears on the side gear. Align the washers and pinion gears with the pinion shaft holes in the case (Fig. 23).

3. Install the center block so that its four small diameter holes are aligned with the holes in the pinion gears and in the case.

4. With a brass drift, drive in the two short pinion shafts from the outside of the case (Fig. 23). **Be sure to align the shaft retainer holes as each shaft is being driven into place.**

5. Drive the long pinion shaft into place from the retainer hole end of the case being sure to align the retainer hole in the shaft with that in the case.

6. Place the second side gear and

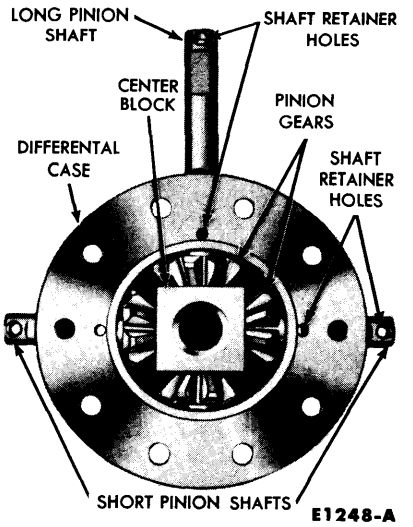

FIG. 23—Four-Pinion Differential

thrust washer on top of the four pinion gears, then install the differential case cover so that the three shaft retainer holes in the cover are aligned with their corresponding holes in the case.

7. Install the three shaft retainer pins with a drift. A pinion or axle shaft spline can be inserted in the side gear spline to check for free rotation of the differential gears.

8. **Fill differential case with axle lubricant.**

9. Insert two 7/16 (N.F.) bolts 2-inches long through the differential flange, and thread them 3 or 4 turns into the drive gear as a guide in aligning the drive gear bolt holes. Press or tap the drive gear into position.

10. Install and tighten the drive gear bolts and washers evenly, and torque them alternately across the gear to specifications.

11. If the differential bearings have been removed, press them on as shown in Fig. 24.

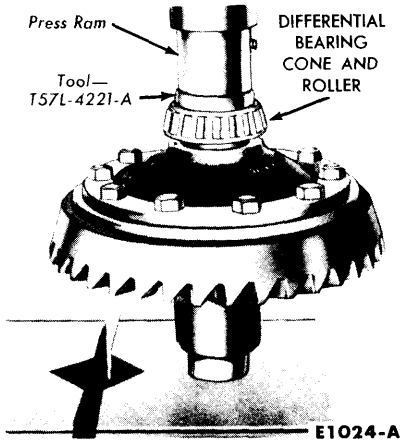

FIG. 24—Differential Bearing Installation

GROUP 7—STEERING

The 1963 maintenance recommendations are in Group 12 and the 1963 specifications are in Group 13 of this manual.

All the service procedures outlined in Group 7 of the 1962 Shop Manual apply to the 1963 Thunderbird with the following exceptions.

REPAIR (Part 7-2)

STEERING GEAR REMOVAL AND INSTALLATION

1. Disconnect the pressure line and the return line from the steering gear housing. Plug the openings and cap the lines.

2. Remove the bolt that locks the flex joint clamp to the steering gear worm shaft (Fig. 25).

3. Raise the car and disconnect the sector shaft (pitman) arm from the sector shaft, using the tool shown in Fig. 26.

4. Remove the steering gear mounting bolts (Fig. 27), and pull the steering gear assembly out of the flex joint.

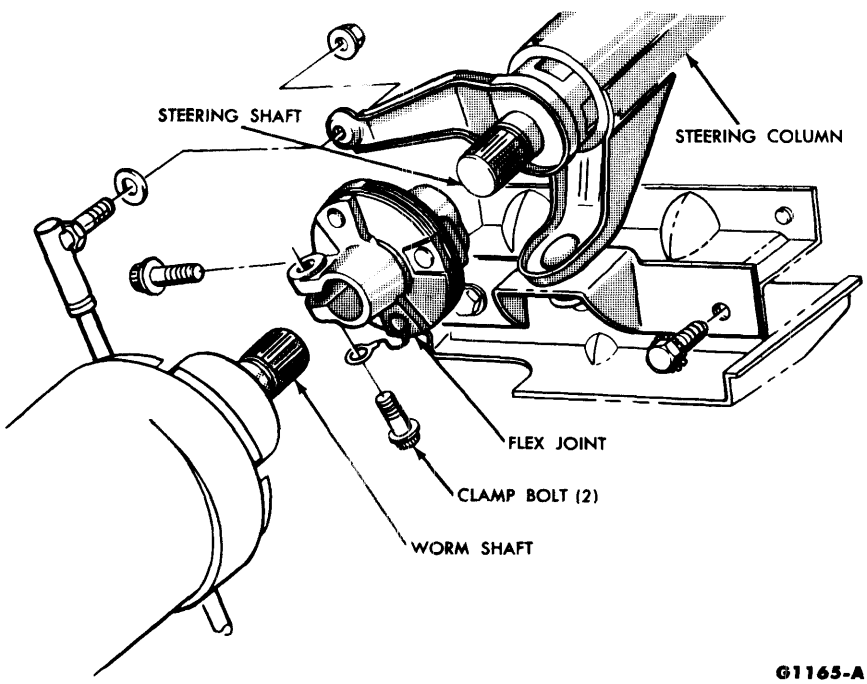

FIG. 25—Steering Column and Shaft-to-Steering Gear Connections

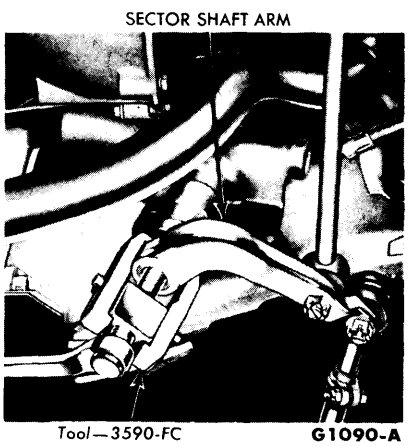

FIG. 26—Sector Shaft Arm Removal

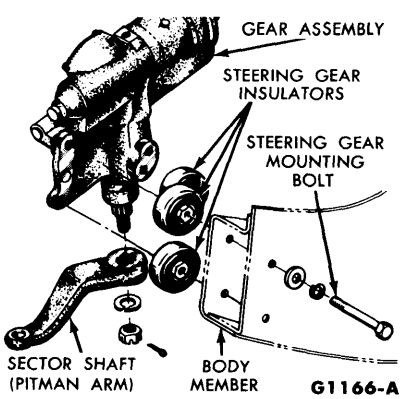

FIG. 27—Steering Gear Mountings

5. If a new gear is to be installed, transfer the insulator spacers from the old gear to the replacement gear (Fig. 27). Make sure the sector shaft and worm shaft are centered. To center the gear, turn the worm shaft until either stop within the gear is reached; then turn the worm shaft back approximately two turns.

6. Insert the worm shaft into the flex joint, position the steering gear to the underbody member, and install the mounting bolts (Fig. 27). Torque the mounting bolts to specifications.

7. After positioning the front wheels straight ahead, position the pitman arm on the sector shaft. Install the lock washer and nut and torque to specifications.

8. Lower the car, remove the plugs and caps, and connect the pressure and return lines to the steering gear housing.

9. Install the ground wire to the flex joint clamp bolt, and install the clamp bolt in the flex joint clamp to lock the worm shaft to the flex joint (Fig. 25).

10. With the engine idling, check for leaks by twice cycling the steering wheel from stop to stop. **Do not hold the wheel against its stops.** Add the specified fluid to the reservoir as required.

11. If the gear has been overhauled, adjust the position of the valve spool as outlined in Part 7-1 of the 1962 manual.

STEERING GEAR OVERHAUL

The 1963 steering gear has two sector shaft seals and a spacer. Because of this change, the steering gear is disassembled and assembled as outlined in the 1962 manual with the following exceptions:

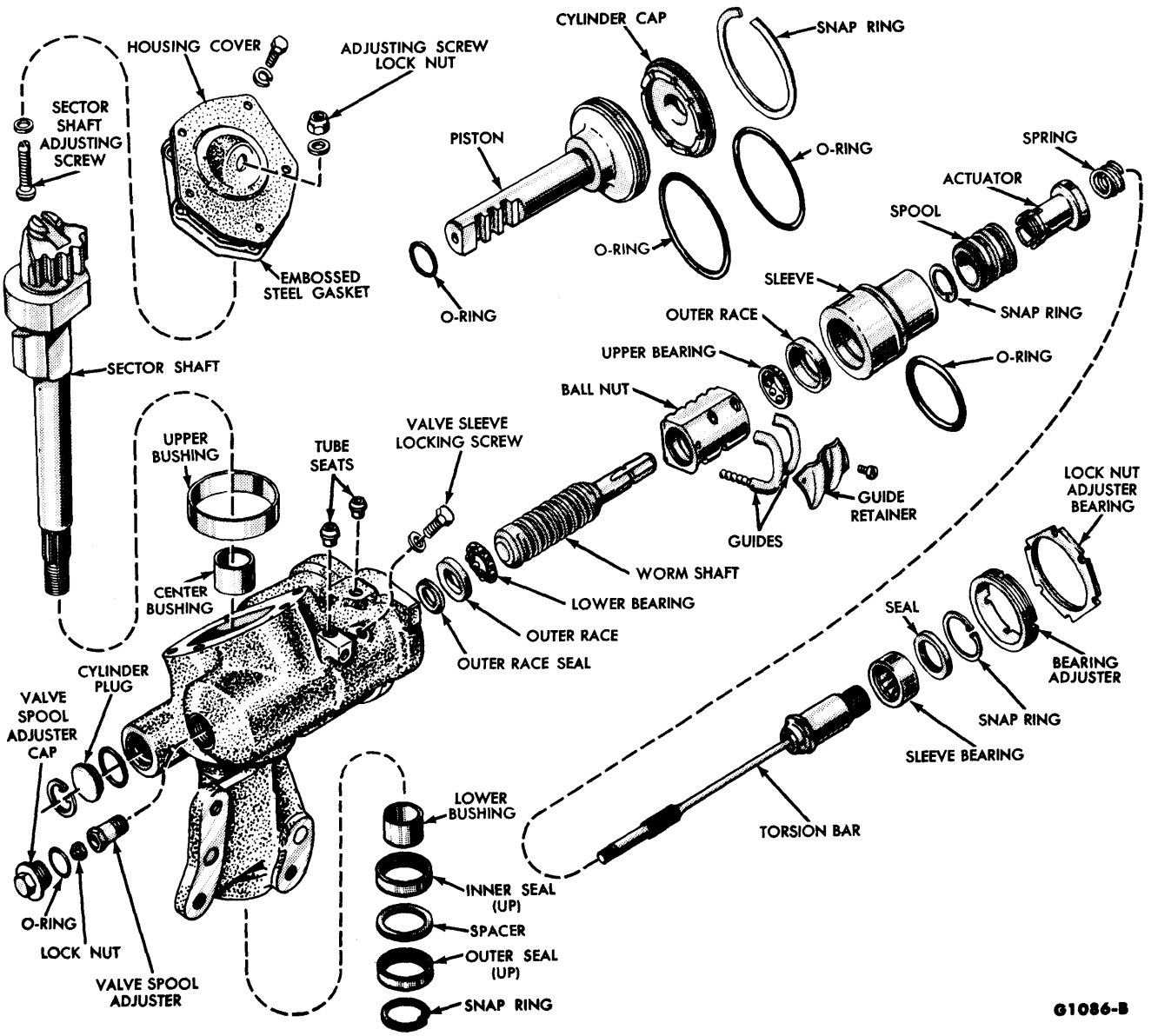

FIG. 28—Power Steering Gear Disassembled

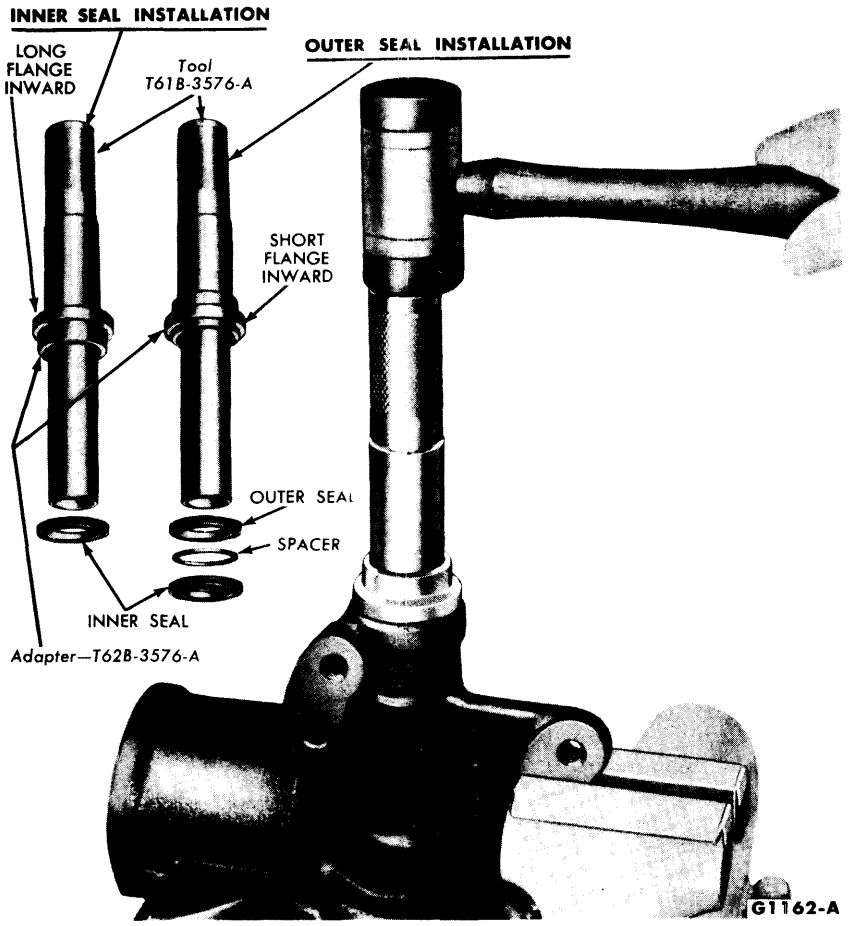

FIG. 29—Installing Sector Shaft Oil Seals

Disassembly. Remove the sector shaft oil seal retaining snap ring (Fig. 28). Remove the outer seal with tool 1175-AE, then remove the spacer. Remove the inner seal with tool 1175-AE.

Assembly. Position the inner sector shaft seal in the steering gear housing with the rubber sealing lip facing inward. Seat the seal in the housing with tool T61B-3576-A and adapter T62B-3576-A as shown in Fig. 29. **The long flange of the adapter should press against the seal.**

Install the metal spacer against the inner seal, then position the outer sector shaft seal with the sealing lip facing inward against the spacer. Seat the seal with the tool and adapter (Fig. 29). **The short flange of the adapter should press against the outer seal.**

Install the seat retaining snap ring. If the outer seal has blocked off the snap ring retaining grove in the casting, tap the tool and adapter against the snap ring so that the snap ring will seat into the groove of the casting.

GROUP 8—BRAKES AND SUSPENSION

The 1963 maintenance recommendations are in Group 12 and the 1963 specifications are in Group 13 of this manual.

All the service procedures outlined in Group 8 of the 1962 Shop Manual apply to the 1963 Thunderbird with the following exceptions.

FRONT AND REAR SUSPENSION (Part 8-3)

FRONT SHOCK ABSORBERS REPLACEMENT

1. Raise the front of the car, position a safety stand under the lower suspension arm, then lower the car slightly.

2. Disconnect the shock absorber lower mounting bracket from the upper arm by removing the three retaining nuts and washers (Figs. 30 and 31).

3. Open the hood, then remove the three shock absorber upper mounting plate retaining nuts and the two bolts that attach the mounting plate to the dash panel brace. Remove the shock absorber, mounting plate and lower bracket as an assembly.

4. Remove the shock absorber upper retaining nut washer and insulator, then separate the shock absorber from the upper mounting plate (Fig. 30).

5. Remove the retaining nut and bolt, and transfer the lower mounting bracket to the replacement shock absorber.

6. Install the bumper and shield, and the inner insulator on the shock absorber upper mounting stud. Assemble the upper mounting plate, then the outer insulator, washer and retaining nut to the mounting stud.

7. Position the shock absorber and upper mounting plate assembly through the top of the spring housing so that the three lower mounting studs enter the holes in the suspension upper arm. Install the lower retaining nuts on the studs.

8. Install the two bolts that attach the mounting plate to the dash panel brace. Install the three mounting plate retaining nuts.

9. Remove the safety stands, and lower the car.

FRONT SPRING AND/OR UPPER ARM REPLACEMENT

Removal

1. Raise the front of the car, position safety stands under the suspension lower arms, then lower the car slightly.

2. Remove the wheel and tire assembly. Disconnect the lower end of the shock absorber from the upper

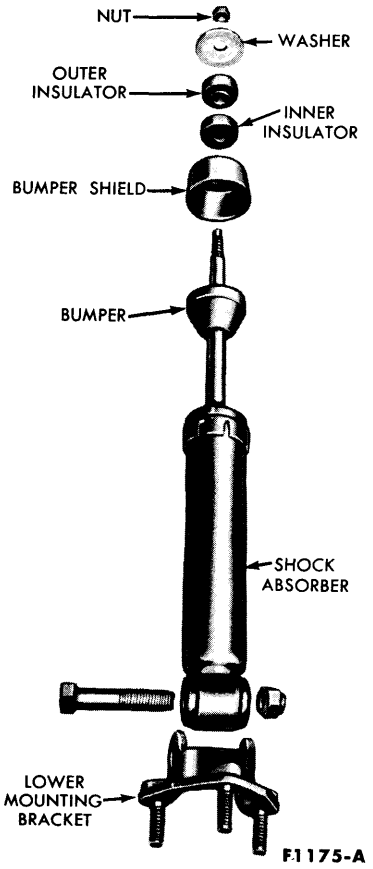

FIG. 30—Shock Absorber—Exploded View

arm by removing the three retaining nuts and washers.

3. Open the hood, then remove the three shock absorber upper mounting plate retaining nuts and the two bolts that attach the mounting plate to the dash panel brace. Remove the shock absorber and mounting plate as an assembly.

4. Raise the car slightly in order to lower the suspension upper arm. Install spring removal tool T63P-5310-A. Slide the tool bearing and upper plate over the shaft screw against the shaft nut. Insert the tool assembly through the upper opening in the spring housing so that the shaft screw goes through the top of the coil spring with the tool upper plate holes going over the studs as shown in Fig. 31.

5. From under the car, place the tool lower plate under the fourth coil from the bottom. Secure the plate to the coil by installing the tool retainer to the groove in the shaft screw (Fig. 32).

6. Insert a 1/2-inch square drive flex-handle wrench in the drive hole in the lower plate to prevent the tool and spring from turning (Fig. 32). While holding the tool, compress the spring by turning the tool shaft nut clockwise (Fig. 31).

7. Remove the cotter pin and loosen the upper ball joint stud nut. Place a box wrench over the lower end of tool T57P-3006-A and position the tool between the upper and lower ball joint studs. **The tool should seat firmly against the ends of both studs, and not against the lower stud nut.** It may be necessary to remove the cotter pin from the lower ball joint stud, if the cotter pin prevents the tool from seating on the lower stud.

8. Turn the wrench until both studs are under tension, then loosen the upper stud from the spindle by tapping the spindle near the upper stud with a hammer. **Do not loosen the stud with tool pressure alone.** Remove the upper ball joint stud nut and pull the upper arm free of the spindle.

9. Remove the two nuts and lock washers that retain the upper arm inner shaft to the chassis, then remove the arm. If only the upper arm is being removed, skip steps 10 and

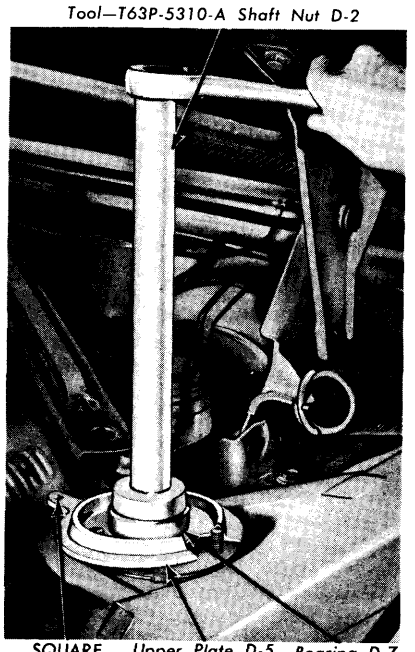

FIG. 31—Compressing or Releasing Spring—Upper View

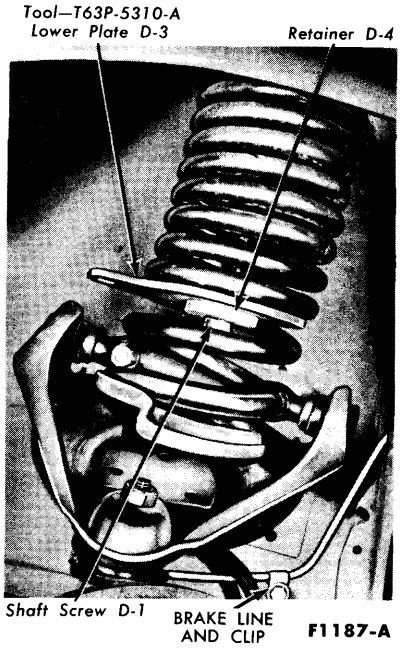

FIG. 32—Compressing or Releasing Spring—Lower View

11 following and steps 1 through 3 of the "Installation" procedure. Leave the spring compressed in the housing and proceed with steps 4 through 11 of the "Installation" procedure. If the spring is being removed, follow all the steps.

10. Remove the bolt that retains the clip and brake line to the chassis, move the brake line out of the way, then fully release the spring tension by turning the tool shaft nut counterclockwise (Fig. 31). **Be sure to hold the lower plate of the tool with the 1/2-inch square drive flex-handle wrench so that the tool will not turn or snap loose during spring release (Fig. 32).**

11. Remove the spring tool, then remove the spring from the car (Fig. 33).

Installation

1. Tape the rubber insulators to the upper and lower ends of the spring. Install the spring in its housing at the underside of the chassis.

2. Assemble spring tool T63P-5310-A to the car and the spring as described in steps 4 and 5 of the "Removal" procedure. Compress the spring by turning the tool shaft nut clockwise (Fig. 31). **Hold the tool lower plate from turning during**

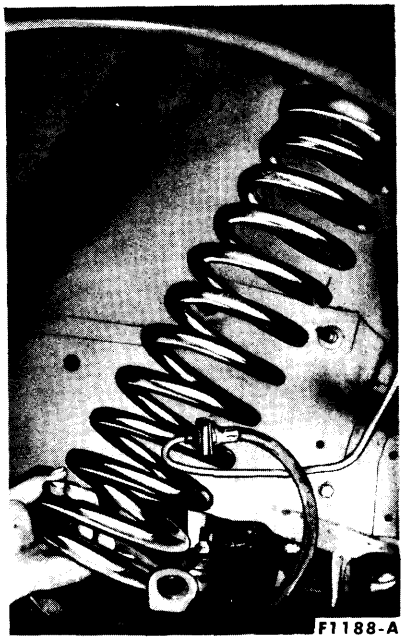

FIG. 33—Spring Removal or Installation

spring compression. Use the 1/2-inch square drive flex-handle wrench.

3. Position brake line and clip to the chassis and install the retaining bolt.

4. Position the upper arm and ball joint stud to the spring upper bore. Install the upper ball joint stud nut, torque to specifications and install the cotter pin.

5. Swing the upper arm into position and install the arm inner shaft-to-chassis retaining nuts. **Do not tighten.**

6. **Partially** release the spring tension by turning the shaft nut of tool T63P-5310-A counterclockwise (Fig. 31). As the spring is being released, pry the lower coil so that it will seat in the groove of the upper arm. **Hold the tool lower plate with the square drive wrench.**

7. Tighten the upper arm inner shaft-to-chassis retaining nuts to specifications. Release the spring completely, then remove the tool. **Hold the tool lower plate from turning during spring release. Use the 1/2-inch square drive flex-handle wrench.**

8. With the safety stands placed under the suspension lower arms, lower the car so as to compress the spring slightly.

9. Position the shock absorber and upper mounting plate assembly through the top of the spring housing so that the three lower mounting studs enter the holes in the suspension upper arm. Install the lower retaining nuts on the studs.

10. Install the two bolts that attach the mounting plate to the dash panel brace. Install the three mounting plate retaining nuts.

11. Install the wheel and tire assembly. Remove the safety stands.

POWER BRAKES (Part 8-5)

An atmospheric valve return spring has been added to the 1963 power booster unit. This spring is located between the atmospheric valve and the reaction load ring (Fig. 34).

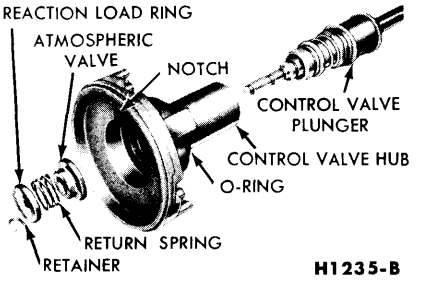

FIG. 34—Assembly of Control Valve Components to Valve Hub

When assembling the control valve components to the valve hub, proceed as follows:

1. Insert the control valve plunger into the control valve hub from the rear of the hub.

2. Assemble the atmospheric valve, the return spring and the reaction load ring to the valve plunger and hub.

3. Push the control valve plunger assembly forward and the reaction load ring backward against the return spring in order to install the retainer in the groove of the plunger.

A retainer has been added to hold the push rod components together. When assembling the push rod, proceed as follows:

Assemble the reaction cone and cushion ring to the push rod, and secure to the rod with the retainer. Install the push rod assembly to the valve hub so that the valve plunger indexes in the push rod.

GROUP 9—GENERATING AND STARTING SYSTEMS

The 1963 maintenance recommendations are in Group 12 and the 1963 specifications are in Group 13 of this manual.

All the service procedures outlined in Group 9 of the 1962 Shop Manual remain the same with the following exceptions.

GENERATING SYSTEM AND BATTERY (Part 9-1)

ALTERNATOR TESTS

The generator has been replaced with an alternator. Figure 35 shows the alternator charging circuit schematic. Figure 36 shows the alternator output connector block.

Alternator Output Test. When an alternator output test is conducted off the car, a test bench must be used. Follow the procedure given by the test bench manufacturer.

To test the output of the alternator on the car, proceed as follows:

1. Make the connections as shown in Fig. 37. Be sure that the field resistance control is at the OFF position at the start of this test.

2. Close the battery adapter switch. Start the engine, then open the battery adapter switch.

3. Increase the engine speed to exactly 2900 rpm.

4. Adjust the field resistance control until the voltmeter reads exactly 15 volts. Observe the ammeter reading. Add 5 amperes to this reading to obtain total alternator output. The 5 ampere factor represents the field current and the ignition system current, and must be added to the ammeter reading as these currents are not indicated on the ammeter. Any additional continuously operating equipment will also have to be taken into account.

If the battery was fully charged, it might not be possible to obtain maximum current output. If specified current is not obtained, make the fol-

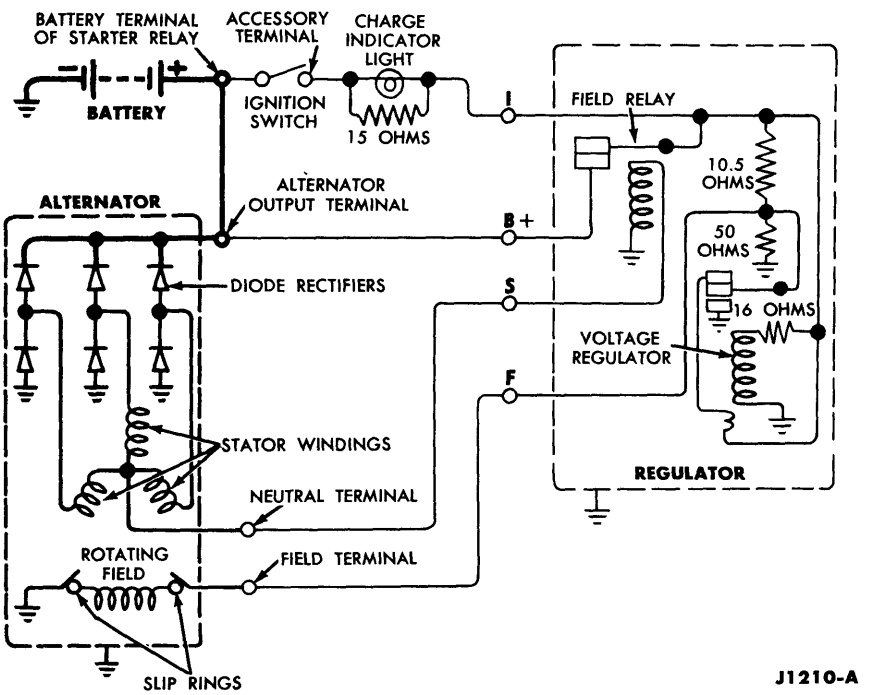

FIG. 35—Alternator System Schematic

lowing test before condemning the alternator:

5. Turn the field resistance control knob to the OFF position. Rotate the master control knob to the CURRENT REG. position. Maintain the engine speed at 2900 rpm.

6. Turn the field resistance control and the master control clockwise, maintaining a voltmeter reading of 15 volts maximum, until the field resistance control is at its maximum clockwise position.

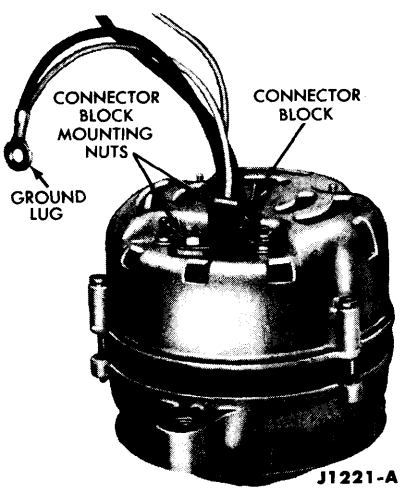

FIG. 36—Alternator Electrical Connections

7. Readjust the master control until the voltmeter reads exactly 15 volts. Observe the ammeter reading. Add 5 amperes to this reading to obtain total alternator output.

8. Stop the engine, return the field resistance control to the OFF position and disconnect the test equipment.

An output of 2 to 5 amperes below specifications indicates an open diode rectifier. An output of approximately 10 amperes below specifications indicates a shorted diode rectifier. An alternator with a shorted diode will usually whine, which will be most noticeable at idle speed.

A shorted **positive** diode may sometimes be accompanied by alternate flashing of the oil pressure and charge indicator lights when the ignition switch is off. The field relay contacts will also be closed and the battery will be discharging through the field to ground.

Under this condition, the instrument constant voltage regulator will receive power through the charge indicator light. The operating of the constant voltage regulator through the charge indicator light causes the alternate flashing of the lights.

Diode Test. To test the positive diodes, make the connections shown in Fig. 38. Contact the probe to each diode lead. Make sure that the tip of the probe is sharp and that it penetrates the varnish at the diode terminal.

To test the negative diodes, make the connections shown in Fig. 39. Follow the same procedure as for the positive diodes.

Good diodes will be indicated as on the meter in Figs. 38 and 39 (2 amps or more and readings alike within 2 scale divisions).

Field Open or Short Circuit Test. Make the connections as shown in Fig. 40. The current draw, as indicated by the ammeter, should be to specifications. If there is little or no current flow, the field has a high resistance or is open. A current flow considerably higher than that specified above, indicates shorted or grounded turns. If the test shows that the field is shorted and the field brush assembly is not at fault, the entire rotor must be replaced.

Field Relay Supply Voltage Test. The regulator field relay will close only if the voltage supplied by the neutral terminal of the alternator is sufficient to operate the relay. The wiring from the alternator neutral terminal to the relay S terminal also must be intact. The following test will show that both sufficient voltage is available and that the wiring is in good condition.

1. Remove the connector plug from the regulator, remove the regulator cover, then install the connector plug.

2. Connect the negative voltmeter lead to ground. Start the engine and operate it at 400 to 500 rpm.

3. Connect the positive voltmeter lead to a small screw driver. Touch the screw driver to the center rivet at the front of the regulator.

Use care to touch only the rivet or the rivet terminal so as not to short this point to ground or to the other nearby terminals. The voltmeter should indicate at least 6 volts, and the field relay contacts should be closed.

Low voltage at this point can be caused by a defective alternator or defective wiring.

ALTERNATOR REPLACEMENT

Removal

1. Disconnect a battery cable.

2. Loosen the shield front mounting bolt (Fig. 41).

3. Remove the cable bracket mount-

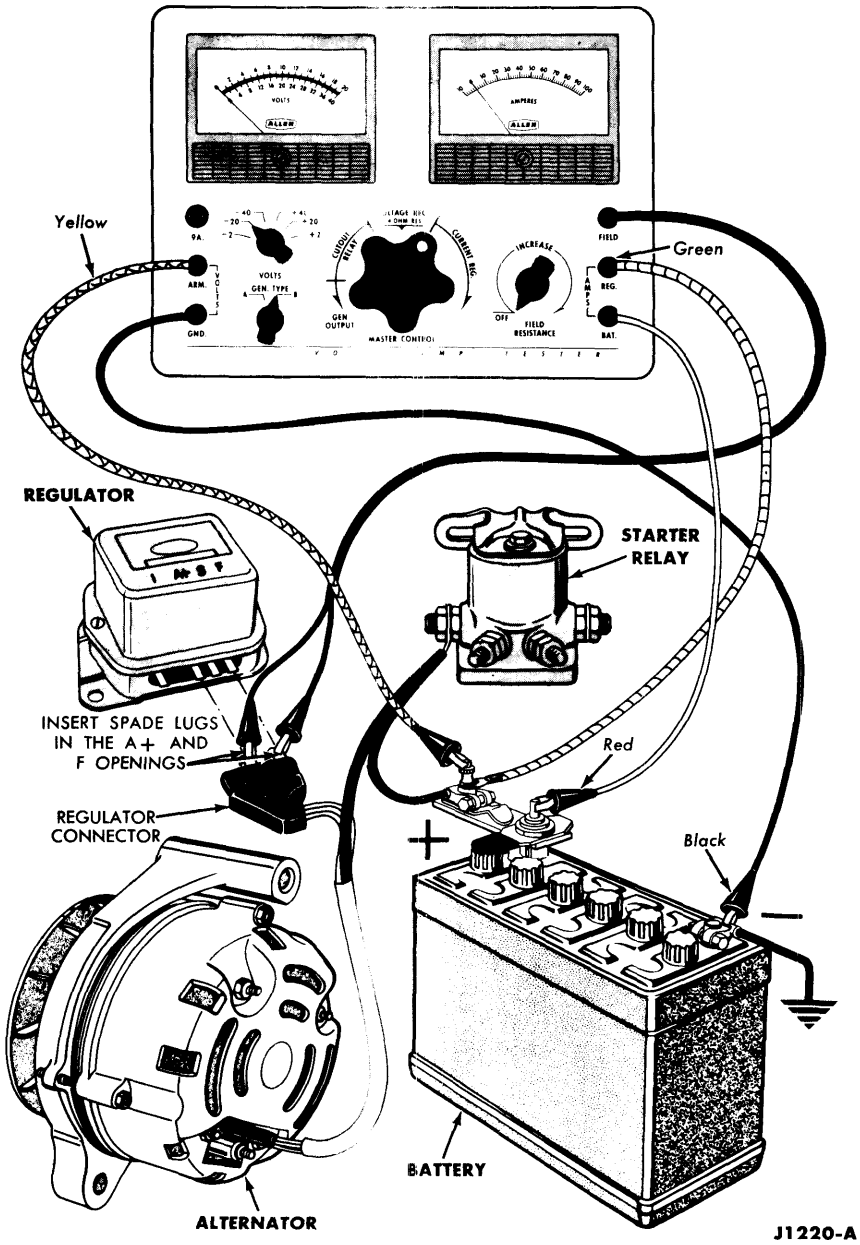

FIG. 37—Alternator Output Test

ing screw from the air deflector, and position the cables out of the way.

4. Remove the remaining shield mounting bolt and remove the shield.

5. Loosen the alternator mounting bolt and remove the adjustment arm to alternator bolt.

6. Disengage the alternator belt. Remove the alternator mounting bolt and spacer, disconnect the alternator cable and remove the alternator.

Installation

1. Attach the alternator cable. Position the alternator to the engine, and install the spacer and alternator mounting bolt finger-tight (Fig. 41).

2. Install the adjustment arm to alternator bolt.

3. Adjust the belt tension using tool T63L-8620-A. Apply pressure on the alternator front housing only. Tighten the adjusting bracket bolt and the mounting bolt.

4. Position the shield over the alternator and install the mounting bolts.

5. Position the cables and cable mounting brackets to the shield and install the mounting screw.

6. Connect the battery cable.

ALTERNATOR OVERHAUL

Disassembly

1. Mark both end housings with a scribe mark for assembly. Reach through a ventilation slot, raise both brushes off the slip rings, and install a short length of 1/8-inch rod or stiff wire through the hole in the rear end housing, to hold the brushes off the slip rings (Fig. 42).

2. Remove the three housing through bolts.

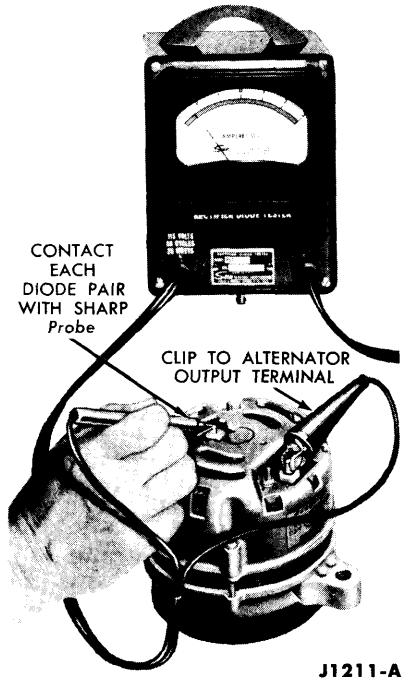

FIG. 38—Positive Diode Test

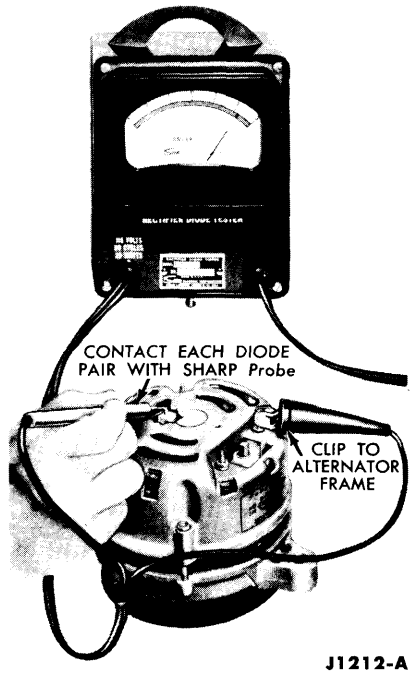

FIG. 39—Negative Diode Test

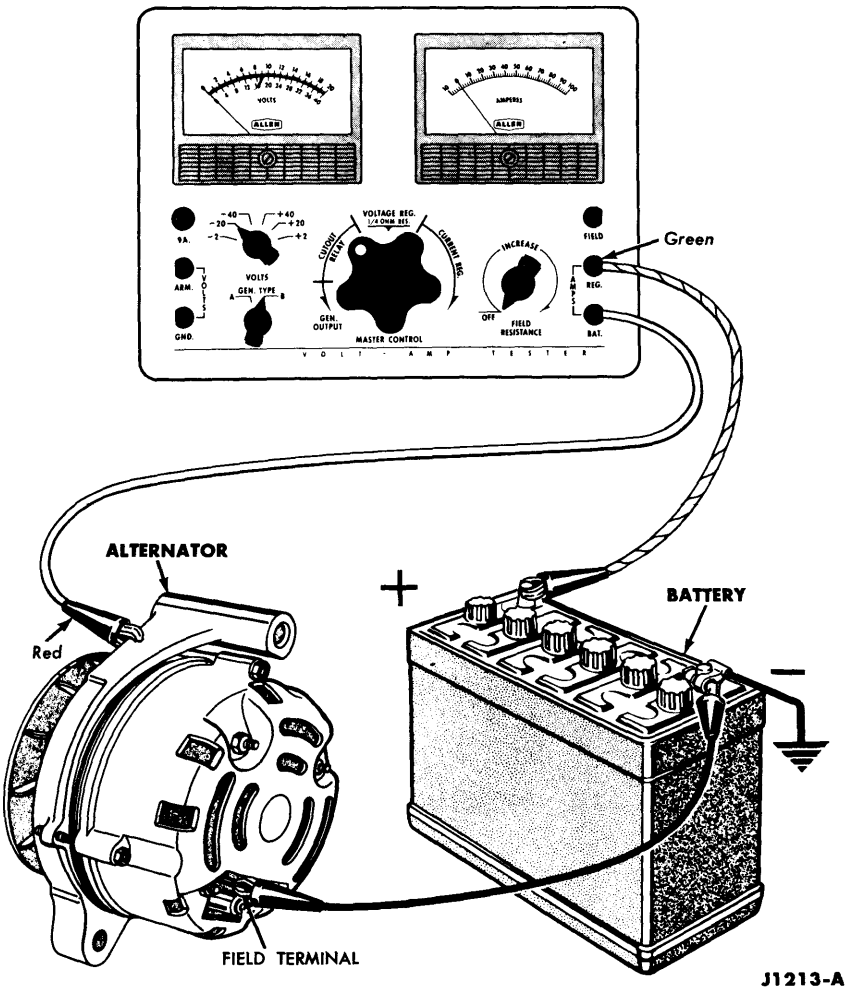

FIG. 40—Field Open or Short Circuit Test

3. Separate the front housing and rotor from the stator and rear housing. Make certain that the brushes do not contact the greasy rotor shaft.

4. Remove the nuts from the rectifier to rear housing mounting studs, and remove the rear housing. Remove the two spacer sleeves from the rectifier plate studs.

5. Press the bearing from the rear end housing (Fig. 43).

6. Remove the terminal spacer block assembly from the studs and unsolder the neutral wire from the spacer block neutral terminal.

7. If the brushes are being replaced, straighten the field brush terminal blade locking tabs, with a pair of pliers, and remove the terminal blade from the terminal spacer block. Remove the brushes and holders from the assembly.

8. If either diode plate is being replaced, carefully unsolder the leads from the diodes (Fig. 44). Use only a 100 watt soldering iron. Leave the soldering iron in contact with the diode terminals only long enough to remove the wires. Both pliers are used as temporary heat sinks in order to protect the diodes. Excess heat can damage a good diode.

9. Remove the three insulated diode plate screws and the insulators, and separate the diode plates.

10. Remove the drive pulley (Fig. 45).

11. Remove the three screws that hold the front bearing retainer, and remove the front housing.

12. If the bearing is being replaced, pull the bearing using a bearing puller (Fig. 46). Remove the bearing retainer and spacer. It will not be necessary to remove the stop ring, unless it has been damaged.

Cleaning and Inspection

1. The rotor, stator, diode rectifier assemblies, and bearings are not to be cleaned with solvent. These parts are to be wiped off with a clean cloth. Cleaning solvent may cause damage to the electrical parts or contaminate the bearings internal lubricant. Wash all other parts in solvent and dry them.

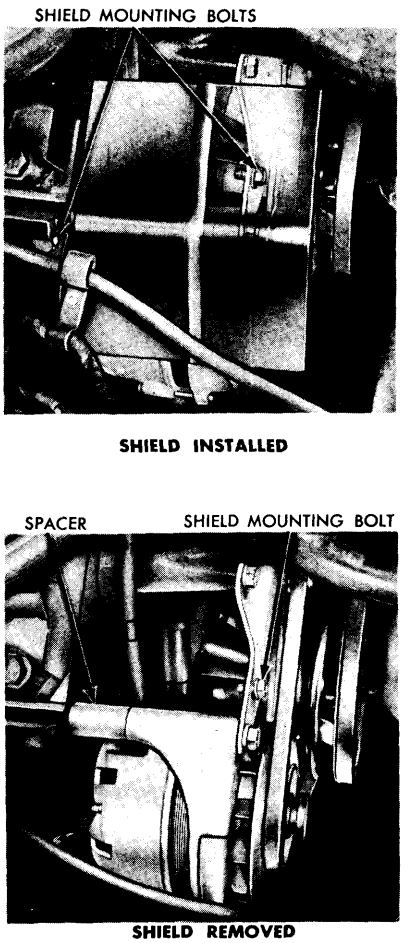

FIG. 41—Alternator Mounting

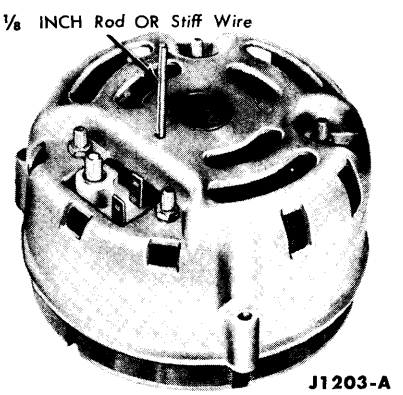

FIG. 42—Retracting Alternator Brushes

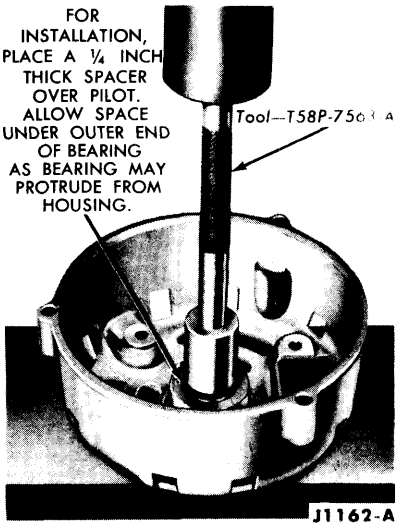

FIG. 43—Rear Bearing Replacement

2. Rotate the front bearing on the drive shaft. Check for any scraping noise, looseness or roughness that will indicate that the bearing is excessively worn. As the bearing is being rotated, look for any lubricant leakage. If any of these conditions exist, replace the bearing.

3. Place the rear end bearing on the slip-ring end of the shaft and rotate the bearing on the shaft. Make the same check for noise, looseness or roughness as was made for the front bearing. Replace the bearing if these conditions exist, or if the lubricant is lost or contaminated.

4. Check both the front and rear housings for cracks. Check the front housing for stripped threads in the mounting holes. Replace defective housings.

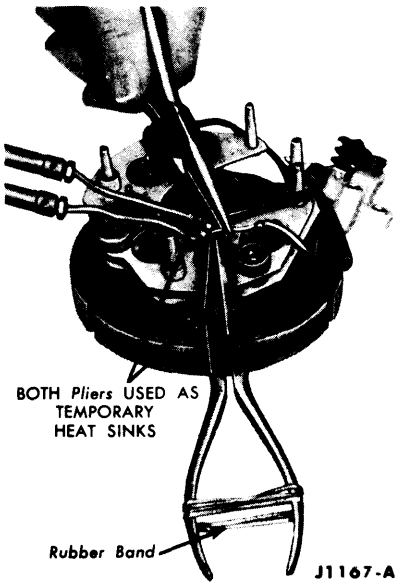

FIG. 44—Soldering Diode Leads

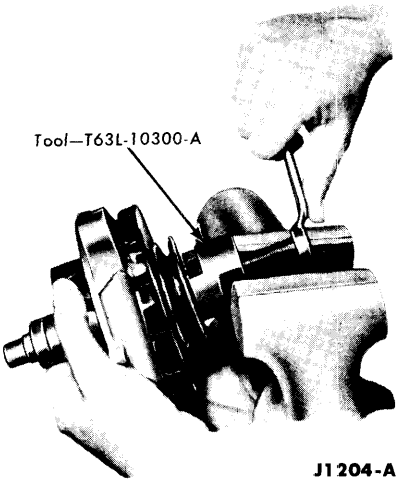

FIG. 45—Pulley Removal

5. Pulleys that have been removed and installed several times may have to be replaced because of the increased bore diameter. A pulley is not suitable for reuse if more than 1/4 of the shaft length will enter the pulley bore with light pressure. Replace any pulley that is bent out of shape.

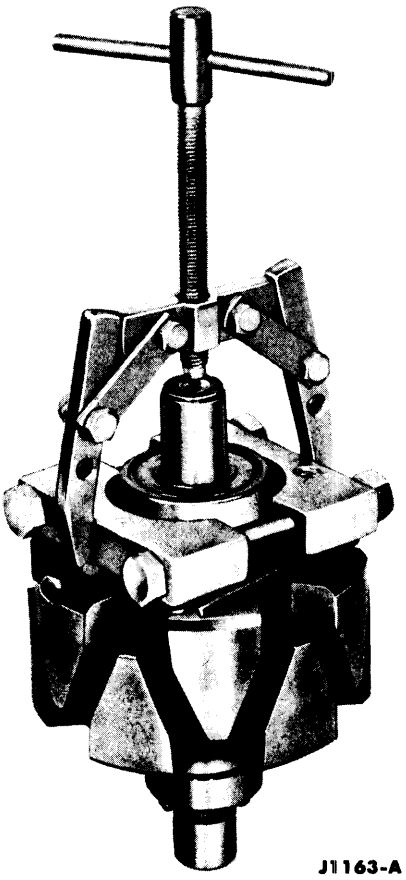

FIG. 46—Front Bearing Removal

6. Check all wire leads on both the stator and rotor assemblies for loose soldered connections, and for burned insulation. Resolder poor connections. Replace parts that show burned insulation.

7. Check the slip rings for damaged insulation. Check the slip rings for runout (Fig. 47). If the slip rings are more than 0.0005 inch out of round, take a light cut (minimum diameter limit 1.2 inches) from the face of the rings to true them up. If the slip rings are badly damaged, the entire rotor will have to be replaced, as they are serviced as a complete assembly.

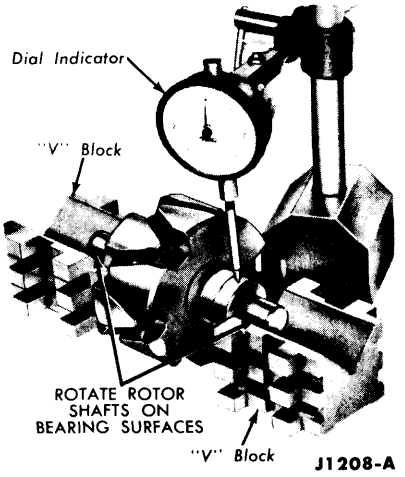

FIG. 47—Slip Ring Runout Check

8. Replace any parts that are burned or cracked. Replace brushes that are worn to less than 0.350 inch in length. Replace the brush spring if it has less than 7 to 12 ounces tension.

Assembly

1. If the stop-ring on the drive shaft was broken, install a new stop-ring. Push the new ring on the shaft and into the groove. **Do not open the ring with snap-ring pliers.**

2. Position the front bearing spacer on the drive shaft against the stop-ring, and position the bearing retainer on the shaft with the flat surface of the retainer outward.

3. Putting pressure on the inner race only, press the new bearing on the shaft until it contacts the spacer.

4. Place the front housing over the shaft, with the bearing positioned in the front housing cavity. Install the bearing retainer mounting screws.

5. Press the pulley onto the shaft until the hub just touches the inner race of the front bearing (Fig. 48).

A new pulley must be installed if more than 1/4 of the shaft length will enter the old pulley bore with light pressure.

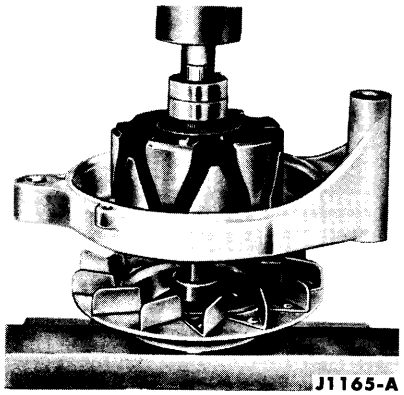

FIG. 48—Pulley Installation

6. If a new diode plate is being installed, mount the two plates together so that they are insulated from each other (insulating spacer between the plates and cupped insulator under the screw head, as shown in Fig. 49). Solder the wire leads to the diodes as shown in Fig. 44, in order to avoid excessive heat to the diode. Use only a 100 watt iron.

7. Insert the new field brush terminal blade into the slot in the terminal spacer block with the brush pig-tail extending toward the brush holder pivots (Fig. 49).

8. Install the brush holders and brush spring to the terminal block, then position the brushes in the brush holders (Fig. 49).

9. Solder the neutral wire to the neutral terminal. Position the terminal spacer block assembly on the rectifier plate mounting studs, with the ground brush lug over the mounting stud farthest from the output terminal as shown in Fig. 49.

10. Place the spacers on the rectifier mounting studs farthest from the terminal block (Fig. 49).

11. Install the rear bearing so that the open end of the bearing is flush with the inner surface of the housing boss (Fig. 43). Allow space under the outer end of the bearing during installation.

12. Place the rear end housing over the rectifier plate and stator assembly and mount the rectifier plates to the housing.

13. Retract the brushes and insert a short length of 1/8-inch rod of stiff wire through the hole in the rear end housing to hold the brushes in the retracted position (Fig. 50).

14. Wipe clean the rear bearing surface of the rotor shaft.

15. Position the rear housing and stator assembly over the rotor and aligning the scribe marks made during disassembly, install the housing through bolts. Remove the brush retracting rod.

REGULATOR

The alternator regulator is composed of two control units mounted as an assembly (Fig. 51). Because the reverse current through the rectifier is small, a reverse current cutout relay is not needed. The alternator is self-current limiting, thus a current limiter is not needed.

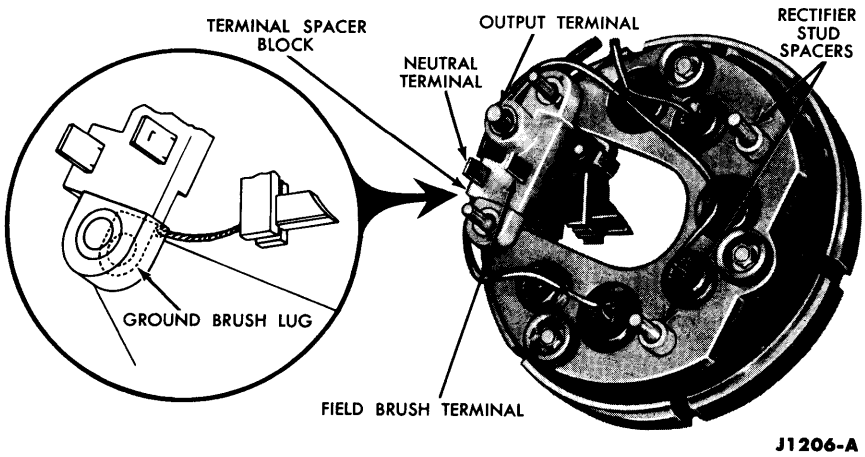

FIG. 49—Stator, Heat Sink and Terminal Spacer Block Assembly

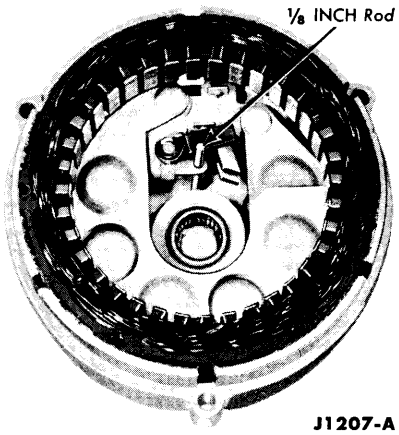

FIG. 50—Brushes Retracted for Assembly

Field Relay. The field relay serves to supply battery current to the field (Fig. 35). When the ignition switch is closed, battery current flows through the charge indicator light 15 ohm parallel resistor, and through the regulator to the field. This small current is enough to allow the alternator to start generating, and is necessary, as residual magnetism in the alternator may be too small to start voltage build-up. The charge indicator light is shunted with a 15 ohm resistor to supply the starting field current if the charge indicator light burns out.

When the alternator builds up enough voltage to close the field relay contacts, full voltage is applied to the field, and the charge indicator light goes out.

Voltage Limiter. The temperature compensated voltage limiter is a double contact unit. Limiting is accomplished by controlling the amount of current supplied to the rotating field.

When the upper contacts are closed (Fig. 35), full system voltage is applied to the field and maximum field current will flow. When the limiter armature floats between the contacts, field current is reduced by flowing through the 10.5 ohm field resistor. When the limiter lower contacts are closed, zero current flows to the field. At low engine speed and with a load applied, the armature vibrates on the upper contact. At high engine speed and light or no load, the armature vibrates on the lower contact.

A 50 ohm resistor is connected from the field terminal to ground to absorb electrical surges in the alternator circuits as the voltage limiter armature vibrates on the contacts.

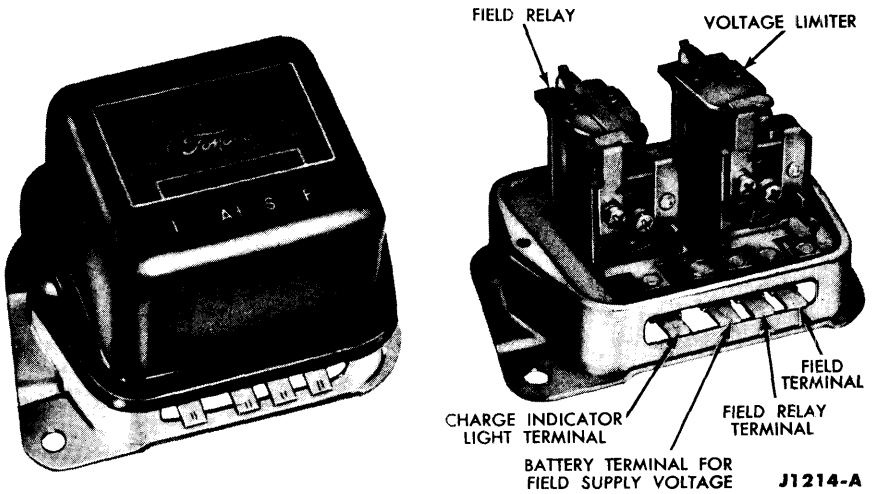

FIG. 51—Alternator Regulator

Regulator and Circuit Tests. The tests presented are outlined for on the car operation. Be sure that the regulator is at "normal" operating temperature (equivalent to the temperature after 20 minutes of operation on the car with 10 ampere load).

Field Relay Test. Disconnect the regulator terminal plug, and remove the regulator cover. Make the connections as shown in Fig. 52. Slowly rotate the field resistance control clockwise from the "OFF" position until the field relay contacts close. Observe the voltmeter readings at the moment that the relay closes. This is the relay closing voltage. If the relay closes immediately, even with the field resistance close to the "OFF" position, use a 6-volt battery for this test. If the closing voltage is not to specifications, adjust the relay.

Voltage Limiter Test. For test purposes, the lower stage (armature vibrating on the lower contact) regulation is used. Voltage limiter calibration tests must be made with the regulator cover in place and the regulator at "normal" operating temperature (equivalent to the temperature after 20 minutes of operation on the car with a 10 ampere load).

Make the test connections as shown in Fig. 53. Turn all accessories off, including door operated dome lights. Close the battery adapter switch, start the engine, then open the adapter switch. Attach the voltage regulation thermometer to the regulator cover. Operate the engine at 2000 rpm for 5 minutes. Turn the master control to the "CUTOUT RELAY" position. If the ammeter indicates more than 10 amperes, stop the engine, remove the battery cables and charge the battery.

When the battery is charged, and the voltage regulator has been temperature stabilized, rotate the master control to the "VOLTAGE REG." position, the ammeter should indicate less than 2 amperes.

Cycle the regulator. Stop the engine, close the adapter switch, start the engine, and open the adapter

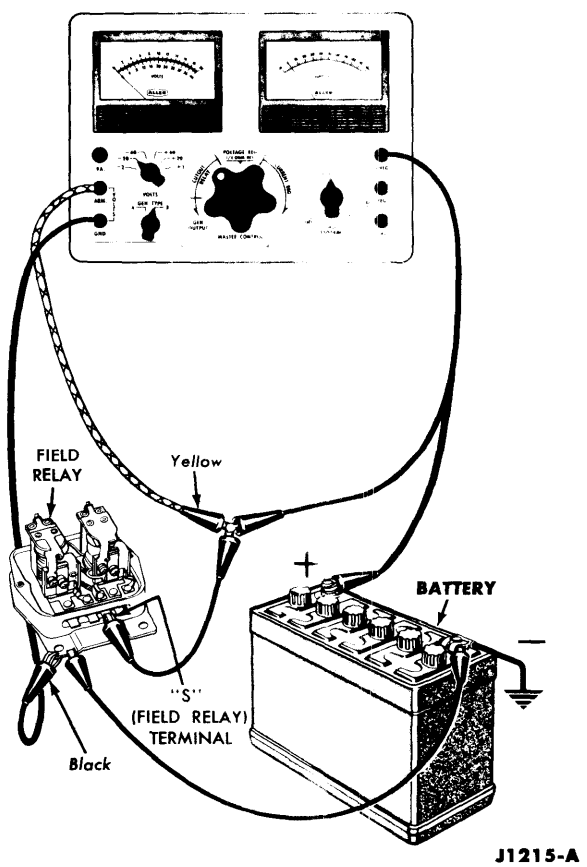

FIG. 52—Field Relay Test

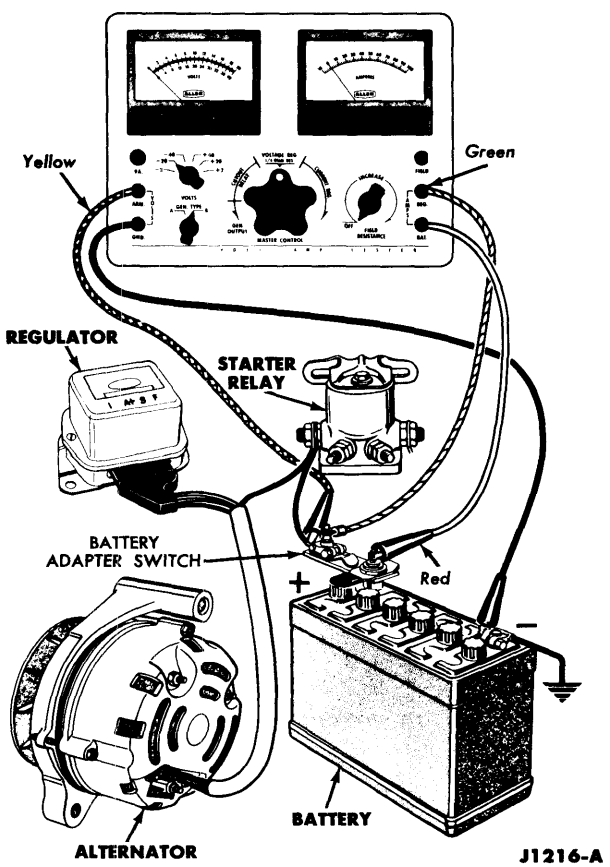

FIG. 53—Voltage Limiter Test

switch. Allow the battery to normalize for a short time, then read the voltmeter. Read the thermometer, and compare the voltmeter reading with the voltage given in Table I for the ambient temperature indicated on the thermometer. If the regulated voltage is not within specifications, make a voltage limiter adjustment. After each adjustment, be sure to cycle the regulator before each reading. The readings must be made with the cover in place.

TABLE 1—Voltage Regulator Setting Versus Ambient Air Temperature

Ambient Air Temperature °F.	Voltage Regulator Setting (Volts)
50	14.3 - 15.1
75	14.1 - 14.9
100	13.9 - 14.7
125	13.8 - 14.6
150	13.6 - 14.4
175	13.5 - 14.3

Circuit Resistance Test. For the purpose of this test, the resistance values of the circuits have been converted to voltage drop readings for a current flow of 20 amperes.

To check the alternator to battery positive terminal voltage drop, make the connections as shown in Fig. 54. Turn off all electrical accessories, and lights. Close the battery adapter switch, start the engine, then open the battery adapter switch. Slowly increase the engine speed until the ammeter reads 20 amperes. Note the voltmeter reading at this point. The voltage reading should be no greater than 0.3 volt.

These voltage drops have been computed for a standard car. The current used by any auxiliary, continuously operating, heavy-duty equipment will not show on the ammeter and will have to be taken into account when making this test.

To check the alternator to battery ground terminal voltage drop, make the connections as shown in Fig. 55. Close the battery adapter switch, start the engine and open the adapter switch. Slowly increase the engine speed until the ammeter reads 20 amperes. The voltage indicated on the voltmeter should be less than 0.1 volt.

VOLTAGE REGULATOR ADJUSTMENTS. Erratic operation of the regulator, indicated by erratic movement of the voltmeter during a voltage limiter test, may be caused by dirty or pitted regulator contacts. Use a very fine abrasive paper such as silicone carbide, 400 grade, to clean the field relay and the voltage limiter contacts. Wear off the sharp edges of the abrasive by rubbing it against another piece of abrasive paper. Fold the abrasive paper over and pull the paper through the contacts to clean them. Keep all oil or

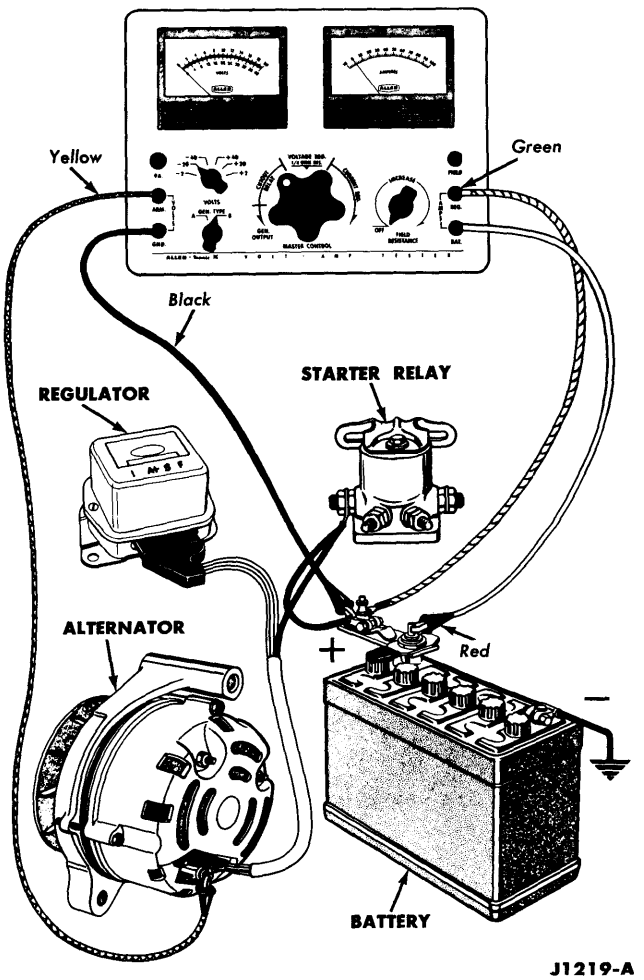

FIG. 54—Voltage Drop Test—Alternator to Battery Positive Terminal

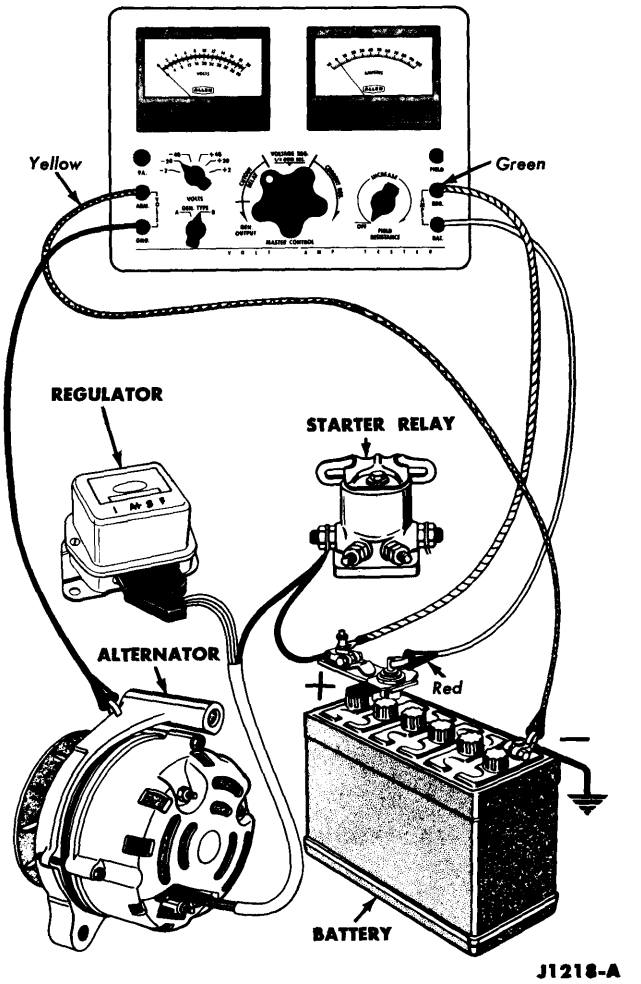

FIG. 55—Voltage Drop Test—Alternator to Battery Ground Terminal

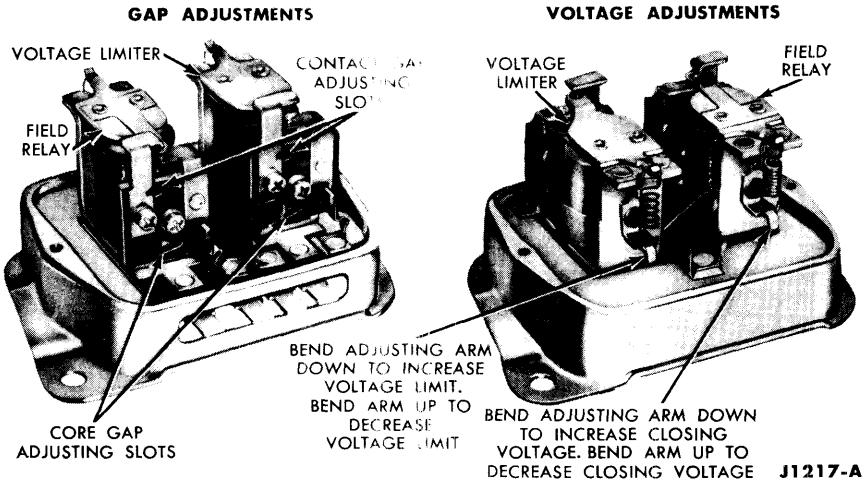

FIG. 56—Regulator Adjustments

grease from contacting the points. Do not use compressed air to clean the regulator. When adjusting the gap spacing, use only hospital clean feeler gauges.

Regulator Gap Adjustments. The difference between the upper stage and lower stage regulation (0.3 volt), is determined by the voltage limiter point and core gaps. Make the gap adjustments with the regulator removed from the car.

Adjust the point gap first. Loosen the left side lock screw 1/4 turn. Use a screw driver blade in the adjustment slot above the lock screw. Adjust the upper contact until there is 0.010 to 0.015-inch gap between the lower contacts. Tighten the lock screw and recheck the contact gap.

Adjust the core gap. Loosen the center lock screw 1/4 turn. Use a screw driver blade in the adjustment slot under the lock screw. Adjust the core gap for 0.045 to 0.052-inch clearance between the armature and the core at the edge of the core closest to the contact points. Tighten the lock screw and recheck the core gap.

Regulator Voltage Adjustments. Final adjustment of the regulator must be made with the regulator at normal operating temperature.

The field relay closing voltage is adjusted by bending the spring arm (Fig. 56). To increase the closing voltage, bend the spring arm down. To decrease the closing voltage, bend the spring arm up.

The voltage limit is adjusted by bending the voltage limiter spring arm (Fig. 56). To increase the voltage setting, bend the adjusting arm downward. To decrease the voltage setting, bend the adjusting arm upward.

Before setting the voltage and before making a final voltage test, the alternator speed must be reduced to zero and the ignition switch opened momentarily, to cycle the regulator.

GROUP 10—LIGHTS, INSTRUMENTS AND ACCESSORIES

The 1963 maintenance recommendations are in Group 12 and the 1963 specifications are in Group 13 of this manual.

All the service procedures outlined in Group 10 of the 1962 Shop Manual remain the same with the following exceptions.

LIGHTING SYSTEM (Part 10-1)

HEADLIGHT ALIGNMENT

Headlight alignment should be made with a person seated in the driver's seat, the car unloaded, and the trunk empty except for the spare tire and jacking equipment. The fuel tank should be half full, plus or minus one gallon, and the tires should have recommended air pressure.

BULB REPLACEMENT

The 1963 instrument cluster cable positions have been changed. Figure 57 shows the instrument connections with the cable routing.

The fuse panel is mounted on the right cowl panel under the right end of the instrument panel (Fig. 58).

INSTRUMENTS (Part 10-1)

WINDSHIELD WIPER

The 1963 windshield wiper motor is hydraulically operated. The hydraulic power for the motor is obtained from the power steering unit. The hydraulic fluid flows from pump, through the steering gear to the wiper motor, and then to the fluid reservoir. During wiper operation, a part of the fluid is by-passed through the motor by a valve on the motor.

Wiper Motor Removal

1. Remove the speaker grille and speaker. Disconnect the antenna at the radio.
2. Remove the wiper arm and blade assemblies, pivot shaft nuts and bezels.
3. Remove the cowl top panel with the antenna.
4. Disconnect both pivot shaft links at the wiper motor.
5. Remove the air cleaner.

CAUTION: Use care in disconnecting hydraulic lines so as not to burn the hands with the hot hydraulic fluid.

6. Disconnect the inlet line at the wiper motor fitting (Fig. 59), and remove the brass inlet fitting from the wiper motor.
7. Remove the inlet line seal plate and seal from the dash panel.
8. Remove the wiper motor to mounting bracket mounting screws (underside of motor).
9. Disconnect the outlet line and the control cable from the motor and remove the motor.

Wiper Motor Installation

1. Transfer the fittings to the new motor.
2. Position the wiper motor to the bracket area, connect and adjust the control cable.
3. Start the outlet line in the fitting, position the motor to the mounting bracket and install the mounting screws. Tighten the outlet fitting (Fig. 60).
4. Connect the links to the wiper motor arm.
5. Position the rubber seal on the brass inlet fitting, and install the fitting into the motor.

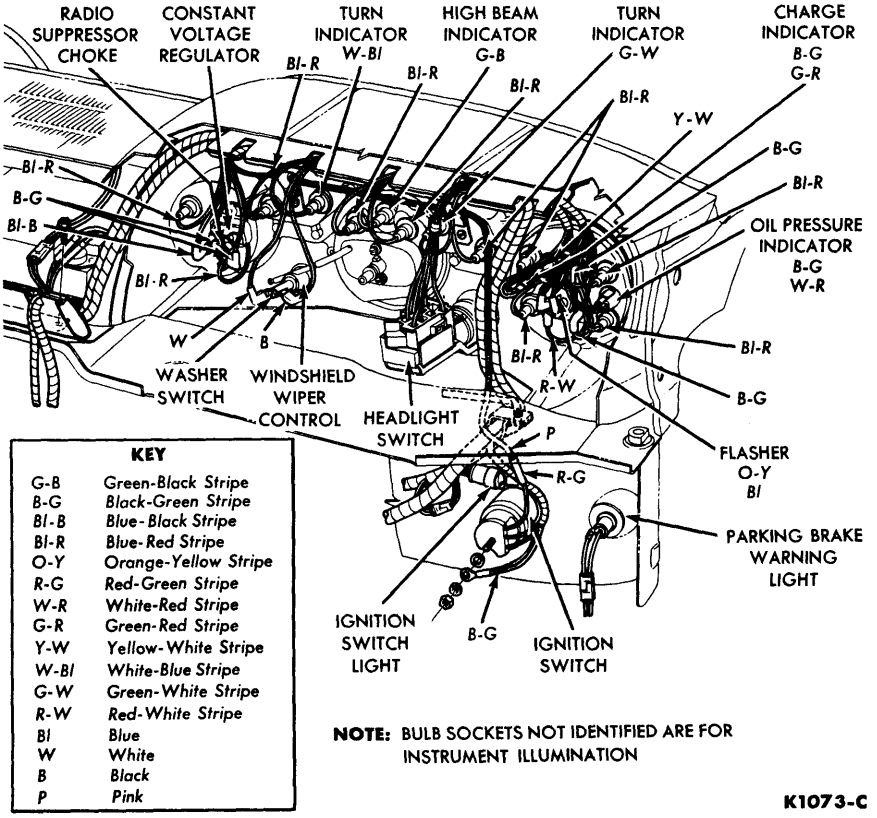

FIG. 57—Instrument Panel Wiring

6. Install the seal plate over the seal and inlet fitting.

7. Connect the inlet line to the inlet fitting (Fig. 59).

8. Start the engine and check the operation of the motor. Stop the engine and check and add fluid to the power steering reservoir if necessary.

9. Install the cowl top panel with antenna. Route the antenna lead-in to the radio, and connect the lead-in

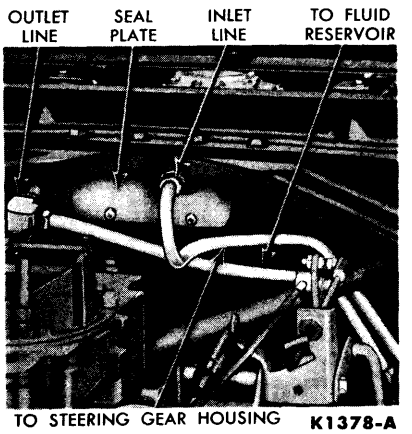

FIG. 59—Wiper Motor Hydraulic Line Connections

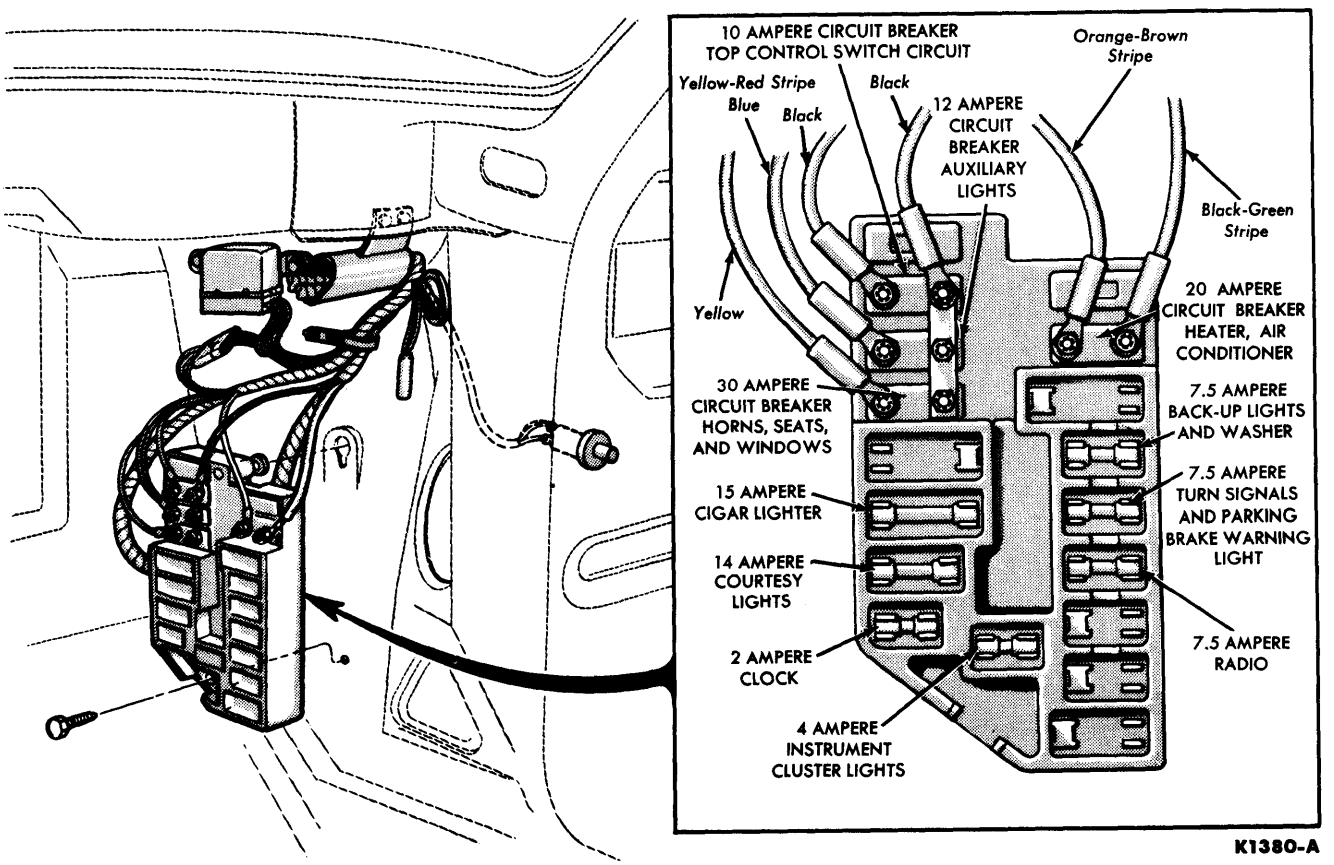

FIG. 58—Fuse Panel Installation

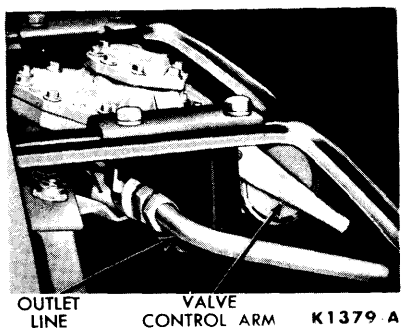

FIG. 60—Wiper Motor Mounting

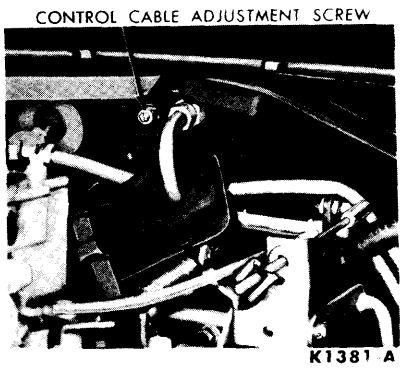

FIG. 61—Wiper Motor Cable Adjustment

to the radio. Install the speaker and grille.

10. Install the bezels, nuts and wiper arm assemblies. Install the air cleaner.

Wiper Motor Adjustments and Checks. The only adjustment required on the hydraulic motor is the control cable adjustment. Figure 61 shows the cable adjustment location. Remove the seal plate mounting screws and position the plate and seal out of the way. Adjust the control cable so that the control knob on instrument panel moves the valve control lever on the motor from off to full on.

If the motor operates sluggishly, check the cable adjustment. If this is not the fault, check the hydraulic fluid pressure. If the power steering gear operates satisfactorily, it may be assumed that the fluid pressure is all right. Check for binding wiper pivot shafts and arms. Repair or replace the wiper motor and valves if necessary.

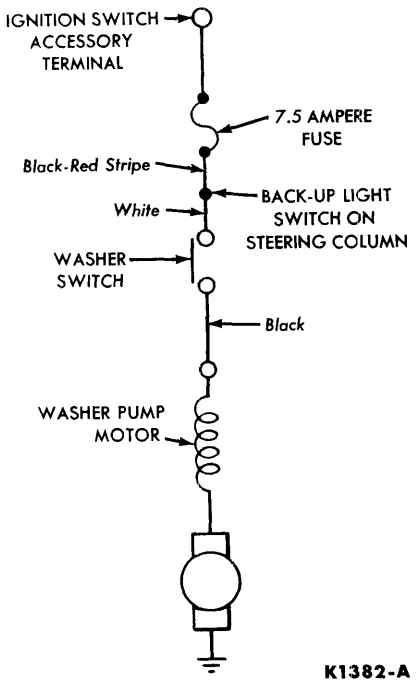

FIG. 62—Windshield Washer Pump Circuit

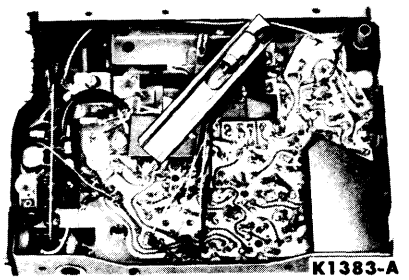

FIG. 63—Pilot Light Replacement—Model F-3TBS

The wiper control on the instrument panel also operates the windshield washer. The washer is operated by pulling out on the control knob. This action closes a switch on the back of the control (Fig. 57). Figure 62 shows the wiring diagram of the windshield washer pump and control switch.

RADIO AND HEATER (Part 10-2)

GENERAL INFORMATION

Two radios are available. Both are completely transistorized. The standard model is 3TMS and is manufactured by Motorola. An AM-FM model, F-3TBS is also available and is manufactured by Bendix.

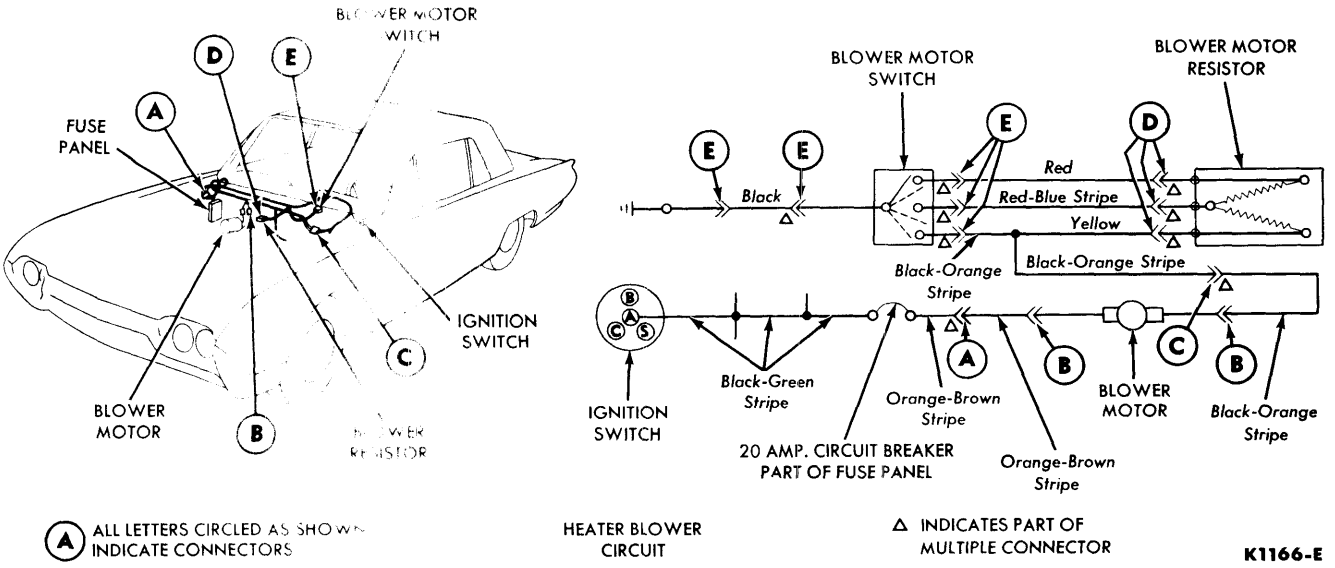

FIG. 64—Heater Motor Circuit

PILOT LIGHT REPLACEMENT MODEL F-3TBS

The pilot light on the model F-3TBS is located under the top cover. Remove the radio from the car and remove the top cover. The pilot light is made available after removing the pilot light shield (Fig. 63).

HEATER

Figure 64 shows the electrical connections for the heater blower motor.

AIR CONDITIONING (Part 10-3)

OPERATION

Figure 65 illustrates the SelectAire conditioner electrical control system.

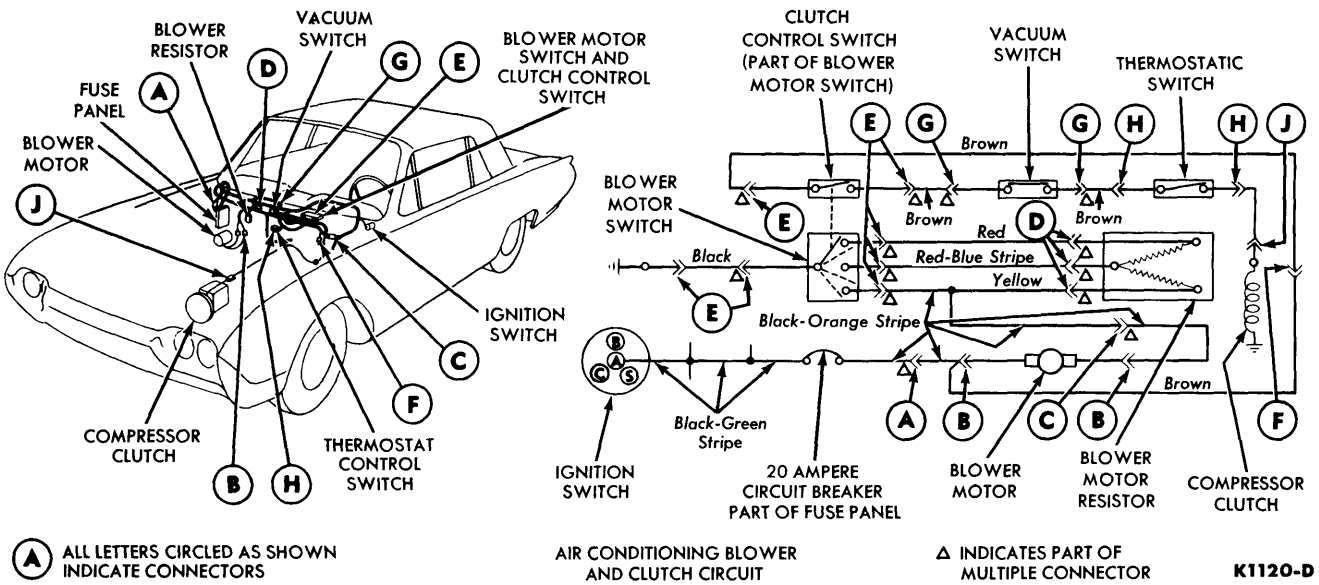

FIG. 65—SelectAire Electrical Control System

GROUP 11—BODY

BODY MAINTENANCE AND REPAIR (Part 11-1)

The service information outlined in the 1962 Shop Manual applies to the 1963 models with the following additional recommended service procedures.

FRONT END BODY STRUCTURE

When body repair work is performed on cars having the front end structures welded on instead of bolted on, use the following procedure to repair the necessary body area.

Lower Side Member

1. Position the front side member assembly against the torque box in lower dash panel area (Fig. 66). Locate the front side member assembly by inserting a 5/8 inch pin through the 5/8 inch locating holes in the front side member assembly and dash panel (Fig. 66).
2. Apply arc or gas weld along both sides of the front side member as shown in Fig. 66.
3. Position the dash panel lower reinforcement to the front side member gusset over the front side lower member to obtain flush contact with the dash panel and the lower member (Fig. 66).
4. Clamp the gusset to the lower member and tack weld the gusset in place. Remove the clamp and weld the gusset as shown in Fig. 66.

Upper Side Member

1. Position the front fender apron to cowl side member assembly in place at the wheel housing area in alignment with the cowl side panel. Clamp the member assembly into weld position.
2. To prevent warpage and heat fracture of the thin gauge metal, apply wet asbestos packs against the inboard surface of the cowl panel.
3. Tack weld the member assembly in place, remove the clamp and complete the weld pattern as shown in Fig. 66—View "B".

SEAT MECHANISM AND CONSTRUCTION

Rear Seat Back Removal and Installation

1. To remove the rear seat back, first remove the rear seat cushion. Remove the 2 screws that retain the bottom edge of the rear seat back to the body (Fig. 67).
2. Remove the 2 screws that retain the side of the rear seat back to the body (Fig. 67).
3. Lift the bottom of the seat back slightly outward to allow the hanger wire to clear the retaining brackets. Remove the rear seat back.
4. To install the rear seat back, reverse the above procedure.

EXTERIOR MOULDINGS

The exterior mouldings and various methods of retaining the mouldings are shown in Fig. 68. To remove the mouldings secured with bolts or nuts, it may be necessary to remove some of the interior trim panels.

LANDAU TOP ASSEMBLY

The landau top consists of a conventional steel roof panel with a padded texture vinyl covering. Because of this type of special top construction, a unique technique will be

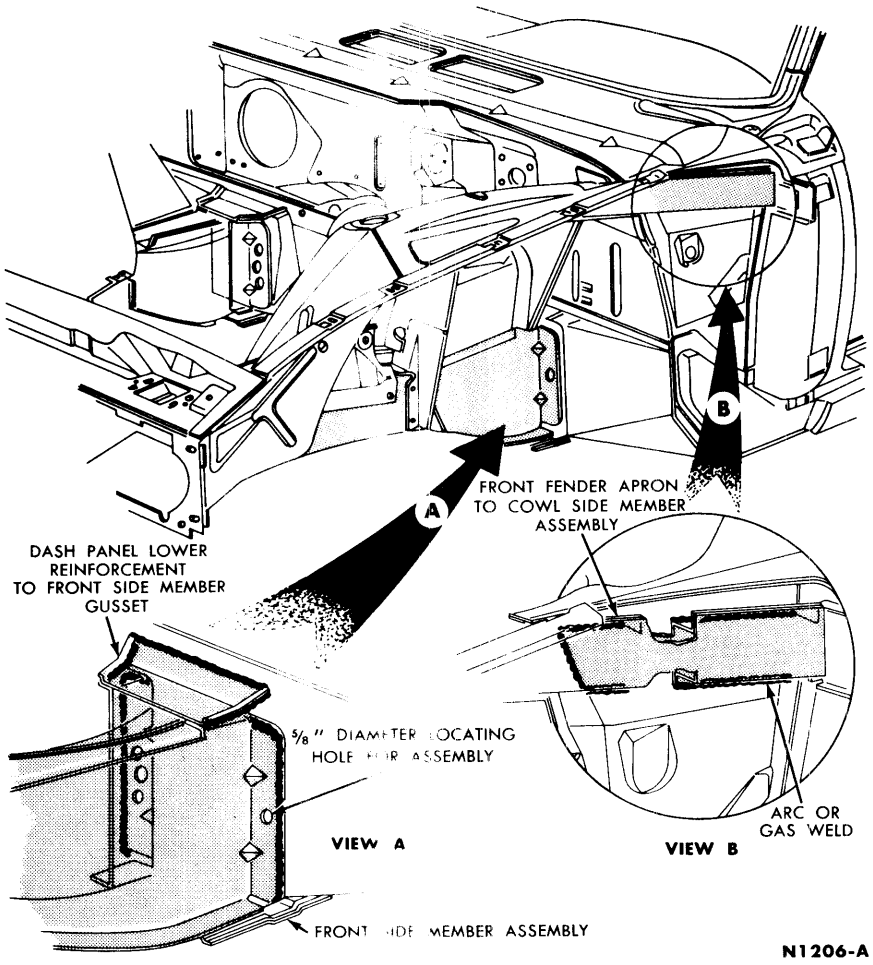

FIG. 66—Welded Front End Structure

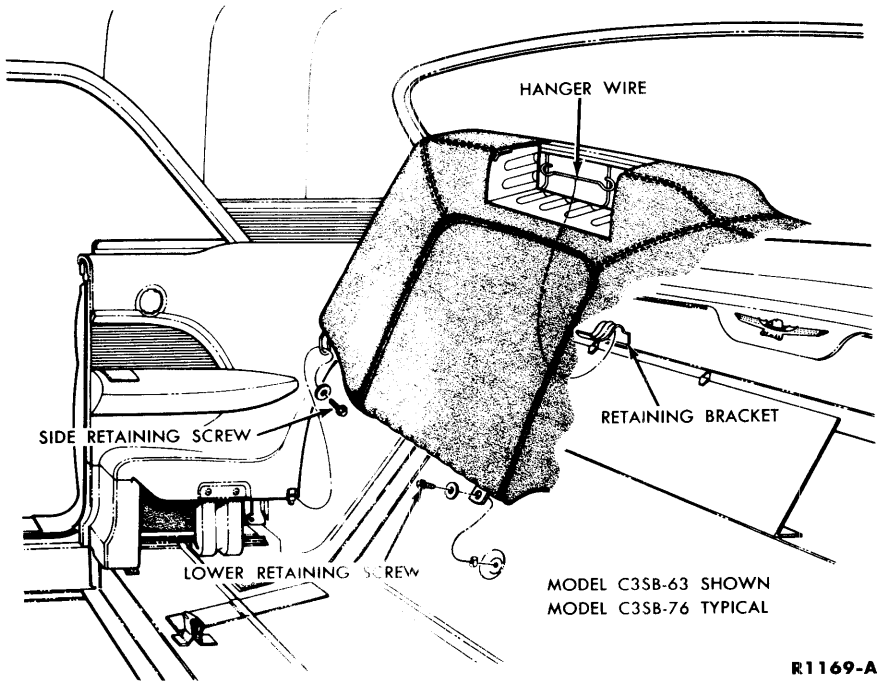

FIG. 67—Rear Seat Back Installation

used to service and retain the vinyl covering to the metal top.

Vinyl Cover and Pad Removal

1. Loosen the headlining at the roof side quarter areas to gain access to the ornament assembly retaining nuts (Fig. 69).
2. Remove the roof side ornament assembly retaining nuts and remove the ornament assemblies (Fig. 69).
3. Remove the quarter outside belt mouldings and retainers.
4. Remove the back window mouldings.
5. Remove the windshield.
6. Remove the roof side rail and drip mouldings.
7. To remove the right and left hand drip rail cover retainers, first center-punch the peened rivet heads from the underside of the drip rails. Use a 3/16 inch drill and carefully drill out only the peened head of each rivet (Fig. 70—View DD). Use a small diameter punch to drive out the remaining portion of each rivet, but do not enlarge the rivet holes.
8. Remove the roof to quarter panel cover retaining screws (Fig. 70).
9. Remove the trim clips, drive nails and/or screws from the rear window flange (Fig. 70—Views AA and FF).
10. Remove the cover and if necessary, the pad from the roof panel. If the pad is removed, remove all the old sealer from the roof panel.

Cover and Pad Installation

1. When a new pad is being installed, carefully locate and cement the center and side pads to the roof panel. Adhesive should be applied to an area about ¾ inch wide around the entire outside edge of each pad section (Fig. 71) and the corresponding areas of the roof panel. After the pad is secured, trim off any excess material.
2. Carefully position the outside cover on the pad and roof panel. The cover has punch marks, fore and aft, that should be lined up with the retaining holes in the header and back window pinchweld flange to properly position the cover. Use adhesive to cement the cover at the header and back window pinchweld flanges.
3. Using the existing holes in the header, secure the cover to the header with 6-32 x 3/8 inch pan head self-tapping screws and 0.156 ID x 0.375 OD flat washers (Fig. 70). After the cover has been secured,

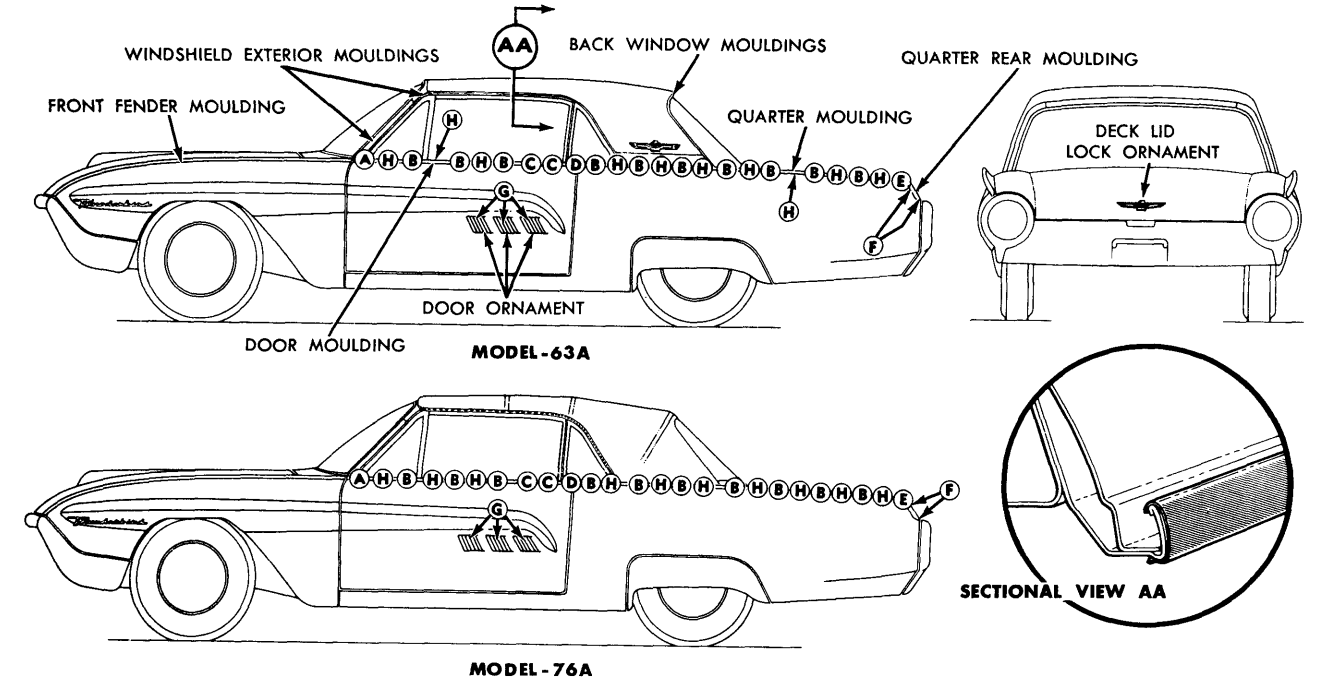

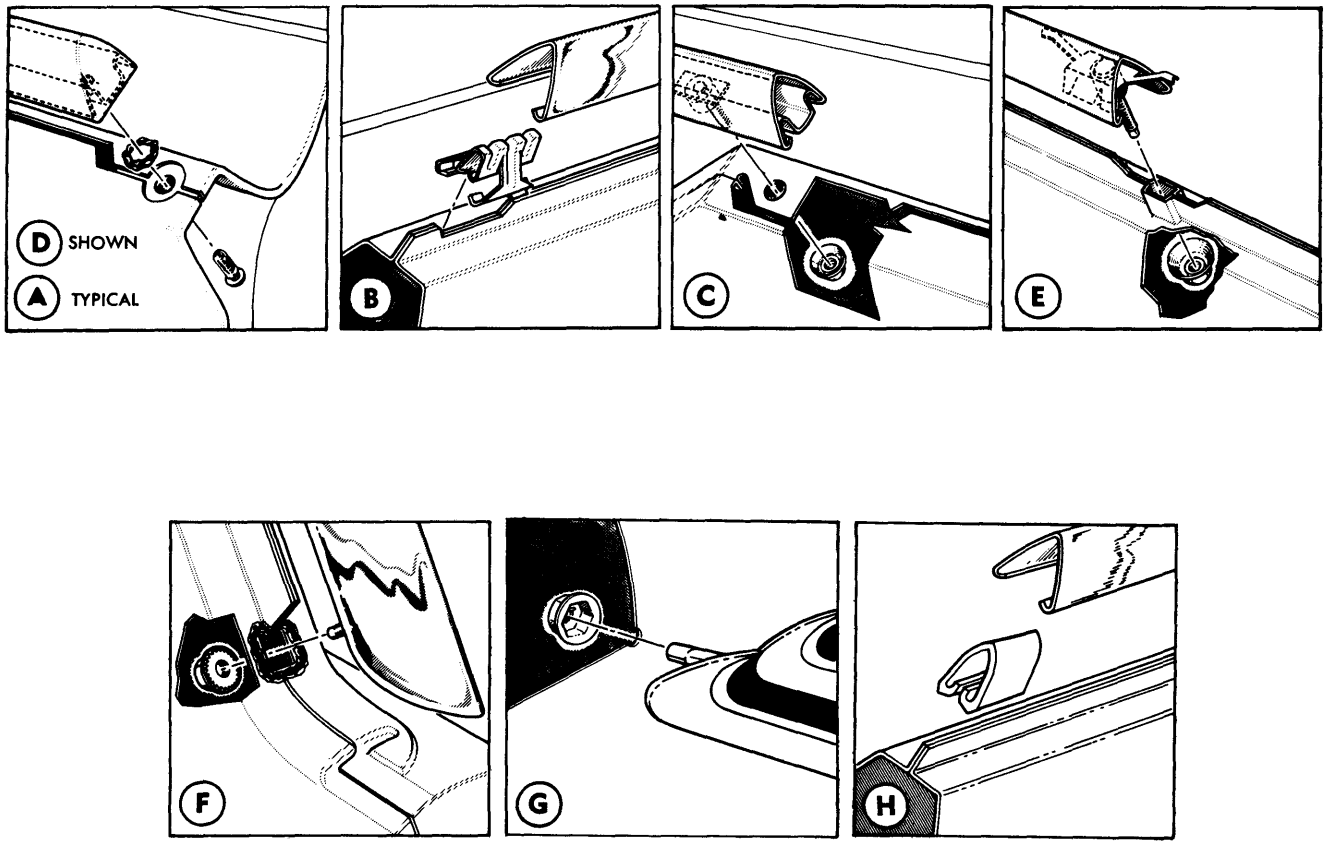

N1205-A

FIG. 68—Body Exterior Mouldings

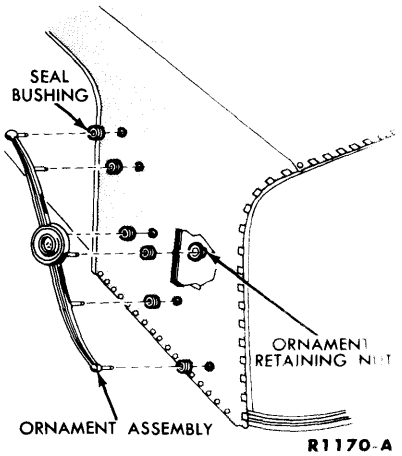

FIG. 69—Roof Side Ornament Assembly

trim off any excess cover material

4. Secure the cover at the belt line using the existing holes with 6-32 x 3/8 inch pan head self-tapping screws and 0.156 ID x 0.375 OD x 1/16 inch flat washers (Fig. 70). After the cover has been secured, trim off any excess cover material.

5. The cover has to be secured at the back window pinchweld flange with 6-32 x 3/8 inch pan head self-tapping screws and 0.156 ID x 0.375 OD x 1/16 inch flat washers (Fig. 70).

There should be (18) holes spaced approximately 1-1/2 inches apart at the back window pinchweld flange. If it is necessary to drill additional holes to install the (18) screws, use a 0.107-0.111 inch diameter drill.

6. Secure the cover to the sides of the back window pinchweld flange with (18) trim clips. Position the clips approximately 1-1/2 inches apart at the side of the pinchweld and 1 inch apart at the top (Fig. 70).

7. Install the windshield.

8. Install the drip rail cover retainers with 1/8 x 11/32 inch flat countersunk head aluminum rivets (Fig. 70).

9. Apply the proper sealer over the entire surface of the drip rail retainers (Fig. 70).

10. Install the drip rail mouldings.

11. Install outside windshield mouldings.

12. Install outside back window mouldings.

13. Install quarter outside belt mouldings.

14. Install side ornament assemblies (Fig. 69).

15. Install the headlining in quarter area.

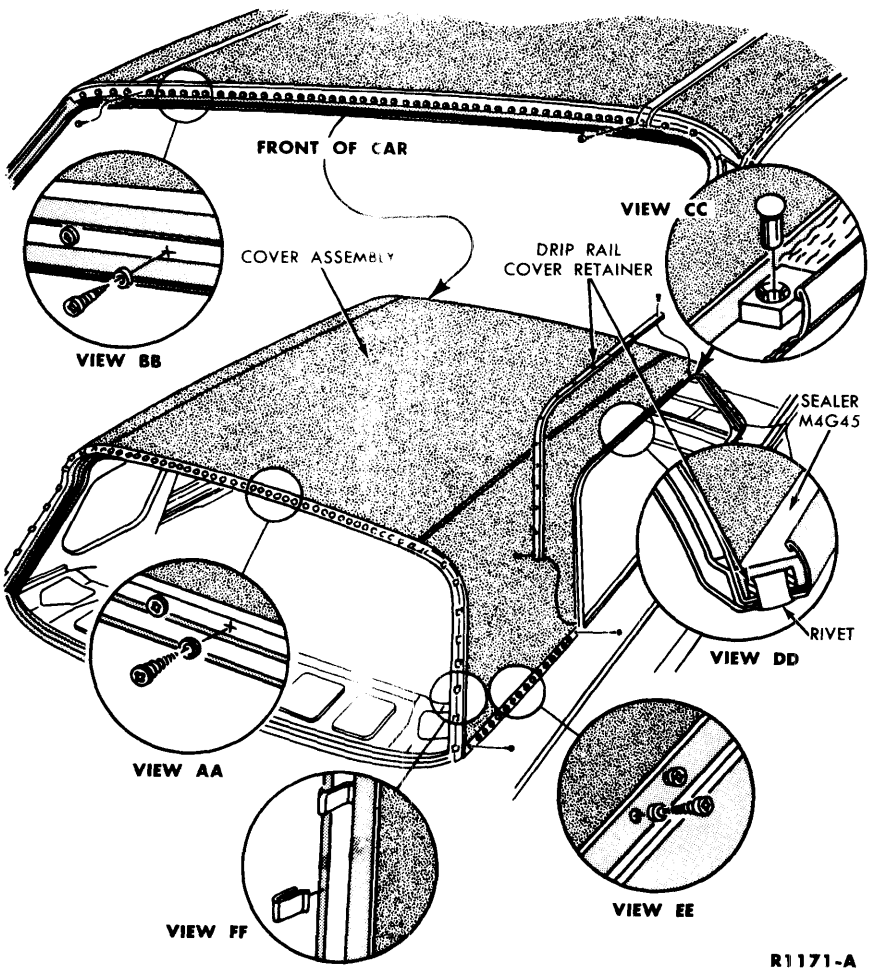

FIG. 70—Top Cover Installation

REMOTE CONTROL REAR VIEW MIRROR

The remote control rear view mirror is controlled from inside the car. Adjustment is made with the control knob which is located on the left front door trim panel.

Movement of the control knob operates three cables which control the movement of the mirror. The cables are securely attached to the mirror and no attempt should be made to remove or replace the cables.

Replacement

1. Remove the mirror control retaining nut and washer from the control (Fig. 72).

2. Remove the trim panel from the door.

3. Disconnect the three control cables from the control head.

4. Attach a piece of covered wire to the control cables.

5. Remove two mirror attaching screws and remove the mirror from the door.

6. Disconnect the covered wire from the control cables and attach the wires to the replacement mirror cables.

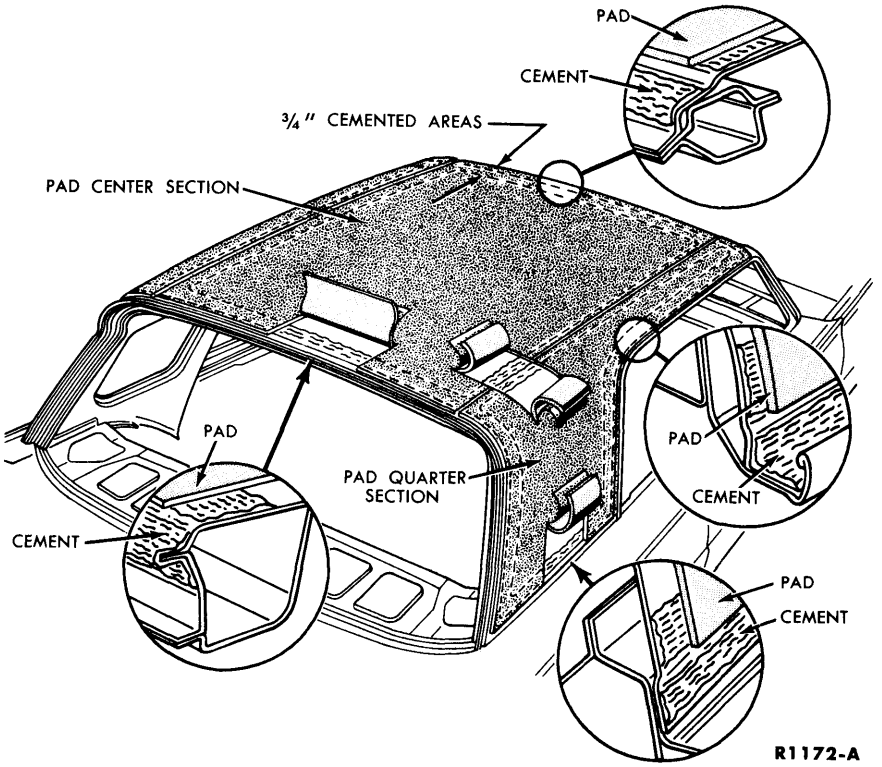

FIG. 71—Top Cover Pad Installation

7. Install the mirror on the door, using the covered wire to route the control cables through the door.

8. Disconnect the covered wire from the cables and connect the cables to the control head. Be sure to install the retainer over the cables after they are installed.

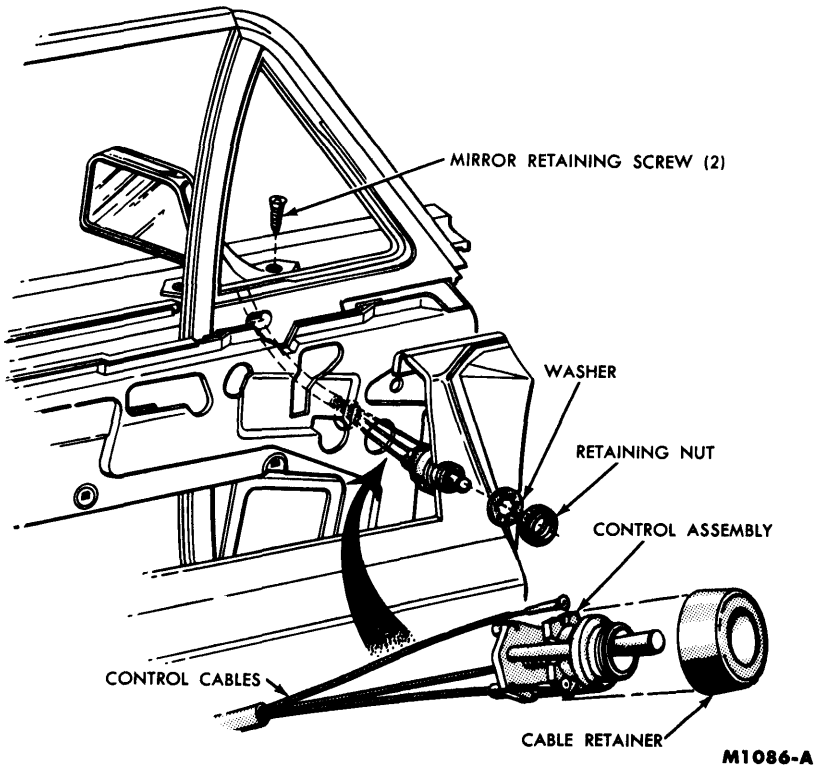

FIG. 72—Exterior Remote Control Rear View Mirror—Typical

9. Position the control head in the trim panel opening and install the washer and retaining nut.

10. Install the door trim panel.

INSIDE REAR VIEW MIRROR (BONDED TO WINDSHIELD)

The following procedures are used when replacing or repairing a bonded-to-windshield type rear view mirror.

Removal

1. Clean both the inside and outside surfaces of the windshield in the area of the mirror mounting bracket. Inspect the windshield for stone chips and scratches.

2. Using welding putty or wet rags, insulate all chips or scratches within 12 inches of the mirror mounting bracket.

3. Apply heat to the bracket mounting area from outside the windshield with a standard 250 watt infrared bulb (heat lamp). Hold the lamp approximately 4 inches from the windshield, and rotate it in a small circle.

4. The mirror mounting bracket can be pulled off the windshield glass in approximately 8-10 minutes, using the mirror as a handle.

5. Slowly remove the heat lamp. **Do not remove the insulating materials until the windshield has cooled to room temperature.**

6. Remove the mirror and arm from the bracket.

Installation

1. Locate and mark, with a wax pencil, the bracket location on the outside surface of the windshield (Fig. 73).

2. Use a good grade of "Ethyl Alcohol" to thoroughly clean the inside glass surface bracket mounting area and mounting bracket face. It is important that the mounting surfaces are properly cleaned before the resin is applied.

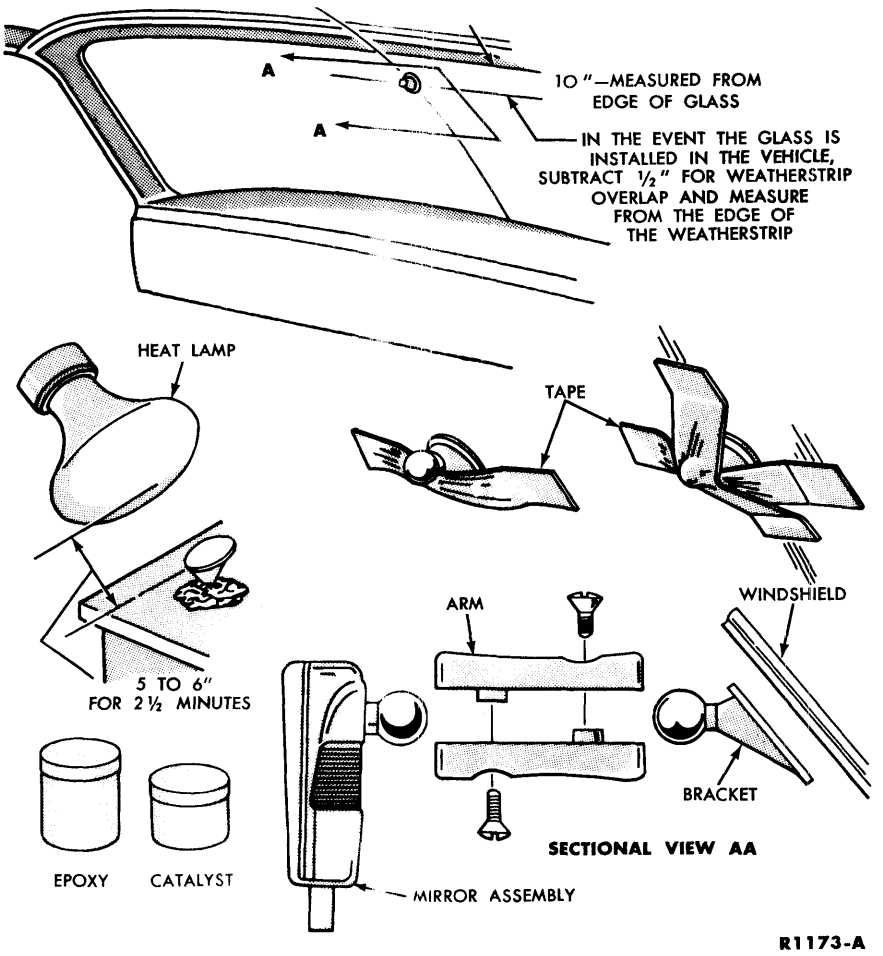

FIG. 73—Bonded Windshield Rear View Mirror Installation

3. To mix the resin, pour the entire contents of the small catalyst bottle into the large epoxy bottle (Fig. 73).

4. Stir the contents for three to five minutes.

CAUTION: To guarantee the correct mixing ratio and resulting bond strength, it is mandatory that the entire contents of both bottles are used and properly mixed. Under no circumstances should only portions of the epoxy or catalyst be used.

5. Apply the mixed resin to the bracket mounting surface. Level off the resin film as smoothly as possible.

6. Place the mounting bracket surface upward in a vise or in a small mound of permagum or any suitable holding material that will support the mounting bracket (Fig. 73). Hold a standard 250 watt infrared lamp about five to six inches from the mounting surface of the bracket for two and one half minutes (Fig. 73).

7. Allow the bracket to cool for one minute. With light hand pressure, apply the mounting surface of the bracket to the desired inside area of the windshield.

8. Secure the bracket to the windshield, using a piece of tape about five inches long located just under the knob of the bracket (Fig. 73). Apply another piece of tape in the vertical direction (Fig. 73) to firmly hold the mounting bracket in place on the windshield.

9. When the temperatures are above 67°F, the mirror and arm should not be mounted to the bracket for eight hours, to allow the resin to properly adhere the bracket to the glass. However, the car may be used with the bracket taped in place one hour after installation.

When the temperatures are below 67°, the mirror and arm should not be mounted to the bracket for sixteen hours. However, the car can be used two hours after the bracket has been taped in place.

10. After the bracket has had time to adhere to the glass, remove the tape and install the mirror and arm to the bracket (Fig. 73).

FRONT SHEET METAL AND BODY TRIM (Part 11-2)

DOOR AND QUARTER TRIM PANELS

Door Trim Panel Replacement

1. Remove the control handles (Fig. 74). Remove the arm rest retaining screws, and remove the arm rest (Fig. 75).

2. Remove the lock push button (Fig. 75). Remove the door belt corner cap (Fig. 75). Remove the screws that retain the trim panel front and rear retainer strips to the door inner panel, and remove the trim panel. If the door has electric windows, disconnect the door switch wires at the switch. If the internal area of the door has to be checked,

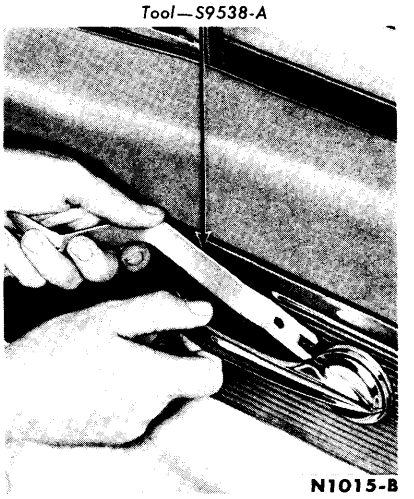

FIG. 74—Inside Door Handle Removal

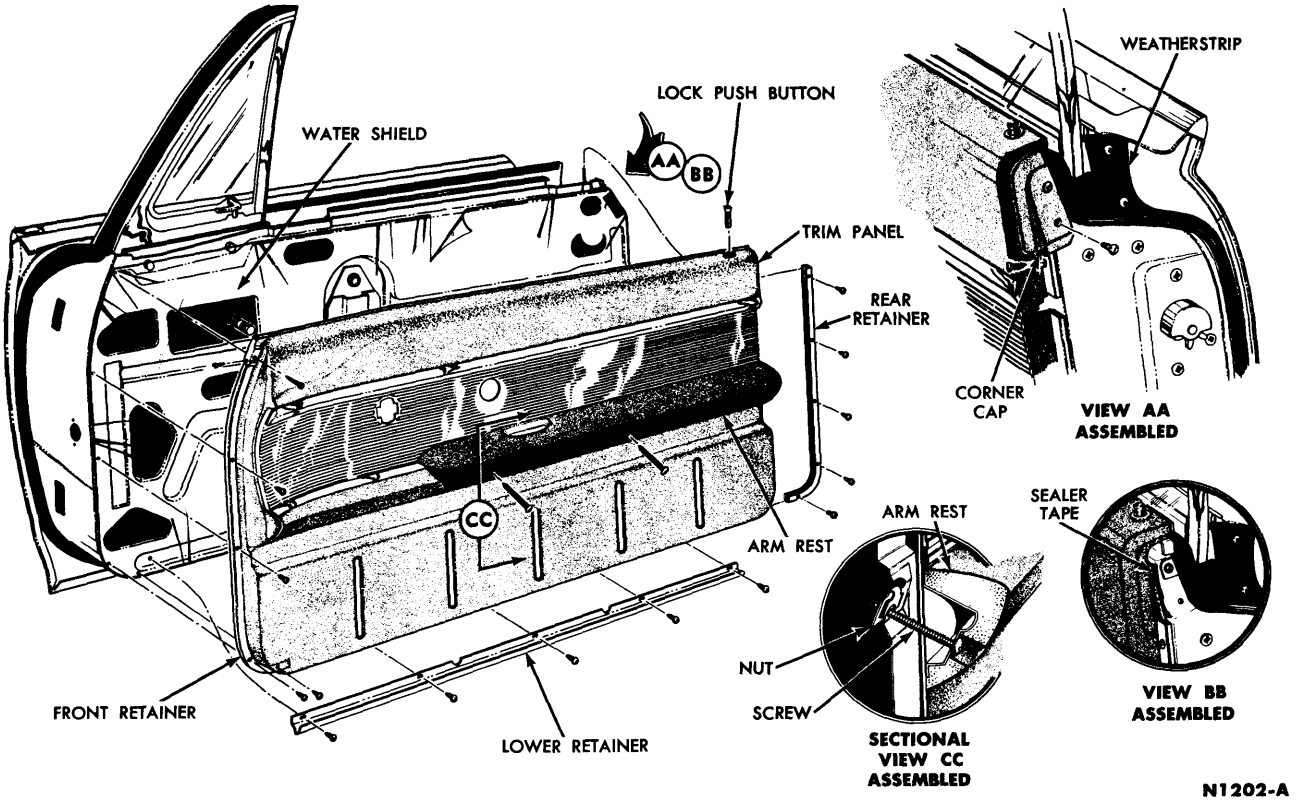

FIG. 75—Door Trim Panel

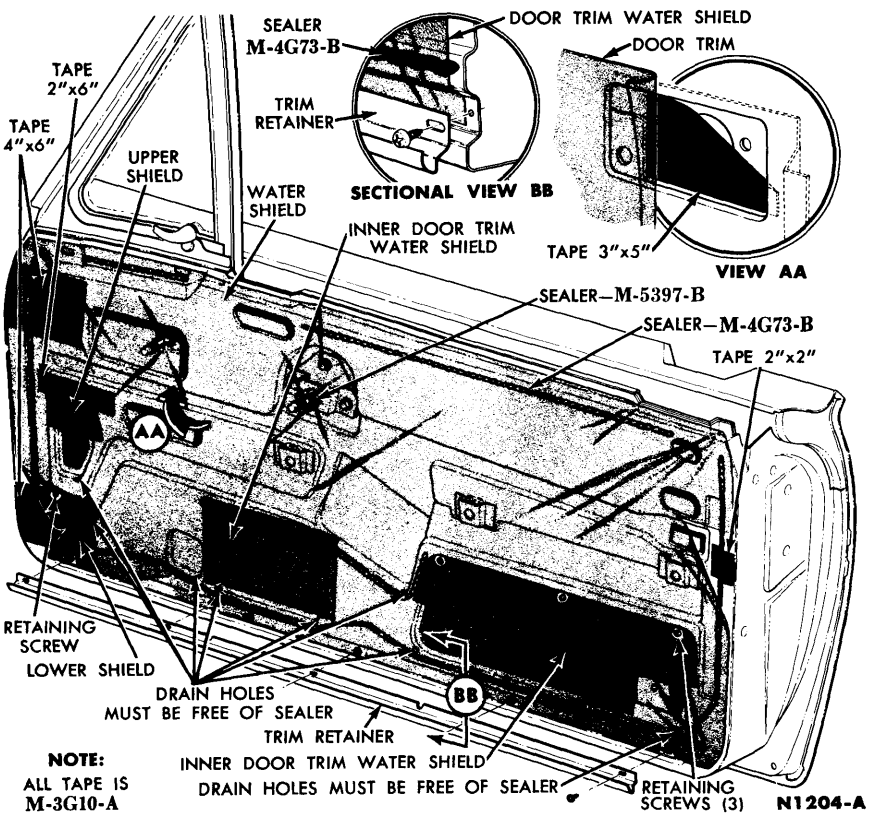

FIG. 76—Door Trim Water Shield and Sealer

Fig. 76 shows the required water shield and sealer installation.

3. Transfer the trim panel mouldings, weatherstrip, front and rear retaining strips, and the power window switch to the new trim panel.

4. Install the trim panel to the door. If the door has electric windows, connect the switch wires.

5. Insert the interior handle retaining clip in the handle, place the plate against the trim panel with the collar facing the handle, and push the handle until the clip snaps into the groove.

6. Install the lock push button, the panel retaining screws, the corner cap, and the arm rest.

DOORS, WINDOWS AND DECK LID (Part 11-3)

VENT AND DOOR WINDOWS

Door Window Adjustments

VERTICAL ADJUSTMENTS. To level the glass with the belt line, raise or lower or adjust sideways the regu-

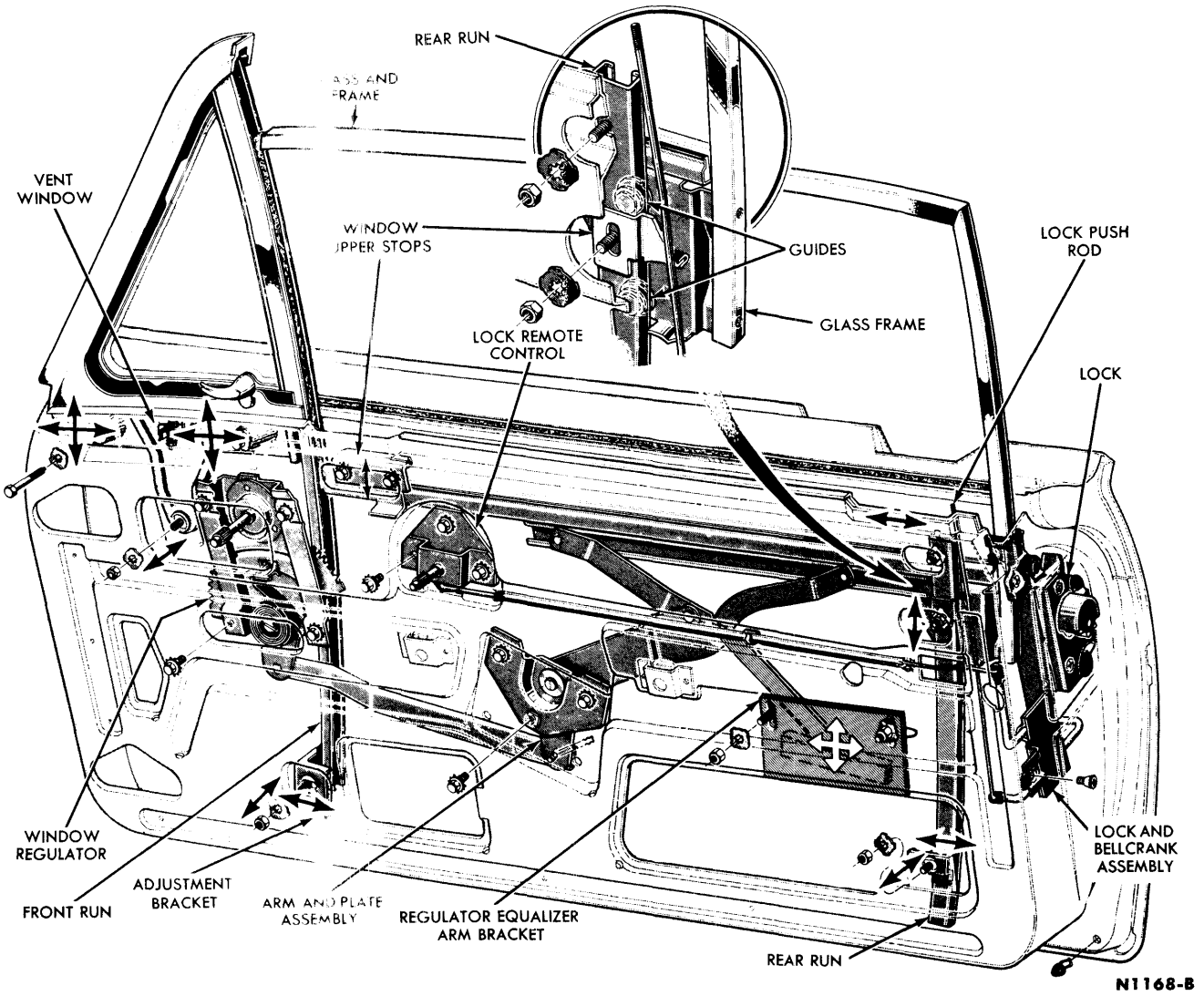

FIG. 77—Door Window Mechanism Adjustment

lator arm equalizer bracket (Fig. 77).

To limit the window travel and align the top of the glass frame with the vent assembly, adjust the window upper stops.

FORE-AND-AFT ADJUSTMENTS. To obtain a snug fit between the front run and the glass, loosen the window guide upper and lower retaining nuts (Fig. 77). With the glass in the down position, adjust the guide as required. Tighten the guide lower retaining nut, raise the glass, and then adjust and tighten the guide upper retaining nut.

LATERAL (IN-AND-OUT) ADJUSTMENTS. To tilt the top of the glass frame for parallel alignment with the roof rail weatherstrip, adjust the window run and guide lower adjustment screw as required (Fig. 77).

CONVERTIBLE TOP (Part 11-4)

MAINTENANCE AND ADJUSTMENTS

Top Weatherstrip Installation and Adjustment.

1. With all material removed from the header and with the header bow raised, apply sealer at the header bow dowels. Apply sealer the full length of the header weatherstrip and install the weatherstrip to the header with the retainers and the retaining screws (Fig. 78—View BB.)

2. Apply sealer to the intermediate front, side and rear rail weatherstrip assemblies as shown in Fig. 78. Apply sealer to the rear side rail weatherstrip location (Fig. 78). Install the weatherstrips with the necessary retaining screws, washers and locknuts. The locknut assemblies must be left loose to permit further adjustment of the weatherstrip. View AA of Fig. 78 shows the proper installation of the side weatherstrips.

3. Lower the top and lock the header bow at the windshield. With

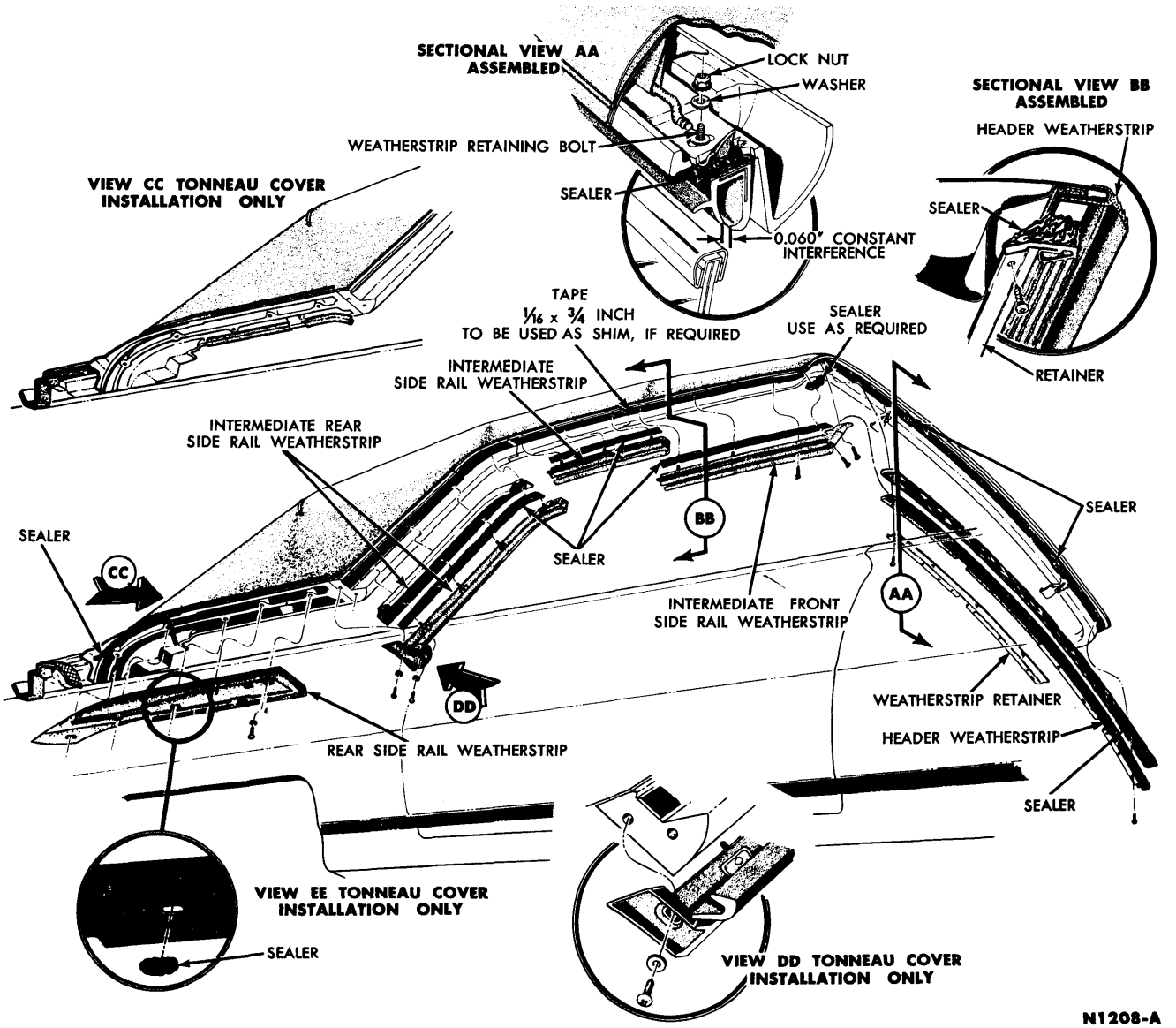

FIG. 78—Convertible Top Weatherstrip Adjustment

the windows up and the doors closed, adjust the side rail weatherstrip assembly as required to obtain the 0.060 interference dimension between the sealing lip of the weatherstrip and the door or quarter window frame as shown in Fig. 78—View AA.

4. Adjust the intermediate rear and side rail weatherstrip to obtain the proper weather seal between the weatherstrips contacting edges. Tighten the weatherstrip retaining locknuts to secure the adjusted weatherstrips into assembled position.

5. Check and adjust the alignment of the rear side rail weatherstrip and the header bow weatherstrip. If the car has the tonneau cover, installation Views "CC", "DD" and "EE" of Fig. 78 illustrate the necessary sealing and installation procedures.

DECK LID OPENING

When the deck lid will not open through the use of top control switch, an alternate electrical method can be used to open the deck lid.

1. Remove the rear seat back to gain access to the deck unlock and open relays.

2. Remove the multiple plug from the deck unlock relay (Fig. 79).

3. Fabricate a jumper wire as shown in Fig. 79. Energize the deck unlock motor through the disconnected multiple plug and relay panel bus bar with the jumper wire (Fig. 79).

4. If the deck lid will not unlock, there is either an open wire to the motor or a failed motor. The deck lid will have to be manually unlocked.

5. If the deck lid will not open after being unlocked, remove the multiple plug from the deck open relay located behind the rear seat back. Energize the deck motor and pump assembly through the deck

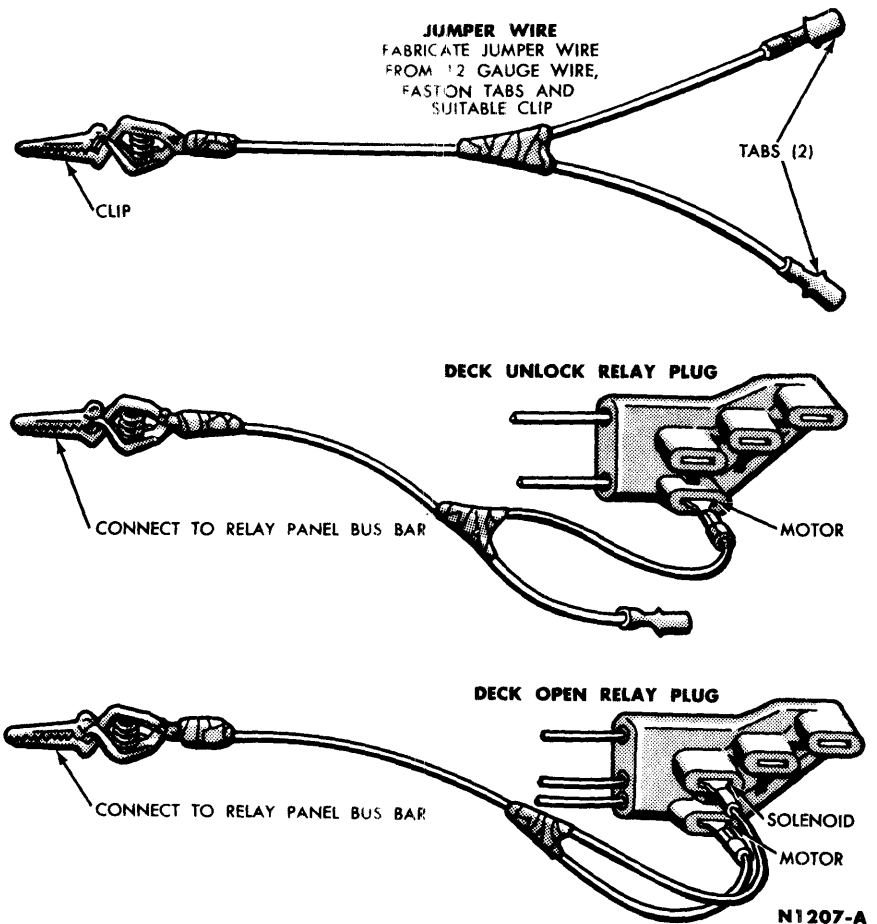

FIG. 79—Alternate Method of Opening Deck Lid

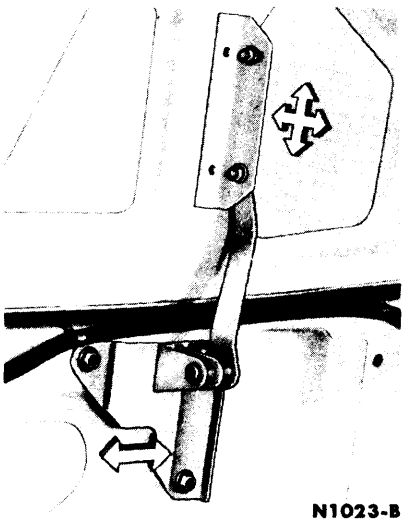

FIG. 80—Deck Lid Finish Panel Adjustments

open relay plug with the use of the jumper wire (Fig. 79).

6. If the deck will not open, there is an open wire or a failed motor. If the motor operates but is under a heavy load, the solenoid could not be opening. It will be necessary to manually open the deck lid.

7. Refer to the 1962 Shop Manual for the manual procedures to unlock or raise the deck lid.

DECK LID AREA ADJUSTMENTS

Fore-and-Aft Adjustment of the Finish Panel. Adjust the space between the edges of the finish panel and the deck lid and/or the body as follows:

1. Slightly loosen the screws that attach the finish panel hinge to the deck lid (Fig. 80).

2. Shift the finish panel so that there is equal space between the edges of the finish panel and the deck lid.

3. Tighten the retaining screws securely.

Up-and-Down Adjustment of the Finish Panel

1. Slightly loosen the hinge arm retaining bolts at the finish panel (Fig. 80).

2. Raise or lower the finish panel until the finish panel is flush with the surface of the deck lid. Make certain that the weatherstrip seal is not disturbed.

3. Tighten the retaining bolts securely.

Lateral or Fore-and-Aft Deck Lid Adjustment

1. Slightly loosen the hinge support bracket retaining bolts at the lower back panel.

2. Shift the deck lid either laterally, fore, or aft in the enlarged holes, until there is equal clearance along the sides and rear edge of the deck lid.

3. Tighten the hinge support bracket retaining bolts.

TONNEAU COVER

Figure 81 illustrates the tonneau cover installation.

Removal

1. Fold the left or right front seat back forward to provide access to the hold down clamp.

2. Release the clamp hook from the footman loop.

3. Remove the two cover to body thumbscrew-type retainers and remove the cover.

Installation

1. Position the cover assembly on the car and tighten the two thumbscrew-type retainers.

2. Fold either the left or right front seat back forward to provide access to the hold down clamp. Engage the hold down clamp hook to the footman loop.

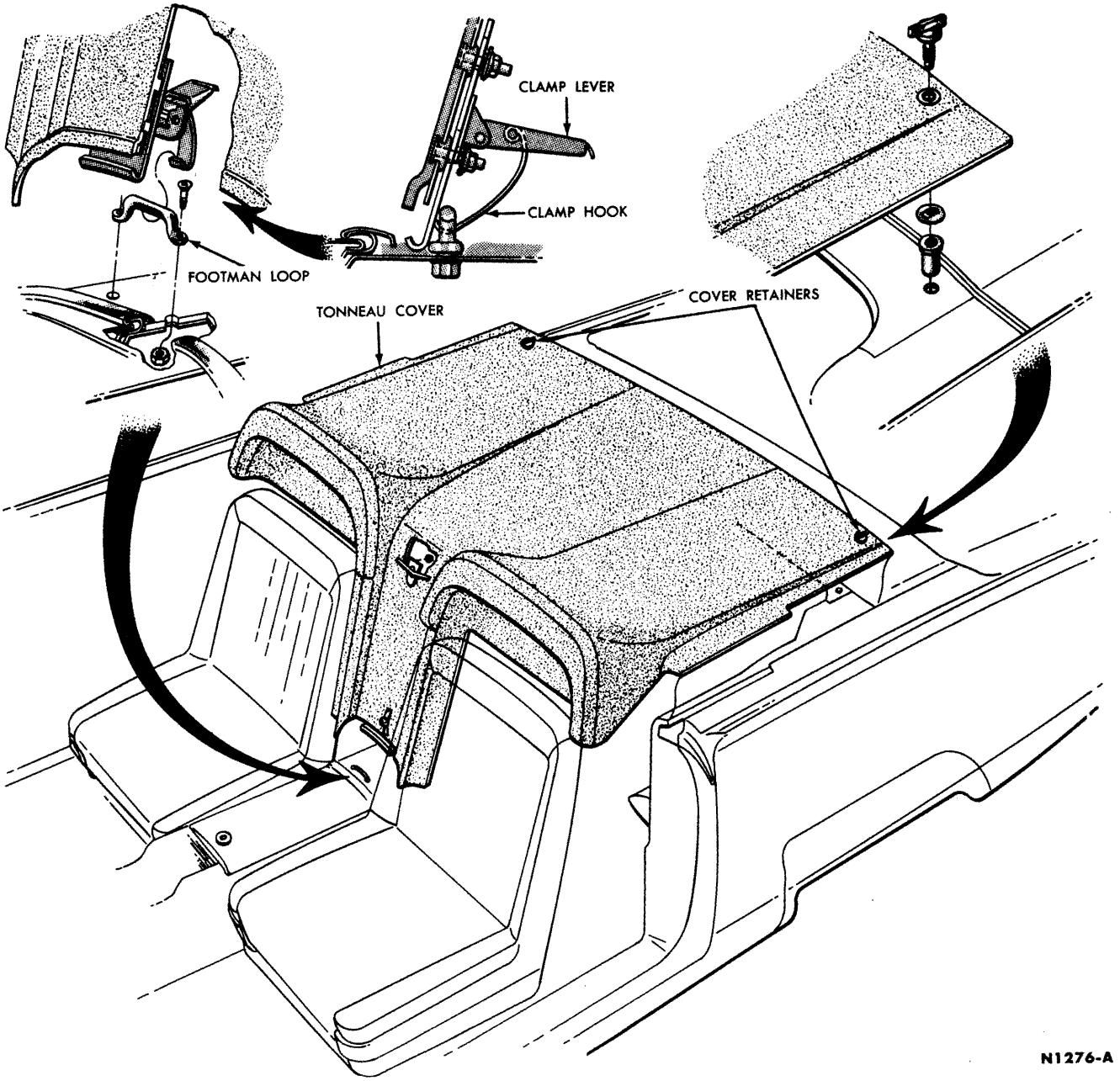

FIG. 81—Tonneau Cover Installation

GROUP 12—MAINTENANCE, LUBRICATION AND SPECIAL TOOLS

MAINTENANCE SCHEDULE (PART 12-1)

MAINTENANCE SCHEDULE

Interval	Operation	Lubricant
SEASONALLY	Check Air Conditioner State of Refrigerant Charge and Add Refrigerant as Required	
	Adjust Accelerator Pump Lever	
AS REQUIRED	Check Convertible Top Pump Reservoir Fluid Level and Add Fluid as Required	Use Rotunda Automatic Transmission Fluid, Ford Part No. C1AZ-19582-B (Ford Spec. M2C33-D) for adding or for complete refill. If Rotunda fluid is not available, automatic transmission fluid marked "Type A, Suffix A" may be used to "add to" the factory fill to maintain fluid level.
	Check Steering Gear Pre-load (After 6000-Mile Inspection)	
	Check Battery Fluid Level and Charge	
	Adjust Carburetor Idle	
	Lubricate Distributor Wick and Bushing	Engine Oil—SAE 10W
	Lubricate Distributor Cam	Distributor Cam Grease
	Replace Windshield Wiper Blades	
	Service or Replace Distributor Breaker Points	
	Service or Replace Spark Plugs	
	Cross-Switch Wheels and Tires	
Odometer Reading (Miles)	**Operation**	**Lubricant**
6000	Change Engine Oil and Replace Rotunda Oil Filter *Sustained speeds above 65 mph should be avoided when using SAE 5W engine oils.	Certified Sequence—Tested Engine Oil— SAE 30 or 10W-30 for prevailing temperatures above 90°F SAE 20, 20W, or 10W-30 between 20°F and 90°F SAE 10W or 10W-30 between —10°F and 20°F SAE 5W* or 5W-20 for prevailing temperatures below —10°F Certified sequence—tested engine oils are described on their containers by such phrases as: meets, excels, exceeds, or has proven superior in the test requirements, test sequences, MS Service tests, standards, and service requirements of automotive manufacturers, automakers, car makers, or car manufacturers for MS Service or Service MS.
	Check Cruise-O-Matic Transmission Fluid Level and Add Fluid as Required	Use Rotunda Automatic Transmission Fluid, Ford Part No. C1AZ-19582-B (Ford spec. M2C33-D) for adding or for complete refill. If Rotunda fluid is not available, automatic transmission fluid marked "Type A, Suffix A" may be used to "add to" the factory fill to maintain fluid level.
	Check Power Steering Pump Reservoir Fluid Level and Add Fluid as Required	
	Check Brake Master Cylinder Fluid Level and Add Fluid as Required	FoMoCo or Rotunda Heavy-Duty Brake Fluid Ford, Part No. B7A-19542.
	Check Tension of Fan, Air Conditioner Compressor and Power Steering Pump Drive Belts—Adjust if necessary	
	Check Steering Gear Preload and Backlash—Adjust if Necessary	
	Check Rear Axle Lubricant Level and Add Lubricant as Required	FoMoCo or Rotunda Hypoid Gear Lubricant Ford Engine Sizes / Ford Specification / Ford Part No. 390 4-V / M-2C50-B / C1AZ-19580-E or F 390 6-V / M-2C57-A / C2AZ-19580-D If other specified lubricants are unavailable, M-2C50-B may be used for "adding to", not exceeding one pint in quantity, in all except Equa-Lock axles. For all cars equipped with Equa-Lock axles, regardless of engine size, use M-2C50-B, plus one (1) ounce of M-2C58 additive per pint of M-2C50-B (4 oz. for complete refill). SAE 90 grade lubricants are recommended for all temperatures above —25° F. For temperatures below —25° F, the same type of lubricant, but of an SAE 80 grade, should be used.

MAINTENANCE SCHEDULE (Continued)

Odometer Reading (Miles)	Operation	Lubricant
6000 (continued)	Clean Carburetor Air Cleaner and Filter Element	
	Clean Crankcase Breather Cap	
	Clean Positive Crankcase Ventilation Emission Valve	
	Lubricate Cruise-O-Matic Kickdown Linkage	FoMoCo Ball Joint Grease C1AZ-19590-A. Equivalent substitute lubricants must conform to Ford Specification M-1C47
12,000	Change Engine Oil and Replace Rotunda Oil Filter *Sustained speeds above 65 mph should be avoided when using SAE 5W engine oils.	Certified Sequence—Tested Engine Oil— SAE 30 or 10W-30 for prevailing temperatures above 90°F SAE 20, 20W, or 10W-30 between 20°F and 90°F SAE 10W or 10W-30 between −10°F and 20°F SAE 5W* or 5W-20 for prevailing temperatures below −10°F Certified sequence—tested engine oils are described on their containers by such phrases as: meets, excels, exceeds, or has proven superior in the test requirements, test sequences, MS Service tests, standards, and service requirements of automotive manufacturers, automakers, car makers, or car manufacturers for MS Service or Service MS.
	Check Cruise-O-Matic Transmission Fluid Level and Add Fluid as Required	Use Rotunda Automatic Transmission Fluid, Ford Part No. C1AZ-19582-B (Ford spec. M2C33-D) for adding or for complete refill. If Rotunda fluid is not available, automatic transmission fluid marked "Type A, Suffix A" may be used to "add to" the factory fill to maintain fluid level.
	Check Power Steering Pump Reservoir Fluid Level and Add Fluid as Required	
	Check Brake Master Cylinder Fluid Level and Add Fluid as Required	FoMoCo or Rotunda Heavy-Duty Brake Fluid, Ford Part No. B7A-19542
	Check Rear Axle Lubricant Level and Add Lubricant as Required	FoMoCo or Rotunda Hypoid Gear Lubricant Ford Engine Sizes / Ford Specification / Ford Part No. 390 4-V / M-2C50B / C1AZ-19580-E or F 390 6-V / M-2C57-A / C2AZ-19580-D If other specified lubricants are unavailable, M-2C50-B may be used for "adding to," not exceeding one pint in quantity, in all except Equa-Lock axles. For all cars equipped with Equa-Lock axles, regardless of engine size, use M-2C50-B, plus one (1) ounce of M-2C58 additive per pint of M-2C50-B (4 oz. for complete refill). SAE 90 grade lubricants are recommended for all temperatures above −25°F. For temperatures below −25°F, the same type of lubricant, but of an SAE 80 grade, should be used.
	Check Ignition Timing—Adjust if Necessary	
	Check Parking Brake—Adjust if Necessary	
	Check Front End Alignment—Correct if Necessary	
	Clean Carburetor Air Cleaner and Filter Element	
	Clean Crankcase Breather Cap	
	Clean Positive Crankcase Ventilation Emission Valve and System	
	Clean Body and Door Drain Holes	
	Lubricate Hood Latch and Safety Catch	FoMoCo or Rotunda Silicone Jelly, Ford Part No. COAZ-19553-A.
	Lubricate Door Hinge Pivots and Latch Rotors	FoMoCo or Rotunda Silicone Jelly or Spray, Ford Part No. COAZ-19553-A or B.
	Lubricate Door Locks	FoMoCo or Rotunda Lock Lubricant, Ford Part No. B4A-19587-A
	Lubricate Deck Lid Lock	
	Lubricate Fuel Filler Door Hinges	FoMoCo or Rotunda Silicone Jelly, Ford Part No. COAZ-19553-B.
18,000	Change Engine Oil and Replace Rotunda Oil Filter *Sustained speeds above 65 mph should be avoided when using SAE 5W engine oils.	Certified Sequence—Tested Engine Oil— SAE 30 or 10W-30 for prevailing temperatures above 90°F SAE 20, 20W, or 10W-30 between 20°F and 90°F SAE 10W or 10W-30 between −10°F and 20°F SAE 5W* or 5W-20 for prevailing temperatures below −10°F Certified sequence—tested engine oils are described on their containers by such phrases as: meets, excels, exceeds, or has proven superior in the test requirements, test sequences, MS Service tests, standards, and service requirements of automotive manufacturers, automakers, car makers, or car manufacturers for MS Service or Service MS.

MAINTENANCE SCHEDULE (Continued)

Odometer Reading (Miles)	Operation	Lubricant
18,000 (continued)	Adjust Cruise-O-Matic Bands and Check Fluid Level	Use Rotunda Automatic Transmission Fluid, Ford Part No. C1AZ-19582-B (Ford spec. M2C33-D) for adding or for complete refill. If Rotunda fluid is not available, automatic transmission fluid marked "Type A, Suffix A" may be used to "add to" the factory fill to maintain fluid level.
	Check Power Steering Pump Reservoir Fluid Level and Add Fluid as Required	
	Check Brake Master Cylinder Fluid Level and Add Fluid as Required	FoMoCo or Rotunda Heavy-Duty Brake Fluid, Ford Part No. B7A-19542
	Check Tension of Fan, Air Conditioner Compressor and Power Steering Pump Drive Belts—Adjust if Necessary	
	Check Rear Axle Lubricant Level and Add Lubricant as Required	FoMoCo or Rotunda Hypoid Gear Lubricant Ford Engine Sizes / Ford Specification / Ford Part No. 390 4-V / M-2C50-B / C1AZ-19580-E or F 390 6-V / M-2C57-A / C2AZ-19580-D If other specified lubricants are unavailable, M-2C50-B may be used for "adding to," not exceeding one pint in quantity, in all except Equa-Lock axles. For all cars equipped with Equa-Lock axles, regardless of engine size, use M-2C50-B, plus one (1) ounce of M-2C58 additive per pint of M-2C50-B (4 oz. for complete refill). SAE 90 grade lubricants are recommended for all temperatures above —25°F. For temperatures below —25°F, the same type of lubricant, but of an SAE 80 grade, should be used.
	Clean Carburetor Air Cleaner and Filter Element	
	Clean Crankcase Breather Cap	
	Clean Positive Crankcase Ventilation Emission Valve	
	Lubricate Cruise-O-Matic Kickdown Linkage	FoMoCo Ball Joint Grease C1AZ-19590-A. Equivalent substitute lubricants must conform to Ford Specification M-1C47.
24,000	Change Engine Oil and Replace Rotunda Oil Filter *Sustained speeds above 65 mph should be avoided when using SAE 5W engine oils.	Certified Sequence—Tested Engine Oil— SAE 30 or 10W-30 for prevailing temperatures above 90°F SAE 20, 20W, or 10W-30 between 20°F and 90°F SAE 10W or 10W-30 between —10°F and 20°F SAE 5W* or 5W-20 for prevailing temperatures below —10°F Certified sequence—tested engine oils are described on their containers by such phrases as: meets, excels, exceeds, or has proven superior in the test requirements, test sequences, MS Service tests, standards, and service requirements of automotive manufacturers, automakers, car makers, or car manufacturers for MS Service or Service MS
	Check Cruise-O-Matic Transmission Fluid Level and Add Fluid as Required	Use Rotunda Automatic Transmission Fluid, Ford Part No. C1AZ-19582-B (Ford spec. M2C33-D) for adding or for complete refill. If Rotunda fluid is not available, automatic transmission fluid marked "Type A, Suffix A" may be used to "add to" the factory fill to maintain fluid level
	Check Power Steering Pump Reservoir Fluid Level and Add Fluid as Required	
	Check Brake Master Cylinder Fluid Level and Add Fluid as Required	FoMoCo or Rotunda Heavy-Duty Brake Fluid, Ford Part No. B7A-19542
	Check Rear Axle Lubricant Level and Add Lubricant as Required	FoMoCo or Rotunda Hypoid Gear Lubricant Ford Engine Sizes / Ford Specification / Ford Part No. 390 4-V / M-2C50-B / C1AZ-19580-E or F 390 6-V / M-2C57-A / C2AZ-19580-D If other specified lubricants are unavailable, M-2C50-B may be used for "adding to," not exceeding one pint in quantity, in all except Equa-Lock axles. For all cars equipped with Equa-Lock axles, regardless of engine size, use M-2C50-B, plus one (1) ounce of M-2C58 additive per pint of M-2C50-B (4 oz. for complete refill). SAE 90 grade lubricants are recommended for all temperatures above —25°F. For temperatures below —25°F, the same type of lubricant, but of an SAE 80 grade, should be used.

MAINTENANCE SCHEDULE (Continued)

Odometer Reading (Miles)	Operation	Lubricant
24,000 (continued)	Check Ignition Timing—Adjust if Necessary	
	Check Parking Brake—Adjust if Necessary	
	Check Front End Alignment—Correct if Necessary	
	Clean Carburetor Air Cleaner and Filter Element	
	Clean Crankcase Breather Cap	
	Clean Positive Crankcase Ventilation Emission Valve and System	
	Clean Body and Door Drain Holes	
	Lubricate Hood Latch and Safety Catch	FoMoCo or Rotunda Silicone Jelly, Ford Part No. COAZ-19553-A.
	Lubricate Door Hinge Pivots and Latch Rotors	FoMoCo or Rotunda Silicone Jelly or Spray, Ford Part No. COAZ-19553-A or B.
	Lubricate Door Locks	FoMoCo or Rotunda Lock Lubricant, Ford Part No. B4A-19587-A.
	Lubricate Deck Lid Lock	FoMoCo or Rotunda Lock Lubricant, Ford Part No. B4A-19587-A.
	Lubricate Fuel Filler Door Hinges	FoMoCo or Rotunda Silicone Jelly, Ford Part No. COAZ-19553-C.
	Lubricate and Adjust Front Wheel Bearings	FoMoCo Wheel Bearing Grease, Ford Part No. C2AZ-19585-A.
	Check Brake Lines and Linings	
30,000	Change Engine Oil and Replace Rotunda Oil Filter *Sustained speeds above 65 mph should be avoided when using SAE 5W engine oils.	Certified Sequence—Tested Engine Oil— SAE 30 or 10W-30 for prevailing temperatures above 90°F SAE 20, 20W, or 10W-30 between 20°F and 90°F SAE 10W or 10W-30 between −10°F and 20°F SAE 5W* or 5W-20 for prevailing temperatures below −10°F Certified sequence—tested engine oils are described on their containers by such phrases as: meets, excels, exceeds, or has proven superior in the test requirements, test sequences, MS Service tests, standards, and service requirements of automotive manufacturers, automakers, car makers, or car manufacturers for MS Service or Service MS.
	Check Cruise-O-Matic Transmission Fluid Level and Add Fluid as Required	Use Rotunda Automatic Transmission Fluid, Ford Part No. C1AZ-19582-B (Ford spec. M2C33-D) for adding or for complete refill. If Rotunda fluid is not available, automatic transmission fluid marked "Type A, Suffix A" may be used to "add to" the factory fill to maintain fluid level.
	Check Power Steering Pump Reservoir Fluid Level and Add Fluid as Required	
	Check Brake Master Cylinder Fluid Level and Add Fluid as Required	FoMoCo or Rotunda Heavy-Duty Brake Fluid, Ford Part No. B7A-19542.
	Check Tension of Fan, Air Conditioner Compressor and Power Steering Pump Drive Belts. Adjust if Necessary	
	Check Rear Axle Lubricant Level and Add Lubricant as Required	FoMoCo or Rotunda Hypoid Gear Lubricant Ford Engine Sizes — Ford Specification — Ford Part No. 390 4-V — M-2C50-B — C1AZ-19580-E or F 390 6-V — M-2C57-A — C2AZ-19580-D If other specified lubricants are unavailable M-2C50-B may be used for "adding to," not exceeding one pint in quantity, in all except Equa-Lock axles. For all cars equipped with Equa-Lock axles, regardless of engine size, use M-2C50-B, plus one (1) ounce of M-2C58 additive per pint of M-2C50-B (4 oz. for complete refill). SAE 90 grade lubricants are recommended for all temperatures above −25°F. For temperatures below −25°F. the same type of lubricant, but of an SAE 80 grade, should be used.
	Replace Carburetor Air Cleaner Filter Element	
	Clean Crankcase Breather Cap	
	Clean Positive Crankcase Ventilation Emission Valve	
	Lubricate Cruise-O-Matic Kickdown Linkage	Ford Ball Joint Grease C1AZ-19590-A. Equivalent substitute lubricants must conform to Ford Specification M-IC47

MAINTENANCE SCHEDULE (Continued)

Odometer Reading (Miles)	Operation	Lubricant
36,000	Change Engine Oil and Replace Rotunda Oil Filter *Sustained speeds above 65 mph should be avoided when using SAE 5W engine oils.	Certified Sequence—Tested Engine Oil— SAE 30 or 10W-30 for prevailing temperatures above 90°F SAE 20, 20W, or 10W-30 between 20°F and 90°F SAE 10W or 10W-30 between —10°F and 20°F SAE 5W* or 5W-20 for prevailing temperatures below —10°F Certified sequence—tested engine oils are described on their containers by such phrases as: meets, excels, exceeds or has proven superior in the test requirements, test sequences, MS Service tests, standards and service requirements of automotive manufacturers, automakers, car makers, or car manufacturers for MS Service or Service MS
	Adjust Cruise-O-Matic Bands and Check Fluid Level	Use Rotunda Automatic Transmission Fluid, Ford Part No. C1AZ-19582-B (Ford spec. M2C33-D) for adding or for complete refill. If Rotunda fluid is not available, automatic transmission fluid marked "Type A, Suffix A" may be used to "add to" the factory fill to maintain fluid level.
	Check Power Steering Pump Reservoir Fluid Level and Add Fluid as Required	
	Check Brake Master Cylinder Fluid Level and Add Fluid as Required	FoMoCo or Rotunda Heavy-Duty Brake Fluid Ford Part No. B7A-19542
	Check Tension of Fan, Air Conditioner Compressor and Power Steering Pump Drive Belts—Adjust if Necessary	
	Check Rear Axle Lubricant Level and Add Lubricant as Required	FoMoCo or Rotunda Hypoid Gear Lubricant Ford Engine Sizes / Ford Specification / Ford Part No. 390 4-V / M-2C50-B / C1AZ-19580-E or F 390 6-V / M-2C57-A / C2AZ-19570-D If other specified lubricants are unavailable, M-2C50-B may be used for "adding to," not exceeding one pint in quantity, in all except Equa-Lock axles. For all cars equipped with Equa-Lock axles, regardless of engine size, use M-2C50-B, plus one (1) ounce of M-2C58 additive per pint of M-2C50-B (4 oz. for complete refill). SAE 90 grade lubricants are recommended for all temperatures above —25°F. For temperatures below —25°F, the same type of lubricant, but of an SAE 80 grade, should be used.
	Check Ignition Timing—Adjust if Necessary	
	Check Parking Brake—Adjust if Necessary	
	Check Front End Alignment—Correct if Necessary	
	Clean Carburetor Air Cleaner and Filter Element	
	Clean Crankcase Breather Cap	
	Clean Positive Crankcase Ventilation Emission Valve and System	
	Clean Body and Door Drain Holes	
	Lubricate Hood Latch and Safety Catch	FoMoCo or Rotunda Silicone Jelly, Ford Part No. COAZ-19553-A.
	Lubricate Door Hinge Pivots	FoMoCo or Rotunda Silicone Jelly or Spray, Ford Part No. COAZ-19553-A or B.
	Lubricate Door Locks	FoMoCo or Rotunda Lock Lubricant, Ford Part No. B4A-19587-A.
	Lubricate Deck Lid Lock	
	Lubricate Fuel Filler Door Hinges	FoMoCo or Rotunda Silicone Jelly, Ford Part No. COAZ-19553-B.
	Replace Fuel Filter	
	Replace Engine Coolant	Use Ford Rotunda Permanent Anti-Freeze
	Replace Power Steering Filter Element	
36 MONTHS OR 100,000 MILES	Lubricate Universal Joints	FoMoCo Universal Joint Grease Ford Part No. B8A-19589-A.
	Lubricate Front Suspension Ball Joints	FoMoCo Ball Joint Grease Ford Part No. C1AZ-19590-A
	Lubricate Steering Linkage	

MAINTENANCE OPERATIONS (PART 12-2)

MAINTENANCE OPERATIONS

CHECK CRUISE-O-MATIC TRANSMISSION FLUID LEVEL	With the engine running at idle speed, the fluid at a normal operating temperature, and the transmission selector lever at P (park), the fluid level should be maintained at the full mark on the	dipstick. See Part 5-2 of the 1962 Thunderbird Shop Manual for complete procedure on checking and adding fluid.
CHECK POWER STEERING RESERVOIR FLUID LEVEL	The fluid level in the reservoir should be maintained 1 inch from the top. The fluid should be at normal operat-	ing temperature before checking the level.
CHECK BRAKE MASTER CYLINDER FLUID LEVEL	The fluid level should be maintained ⅜ inch below the top of the filler opening.	
CHECK REAR AXLE LUBRICANT LEVEL	The lubricant level should be maintained at the bottom of the filler hole.	
CLEAN CARBURETOR AIR CLEANER ELEMENT	Remove the element from the air cleaner body, and direct clean compressed air against the element in the opposite direction of normal air flow	from the inside out. Clean the air cleaner body and cover in solvent, and wipe them dry.
CLEAN CRANKCASE BREATHER CAP AND POSITIVE CRANKCASE VENTILATION SYSTEM.	Remove the breather cap and wash it in solvent. Remove the crankcase ventilation emission valve, exhaust tube, and connections. Clean the valve and exhaust tube in clean carburetor	solvent, and dry them with compressed air. Clean the rubber hose connections with a low volatility petroleum base solvent, and dry them with compressed air.
LUBRICATE FRONT SUSPENSION BALL JOINTS	Apply the recommended lubricant to each ball joint fitting with a pressure gun. Then replace the plugs.	
LUBRICATE STEERING LINKAGE	Apply the recommended lubricant to each steering linkage fitting with a pressure gun. Then replace the plugs.	
LUBRICATE DRIVE SHAFT UNIVERSAL JOINTS	Remove plugs. Lubricate the universal joints with the recommended lubricant. Replace plugs.	
LUBRICATE AND ADJUST FRONT WHEEL BEARINGS	Front wheel bearing adjustment information is provided in Part 8-1 of the 1962 Thunderbird Shop Manual.	
LUBRICATE FUEL FILLER DOOR HINGES	Apply lubricant, and wipe clean.	
LUBRICATE DOOR HINGE PIVOTS AND LATCH ROTORS	Spray all points of friction.	
LUBRICATE HOOD LATCH AND SAFETY CATCH	Apply lubricant to all points of contact.	
LUBRICATE DECK LID LATCH	Apply lubricant to all points of contact.	
LUBRICATE DOOR LOCKS	Apply lubricant, and wipe clean.	

MAINTENANCE OPERATIONS (Continued)

LUBRICATE DECK LID LOCK	Apply lubricant and wipe clean.	
CHANGE ENGINE OIL AND REPLACE ROTUNDA OIL FILTER	Drain the oil from the crankcase, and remove and discard the oil filter. Install a new Rotunda filter, and fill the crankcase to the full mark on the oil	level dipstick. Run the engine at idle speed and check for oil leaks at the filter and drain plug. Recheck the oil level and add oil if necessary.
REPLACE FUEL FILTER	Complete procedures for replacing fuel filter are given in Part 3-1 of the	1962 Thunderbird Shop Manual.
REPLACE CARBURETOR AIR CLEANER ELEMENT	Remove the air cleaner from the carburetor. Clean the air cleaner body.	Insert a new element and assemble the components.
ADJUST STEERING GEAR PRELOAD AND BACKLASH	Complete steering gear adjustment procedures are given in Part 8-1 of the	1962 Thunderbird Shop Manual.
INSPECT AND ADJUST BRAKES	Remove one wheel and drum, and inspect the drum and linings for wear or damage. Scored drums should be	repaired. Reline or replace the brake shoes if the linings are worn to within 1/32 inch of any rivet.
CROSS-SWITCH WHEELS AND TIRES	All tires, including the spare, should be cross-switched as shown in Part 8-1	of the 1962 Thunderbird Shop Manual.
PERFORM SELECTAIRE SEASONAL SERVICES	Check the air conditioner system for refrigerant or oil leaks, and for the state of refrigerant charge.	

SPECIAL TOOLS (PART 12-3)

TRANSMISSION

Tool No.	Source	Tool Name and Purpose
1175-AB	Manzel	Cruise-O-Matic Front Pump and Extension Housing Oil Seal and Steering Gear Lower Worm Bearing Cup Remover
7000-CJ	Manzel	Transmission Assembly and Disassembly Holder
7000-DD	Manzel	Air Nozzle Tip
7000-DE	Manzel	Air Nozzle Assembly with Rubber Tip
7000-E	Manzel	Transmission High Jack
7000-EG	Manzel	Universal Adapter for 7000-E
7000-H	Manzel	Oil Drain Can with Removable Filter
7064	Manzel	Snap Ring Pliers
7975	Manzel	Transmission to Converter Assembly Guide Pin
77530-A	Manzel	Primary, Secondary Clutches & Converter Assembly Holder
77763	Manzel	Throttle Valve Stop Bending Tool
77869-A	Manzel	Rear Pump Discharge Tube Remover and Replacer

FRONT SUSPENSION

Tool No.	Source	Tool Name and Purpose
2086-L	Manzel	Brake Shoe Return Spring Remover and Replacer
3590-FC	Manzel	Steering Arm Remover
3600-AA	Manzel	Steering Wheel Remover
CJ-94	Snap-On	Steering Arm Remover

BRAKES

Tool No.	Source	Tool Name and Purpose
1112-144	Milbar	Snap Torque Wrench for Brake Lines at Wheel Cylinder

ENGINE

Tool No.	Source	Tool Name and Purpose
835	K. R. Wilson	Engine Stand (Existing)*
1009	K. R. Wilson	Engine Stand (New)*
3600-E	Manzel	Piston Pull Scale
6001-102	Manzel	Outboard Support (For 6001-ES Stand)
6001-AF	Manzel	Engine to Twin Post Stand Adapters
6001-TES	Manzel	Engine Stand (New)
6392-N	K. R. Wilson	Flywheel Housing Check Adapter Plate†
6505-F	Manzel	Valve Stem Clearance Gauge
6513-CE-2	Manzel	Exhaust Valve Micrometer
7513-EE	Manzel	Valve Spring Compressor
12132	Manzel	Distributor Shaft Bushing Burnisher
12132-A	Manzel	Distributor Shaft Bushing Replacer
12132-H	Manzel	Distributor Shaft Bushing Remover
12150-E	Manzel	Distributor Adjustment Wrench
LM-106	Manzel	Valve Spring Tester
RC-500	Snap-On	Ring Groove Cleaner

*No longer available; those still in use will handle 1963 engines. Manzel tools 6001-102, 6001-AF, and 6001-TES will replace. †Same as 835 and 1009, as to availability and usability but Ford Tooling will replace.

REAR AXLE AND SUSPENSION

Tool No.	Source	Tool Name and Purpose
951	Owatonna	Universal Bearing Remover
1175-AB	Manzel	
1177	Manzel	Axle Shaft Oil Seal Replacer
4201-C	Manzel	Ring Gear Backlash Indicator
4245-B	Manzel	Axle Bearing Oil Seal Replacer
4858-E	Manzel	Companion Flange and Pinion Bearing Replacer
CJ-951	Snap-On	Universal Bearing Remover

BODY

Tool No.	Source	Tool Name and Purpose
59538-A	Snap-On	Door Handle Tool

GROUP 13 — SPECIFICATIONS

NOTE: All Specifications are given in inches unless otherwise noted.

ENGINE AND EXHAUST SYSTEM

GENERAL

ENGINE MODELS AND PISTON DISPLACEMENT—Cubic Inches
Thunderbird Special (4-V) 390
Thunderbird High Performance V-8 (6-V) 390

COMPRESSION RATIO
390 4-V and 6-V 10.5:1

BRAKE HORSEPOWER @ Specified RPM
390 4-V ..... 300 @ 4600
390 6-V ..... 340 @ 5000

TORQUE—Ft-Lbs @ Specified RPM
390 4-V ..... 427 @ 2800
390 6-V ..... 430 @ 3200

BORE AND STROKE—Inches
390 ..... 4.05 x 3.78

COMPRESSION PRESSURE—Sea Level @ CRANKING SPEED
390 160-200

TAXABLE HORSEPOWER
390 ..... 52.49

FIRING ORDER
390 1-5-4-2-6-3-7-8

VALVE ARRANGEMENT—Front to Rear
390 ..... E-I-E-I-I-E-I-E

ENGINE IDLE RPM*
Cruise-O-Matic (Drive Range)
390 475-500
*If equipped with air conditioner, it should be run for at least 20 minutes before setting idle speed.

ENGINE IDLE MANIFOLD VACUUM—Minimum Inches of Mercury @ Specified Engine Neutral Idle rpm—SEA LEVEL
390 18

INITIAL IGNITION TIMING—BTDC
390—Cruise-O-Matic 4-V and 6-V ..... 6°
The initial ignition timing may be advanced 5° over the recommended setting. To do this, advance the timing progressively until engine detonation (spark knock) is evident under actual road test acceleration. Retard the timing until the detonation is eliminated. If the individual requirements of the car and/or if substandard fuels are used, the initial timing may be retarded from the recommended setting not to exceed 2° BTDC.

CRANKCASE OIL CAPACITY*
390 ..... 5 quarts
*Add one quart extra when changing oil filter.

OIL PRESSURE—Psi hot @ 2000 rpm
390 4-V 35-55
390 6-V 45-70

CYLINDER HEAD

GASKET SURFACE FLATNESS
0.003 inch in any 6 inches or 0.006 inch overall

VALVE GUIDE BORE STANDARD DIAMETER
Intake and Exhaust
390 ..... 0.3728-0.3735

VALVE SEAT WIDTH
Intake and Exhaust
390 ..... 0.070-0.090

VALVE SEAT ANGLE
Intake and Exhaust
390 ..... 45°

VALVE SEAT RUNOUT
390 ..... 0.002—Wear Limit 0.0025

COMBUSTION CHAMBER VOLUME—CC
390 4-V 73.1-76.1
390 6-V 64.55-67.55

VALVE MECHANISM

VALVE CLEARANCE*
390 ..... 0.078-0.218
*Hydraulic valve lifters—Clearance specified is obtained at the valve stem tip with the lifter collapsed.

VALVE STEM DIAMETER
Standard
Intake
390 ..... 0.3711-0.3718
Exhaust
390 ..... 0.3693-0.3700
0.003 Oversize
Intake
390 ..... 0.3741-0.3748
Exhaust
390 ..... 0.3723-0.3730
0.015 Oversize
Intake
390 ..... 0.3861-0.3868
Exhaust
390 ..... 0.3843-0.3850
0.030 Oversize
Intake
390 ..... 0.4011-0.4018
Exhaust
390 ..... 0.3993-0.4000

VALVE MECHANISM (Continued)

VALVE STEM TO VALVE GUIDE CLEARANCE
Intake
390 ..... 0.0010-0.0024—Wear Limit 0.0045
Exhaust
390 ..... 0.0028-0.0042—Wear Limit 0.0055

VALVE HEAD DIAMETER
Intake
390 ..... 2.022-2.037
Exhaust
390 ..... 1.551-1.566

VALVE FACE ANGLE
390 ..... 44°

INTAKE AND EXHAUST VALVE FACE RUNOUT
390 ..... 0.002

VALVE SPRING APPROXIMATE FREE LENGTH
390 4-V 2.15
390 6-V 2.06

VALVE SPRING MAXIMUM OUT-OF-SQUARE
390 ..... 0.072

VALVE SPRING PRESSURE (LBS.) @ SPECIFIED LENGTH
390 4-V ..... 74-84 @ 1.820
Wear Limit 67 @ 1.820
190-208 @ 1.420
Wear Limit 171 @ 1.420
390 6-V ..... 80-90 @ 1.820
Wear Limit 72 @ 1.820
255-280 @ 1.320
Wear Limit 230 @ 1.320

VALVE SPRING ASSEMBLED HEIGHT
390 ..... 1-13/16—1-27/32

VALVE PUSH ROD RUNOUT
390 ..... 0.025

VALVE TAPPET STANDARD DIAMETER
390 ..... 0.8740-0.8745

VALVE TAPPET TO TAPPET BORE CLEARANCE
390 ..... 0.0005-0.0020

HYDRAULIC VALVE LIFTER LEAK DOWN RATE
390 ..... 10-100 Seconds

ROCKER ARM TO ROCKER SHAFT CLEARANCE
390 ..... 0.0035-0.0055—Wear Limit 0.0065

ROCKER ARM SHAFT OUTSIDE DIAMETER
390 ..... 0.8385-0.8395

ROCKER SHAFT BORE DIAMETER
390 ..... 0.843-0.844

CAMSHAFT AND TIMING CHAIN

CAMSHAFT JOURNAL STANDARD DIAMETER
390 ..... 2.1238-2.1248

CAMSHAFT JOURNAL RUNOUT
390 ..... 0.005

CAMSHAFT JOURNAL TO BEARING CLEARANCE
390 ..... 0.001-0.003—Wear Limit 0.006

TIMING CHAIN DEFLECTION—INCHES
390 ..... 0.5

INTAKE AND EXHAUST CAMSHAFT LOBE LIFT
390 (4-V) ..... 0.2316—Wear Limit 0.2266
390 (6-V) ..... 0.2576—Wear Limit 0.2526

MAXIMUM ALLOWABLE LOBE LIFT LOSS
390—Intake and Exhaust 0.005

CAMSHAFT BEARINGS

INSIDE DIAMETER
390 ..... 2.1258-2.1268

LOCATION IN RELATION TO FRONT FACE OF BLOCK CAM BEARING BORE—NO. 1 BEARING ONLY—BELOW
390 ..... 0.005-0.020

CRANKSHAFT

MAIN BEARING JOURNAL STANDARD DIAMETER
390 (Coded Red) 2.7488-2.7492
(Coded Blue) 2.7484-2.7488

MAIN BEARING JOURNAL MAXIMUM RUNOUT
390 ..... 0.002—Wear Limit 0.003

CONNECTING ROD AND MAIN BEARING JOURNALS MAXIMUM OUT-OF-ROUND
390 ..... 0.0004

CONNECTING ROD AND MAIN BEARING JOURNALS TAPER
390 ..... 0.0003 per inch

THRUST BEARING JOURNAL LENGTH
390 ..... 1.124-1.126

MAIN BEARING JOURNAL THRUST FACE RUNOUT
390 ..... 0.001

CONNECTING ROD JOURNAL DIAMETER
390 (Coded Red) 2.4384-2.4388
(Coded Blue) 2.4380-2.4384

CRANKSHAFT FREE END PLAY
390 ..... 0.004-0.008—Wear Limit 0.012

ASSEMBLED FLYWHEEL CLUTCH FACE RUNOUT
390 ..... 0.010

ASSEMBLED FLYWHEEL RUNOUT
390 ..... 0.007

ASSEMBLED SPROCKET OR GEAR FACE RUNOUT
390 ..... 0.006

MAIN BEARINGS

JOURNAL CLEARANCE	
390	0.0006-0.0031

CONNECTING ROD

PISTON PIN BORE OR BUSHING—INSIDE DIAMETER	
Standard	
390	0.9752-0.9755
PISTON PIN BUSHING MAXIMUM OUT-OF-ROUND	
390	0.0004
PISTON PIN BUSHING MAXIMUM TAPER	
390	0.0003
BEARING BORE DIAMETER	
390 (Coded Red)	2.5907-2.5911
(Coded Blue)	2.5911-2.5915
BEARING BORE MAXIMUM OUT-OF-ROUND AND TAPER	
390	0.0004
CONNECTING ROD CENTER-TO-CENTER LENGTH	
390	6.486-6.490
CONNECTING ROD	
Twist Total Difference—Maximum	
390	0.012
Bend Total Difference—Maximum	
390	0.004
CONNECTING ROD ASSEMBLY—Assembled to crankshaft	
Side Clearance	
390	0.006-0.016—Wear Limit 0.019

CONNECTING ROD BEARINGS

BEARING TO CRANKSHAFT CLEARANCE	
390	0.0007-0.0028

PISTON

PISTON DIAMETER	
Red Color Code	
390	4.0477-4.0483
Blue Color Code	
390	4.0489-4.0495
0.003 Oversize	
390	4.0501-4.0507
PISTON TO BORE CLEARANCE ¼ INCH FROM BOTTOM OF SKIRT	
390	0.0017-0.0035—Wear Limit 0.006

PISTON PIN

PISTON PIN DIAMETER	
Standard	
390	0.9750-0.9753
0.001 Oversize	
390	0.9760-0.9763
0.002 Oversize (Color Coded Yellow)	
390	0.9770-0.9773
PISTON PIN LENGTH	
390	3.156-3.170
PISTON PIN TO PISTON CLEARANCE	
390	0.0001-0.0003—Wear Limit 0.0008
PISTON PIN TO CONNECTING ROD BUSHING CLEARANCE	
390	0.0001-0.0005—Wear Limit 0.001

PISTON RINGS

RING WIDTH	
Upper Compression Ring	
390	0.0774-0.0781
Lower Compression Ring	
390	0.0930-0.0940
SIDE CLEARANCE	
Upper Compression Ring	
390	0.0024-0.0041—Wear Limit 0.006
Lower Compression Ring	
390	0.002-0.004—Wear Limit 0.006
Oil Ring	
390	Snug
RING GAP WIDTH	
Compression Ring (Standard Bore—Upper and Lower)	
390	0.015-0.025
Oil Ring (Standard Bore)*	
390	0.015-0.055

*Steel rail

CYLINDER BLOCK

CYLINDER BORE DIAMETER	
390	4.0500-4.0524
CYLINDER BORE MAXIMUM OUT-OF-ROUND	
390	0.001—Wear Limit 0.003
CYLINDER BORE TAPER	
390	0.001—Wear Limit 0.005
HEAD GASKET SURFACE FLATNESS	
390	0.003 inch in any 6 inches or 0.006 inch overall

OIL PUMP

RELIEF VALVE SPRING TENSION—LBS @ SPECIFIED LENGTH	
390	9.0-9.6 . . 1.53 inches
RELIEF VALVE CLEARANCE	
390	0.0015-0.0029
DRIVE SHAFT TO HOUSING BEARING CLEARANCE	
390	0.0015-0.0029
ROTOR ASSEMBLY END CLEARANCE—PUMP ASSEMBLED	
390	0.0011-0.0041
OUTER RACE TO HOUSING—RADIAL CLEARANCE	
390	0.006-0.012
DRIVE SHAFT LENGTH—ROTOR ASSEMBLY FACE TO SHAFT END	
390	2.24-2.26

TORQUE LIMITS (Ft-lbs)

MAIN BEARING CAP BOLTS—OILED THREADS	
390	95-105
CYLINDER HEAD BOLTS—OILED THREADS	
390	80-90
OIL PAN TO CYLINDER BLOCK	
390	9-13
MANIFOLDS TO CYLINDER HEAD	
Intake	
390	32-35
Exhaust	
390	12-18
FLYWHEEL TO CRANKSHAFT	
390	75-85
OIL PUMP TO CYLINDER BLOCK	
390	23-28
OIL PUMP COVER PLATE	
390	6-9
OIL FILTER ANGLE ADAPTER TO CYLINDER BLOCK	
390	12-15

TORQUE LIMITS (Ft-lbs) (Continued)

CYLINDER FRONT COVER	
390	12-15
WATER OUTLET HOUSING	
390	12-15
WATER PUMP TO CYLINDER BLOCK OR FRONT COVER	
390	23-28
CAMSHAFT SPROCKET TO CAMSHAFT	
390	35-45
DAMPER OR PULLEY TO CRANKSHAFT	
390	70-90
CONNECTING ROD NUTS	
390	40-45
VALVE ROCKER ARM COVER	
390	4-7
VALVE ROCKER SHAFT SUPPORT TO CYLINDER HEAD	
390	40-45
OIL PICK-UP TUBE TO OIL PUMP	
390	12-15
FUEL PUMP TO CYLINDER BLOCK OR CYLINDER FRONT COVER	
390	23-28
ENGINE SUPPORT	
Front Insulator to Engine	
390	35-40
Front Insulator to Intermediate Bracket	
390	45-60
Intermediate Bracket to Cross Member	
390	45-60
Support Retainer to Extension Housing	
390	35-45
Support to End Bracket	
390	30-42

STANDARD TORQUE LIMITS FOR VARIOUS SIZE BOLTS

CAUTION: Special torque limits listed in the preceding tables should be used in preference to these standard limits wherever they apply.

Size (Inches)	1/4-20	1/4-28	5/16-18	5/16-24	3/8-16	3/8-24
Torque (Foot-Pounds)	6-9	6-9	12-15	15-18	23-28	30-35
Size (Inches)	7/16-14	7/16-20	1/2-13	1/2-20	9/16-18	5/8-18
Torque (Foot-Pounds)	45-50	50-60	60-70	70-80	85-95	130-145

IGNITION SYSTEM

DISTRIBUTOR

GENERAL

Breaker Arm Spring Tension (Ounces)	17-20
Contact Spacing (Inches)	0.014-0.016
Dwell Angle at Idle Speed	26°-28½°

GEAR LOCATION DIMENSION

Distance from bottom of mounting flange to bottom of gear (Inches)	3.077-3.071

SHAFT END PLAY CLEARANCE (INCHES)

390 Engine	0.022-0.030

ADVANCE CHARACTERISTICS

Note: The advance characteristics given apply to the distributor with the indicated number only. The distributor number is stamped on the distributor housing or on a plate attached to the distributor housing.

DISTRIBUTOR NO. C2SF-12127-A (4-V)

CENTRIFUGAL ADVANCE. Set test stand to 0° @ 250 rpm. Disconnect the vacuum line.

Distributor RPM	Advance (Degrees)	Vacuum (Inches of Mercury)
325	0	0
425	1¼-2¼	0
550	5-6	0
700	7½-8½	0
2000	13-14½	0

VACUUM ADVANCE. Set test stand to 0° @ 1000 rpm and 0 inches of vacuum.

Distributor RPM	Advance (Degrees)	Vacuum (Inches of Mercury)
1000	0-2½	6
1000	4-7	10
1000	5½-8½	15

Maximum Advance Limit @ 20 HG ..... 8½°

ADVANCE CHARACTERISTICS (Continued)

DISTRIBUTOR NO. C2SF-12127-B (6-V)

CENTRIFUGAL ADVANCE. Set test stand to 0° @ 250 rpm and 0 inches of vacuum.

Distributor RPM	Advance (Degrees)	Vacuum (Inches of Mercury)
325	0	0
425	1¼-2¼	0
550	5-6	0
700	7½-8½	0
1250	9-10¼	0
2000	11¼-12¾	0

VACUUM ADVANCE. Set test stand to 0° @ 1000 rpm and 0 inches of vacuum.

Distributor RPM	Advance (Degrees)	Vacuum (Inches of Mercury)
1000	0-2½	6
1000	4-7	10
1000	5½-8½	15

Maximum Advance Limit @ 20 HG ..... 8½°

CONDENSER

Capacity (Microfarads)	0.21-0.25
Minimum Leakage (Megohms)	5
Maximum Series Resistance (Ohms)	1

COIL

Primary Resistance (Ohms)*	1.40-1.54 (75°F.)
Secondary Resistance (Ohms)	8000-8800 (75°F.)
Amperage Draw	
Engine Stopped	4.5
Engine Idling	2.5
*Primary Circuit Resistor	1.30-1.40 (75°F.)

SPARK PLUGS

Type (4-V)	Autolite BF-42
Type (6-V)	Autolite BF-32
Gap (Inches)	0.035
Torque (Ft-lbs)	15-20*

*When a new spark plug is installed in a new replacement cylinder head torque the spark plugs to 20-30 ft-lbs.

FUEL SYSTEM

FUEL PUMP

FUEL PUMP STATIC PRESSURE (PSI AT 500 ENGINE RPM)
390 ..... 4.5-6.5

MINIMUM FUEL PUMP VOLUME (FLOW AT 500 ENGINE RPM)
390 ..... 1 pint within 20 seconds

MINIMUM INTAKE VACUUM (INCHES OF MERCURY @ 500 ENGINE RPM)
390 ..... 6.0

ECCENTRIC TOTAL LIFT
390 ..... 0.690-0.710 inch

CARBURETOR

390 V-8 4-V (Carburetor No. C3SF-9510-A)

MAIN METERING JET IDENTIFICATION NO.

PRIMARY
- 0-5,000 Feet 54
- 5,000-10,000 Feet 52
- 10,000-15,000 Feet 50

SECONDARY
- 0-5,000 Feet 62
- 5,000-10,000 Feet 60
- 10,000-15,000 Feet 58

POWER VALVE IDENTIFICATION NO.
- 0-5,000 Feet ..... Plain
- 5,000-10,000 Feet 65
- 10,000-15,000 Feet 55

DRY FLOAT INITIAL SETTING
PRIMARY AND SECONDARY
- 47/64 ± 1/64 inch from the machined surface of the main body to the top of the free end of the float, with the float in the uppermost position.

FUEL LEVEL SETTING
PRIMARY AND SECONDARY
- 63/64 ± 1/32 inch below the top machined surface of the main body.

VENTURI SIZE
- PRIMARY 1 1/8
- SECONDARY 1 3/16

CHOKE THERMOSTATIC SPRING HOUSING INITIAL SETTING
- Set at 2 digits in the lean direction.

ANTI-STALL DASHPOT CLEARANCE .. 0.060-0.090

INITIAL IDLE MIXTURE ADJUSTMENT ..... 1-1½ turns open

CARBURETOR (Continued)

FAST (COLD) IDLE ADJUSTMENT (with fast idle screw on the kickdown step of the cam) (hot engine) ..... 1500 RPM

POWER VALVE OPENS AT .. 7-10 inches of mercury

390 V-8 (6-V)
- Primary ..... (C2SE-9510-A)
- Secondary—Front ..... (C2SE-9510-E)
- Secondary—Rear ..... (C2SE-9510-B)

MAIN METERING JET IDENTIFICATION NO.
- Primary Carburetor 57
- Secondary Carburetors 60

POWER VALVE IDENTIFICATION NO.
- Primary Carburetor Only 65

DRY FLOAT INITIAL SETTING
PRIMARY AND SECONDARY
- Top of float to be parallel with top of fuel bowl with bowl inverted.

FUEL LEVEL SETTING
PRIMARY AND SECONDARY
- Lower edge of sight plug opening ± 1/16

VENTURI SIZE
- PRIMARY 1 1/8
- SECONDARY 1 3/16

CHOKE THERMOSTATIC SPRING HOUSING INITIAL SETTING
- Primary Only ..... At Index

ANTI-STALL DASHPOT CLEARANCE
- Front Secondary Only 0.060-0.090

INITIAL IDLE MIXTURE ADJUSTMENT
- Primary ..... 1-1½ turns open
- Secondary ..... ¾-1¼ turns open

FAST (COLD) IDLE ADJUSTMENT (with fast idle screw on the kickdown step of the cam) (hot engine) ..... 1800 RPM

POWER VALVE OPENS AT ..... 7½-10½ inches of mercury

CHOKE PLATE CLEARANCE
- 390 4-V 5/32
- 390 6-V 7/64

FUEL TANK CAPACITY

390 ..... 20 gallons

COOLING SYSTEM

WATER PUMP, DRIVE BELTS, AND THERMOSTATS

WATER PUMP TO ENGINE RATIO

390 ..... 0.90:1

PULLEY OR PULLEY HUB TO WATER PUMP HOUSING FACE DIMENSION

390—7.569 inches from front face of pulley hub.

IMPELLER TO HOUSING CLEARANCE

390 ..... 0.070-0.080 inch

DRIVE BELT TENSION

Between Alternator and Water Pump Pulley (Single Belt)

390 ..... New 110-140
*Used 80-110

Between Alternator and Water Pump Pulley (Dual Belts)†

390 ..... New—Front 110-140
Rear 105-155
*Used—Front 80-110
Rear 75-120

WATER PUMP, DRIVE BELTS, AND THERMOSTATS (Continued)

DRIVE BELT TENSION (Continued)

Between Water Pump and Air Conditioner Pulley

390 ..... New 120-150
*Used 90-120

Between Crankshaft and Power Steering Pulley

390 ..... New 120-150
*Used 90-120

*Belt operated for a minimum of 10 minutes is considered a used belt.

†Dual Belts Used When Equipped With Air Conditioner.

THERMOSTAT (390 ENGINE)

Low Temperature

Open °F ..... 155°-162°
Fully Open ..... 182°

High Temperature

Open °F ..... 185°-192°
Fully Open ..... 212°

COOLING SYSTEM CAPACITY

STANDARD	Quarts
390	19*

*Add 1 quart extra for heater.

CRUISE-O-MATIC TRANSMISSION

CONTROL PRESSURE RANGES

Manifold Vacuum HG (inches)	Engine Speed RPM	Selector Position	Gauge Reading PSI
18 Minimum	450-475	N-D1-D2	57-72
		P-R-L	57-213
16 to 13.7	As Required	D1-D2	Pressure Starts Rising
1.5 or less	Stall	D1-D2	145-170
		R-L	201-213

TORQUE SPECIFICATIONS

Name	Foot Pounds
Converter to Flywheel Nuts	15-28
Converter Housing to Transmission Case Bolts	35-45
Front Pump to Transmission Case Bolts	17-22
Front Servo to Transmission Case Bolts	30-35
Rear Servo to Transmission Case Bolts	40-50
Planetary Support to Transmission Case Screws	20-25
Upper Valve Body to Lower Valve Body Bolts	4-6
Control Valve Body to Transmission Case Bolts	8-10
Pressure Regulator Assembly to Transmission Case Screws	17-22
Extension Assembly to Transmission Case Bolts	28-38
Oil Pan to Transmission Case Bolts	10-13

TORQUE SPECIFICATIONS (Continued)

Name	Foot Pounds
Case Assembly—Gauge Hole Plugs	7-15
Rear Band Adjusting Screw Locknut	35-40
Front Band Adjusting Screw Locknut	20-25
Manual Control Lever Nut	35-40
Downshift Lever Nut	17-20
Front Pump Cover Screws	25-35*
Rear Pump Cover Screws (¼-20)	80-90*
Rear Pump Cover Screws (10-24)	25-35*
Governor Inspection Cover Screws	50-60*
Converter Cover Drain Plug	15-28
Converter Housing to Engine Bolts	45-50
Transmission Vent Assembly	7-10
Governor Valve Body to Counterweight Screws	50-60*
Governor Valve Body Cover Screws	20-30*
Pressure Regulator Cover Screws	20-30*
Control Valve Body Screws	20-30*
Case Assembly—Oil Cover Inlet & Outlet Plugs	10-15
Front Servo Release Piston to Servo Piston Screws	20-30*
Lower Valve Body Cover Side Plate to Lower Body Cover Screws	20-30*
Vacuum Diaphragm Unit to Case	18-27†
Inhibitor Plug to Case	10-15

*Inch-Pounds †Using Tool FCO-24

CRUISE-O-MATIC TRANSMISSION (Continued)

TRANSMISSION GEAR RATIOS

Gear	Selector Lever Position	Clutch Applied	Band Applied	Gear Ratio
Neutral	N	None	None	—
First	D1	Front	Rear*	2.40:1
Second	D1 or D2	Front	Front	1.47:1
Third	D1 or D2	Front and Rear	None	1.00:1
Reverse	R	Rear	Rear	2.00:1

*In first gear D1, the planet carrier is held against rotation by the one-way clutch.

STALL SPEEDS

Selector Lever Position	Clutch Applied	Band Applied	Engine RPM
D2	Front	Front	1800-2000
D1	Front	One-Way Clutch	
L	Front	Rear	
R	Rear	Rear	

LUBRICANT REFILL CAPACITY

Type of Lubricant	Approximate Capacity
Ford Automatic Transmission Fluid C1AZ-19582-A	11½ Quarts (System Dry) 10 Quarts (Drain and Refill)

CHECKS AND ADJUSTMENTS

Operation	Specification
Transmission End Play Check	0.010-0.029 inch Selective Thrust Washers Available: 0.063-0.061 inch, 0.069-0.067 inch 0.076-0.074 inch, 0.083-0.081 inch
Turbine and Stator End Play Check	0.060 inch (maximum)
Front Band Adjustment (Use ¼-inch spacer between adjustment screw and servo piston stem)	Adjust screw to 10 in-lbs torque, and back off one full turn; lock nut to 20-25 ft-lbs
Rear Band Adjustment	Adjust screw to 10 ft-lbs torque, and back off 1½ turns; lock nut to 35-40 ft-lbs
Primary Sun Gear Shaft Ring End Gap Check	0.002-0.009 inch
Accelerator Pedal Height Adjustment	3 11/16 inches above floor mat
Rear Clutch Steel Plate Coning Clearance Check	0.010 inch (maximum)
Output Shaft to Fluid Distributor Seal Ring End Gap	0.001 to 0.006 inch

REAR AXLE AND DRIVE LINE

LUBRICANT REFILL CAPACITY

Capacity
5 pints

ADJUSTMENTS

	Inches
Backlash Between Drive Gear and Pinion	0.004-0.009
Maximum Backlash Variation Between Teeth	0.003
Maximum Runout of Backface of Drive Gear as Assembled	0.003
Thickness Differential Side Gear Thrust Washers Differential Pinion Gear Thrust Washers	 0.030-0.032 0.030-0.032
Nominal Pinion Locating Shim	0.020
Available Shims (In steps of 0.001 inch)	0.010-0.029

TORQUE LIMITS (Ft-lbs)

Differential Bearing Cap Screws	70-80
Differential Bearing Adjusting Nut Lock Bolts	15-20

TORQUE LIMITS (Ft-lbs) (Continued)

Carrier to Housing Stud Nuts		30-40
Pinion Retainer to Carrier Cap Screws		30-40
Drive Gear Attaching Cap Screws		65-75
Rear Axle Shaft Bearing Retainer Nuts		30-35
Case to Drive Gear Bolts		65-75
Minimum Torque Required to Tighten Pinion Nut to Obtain Correct Pinion Bearing Preload		175*
Pinion Bearing Preload	New Bearings	17-27 inch-pounds
	Used Bearings	8-12 inch-pounds
Differential Bearing Preload		2½-3 notches tight

*If this torque can not be obtained with a used spacer, install a new spacer.

PINION AND DRIVE GEAR IDENTIFICATION

Ratio	Number of Teeth	
	Drive Gear	Pinion
3.00-1	30	10

REAR AXLE AND DRIVE LINE (Continued)

DRIVE PINION ADJUSTING SHIM THICKNESS CHANGES (Inches)

New Pinion Marking	Old Pinion Marking								
	−4	−3	−2	−1	0	+1	+2	+3	+4
+4	+0.008	+0.007	+0.006	+0.005	+0.004	+0.003	+0.002	+0.001	0
+3	+0.007	+0.006	+0.005	+0.004	+0.003	+0.002	+0.001	0	−0.001
+2	+0.006	+0.005	+0.004	+0.003	+0.002	+0.001	0	−0.001	−0.002
+1	+0.005	+0.004	+0.003	+0.002	+0.001	0	−0.001	−0.002	−0.003
0	+0.004	+0.003	+0.002	+0.001	0	−0.001	−0.002	−0.003	−0.004
−1	+0.003	+0.002	+0.001	0	−0.001	−0.002	−0.003	−0.004	−0.005
−2	+0.002	+0.001	0	−0.001	−0.002	−0.003	−0.004	−0.005	−0.006
−3	+0.001	0	−0.001	−0.002	−0.003	−0.004	−0.005	−0.006	−0.007
−4	0	−0.001	−0.002	−0.003	−0.004	−0.005	−0.006	−0.007	−0.008

STEERING

TORQUE LIMITS

STEERING LINKAGE	Ft -lbs.
Sector Shaft (Pitman) Arm Nut	110-150
Steering Arm to Idler Arm Rod Stud Nuts	40-55
Spindle Connecting Rod End Stud Nuts	40-55
Connecting Rod Sleeve Clamp Bolts	16-27
Idler Arm Bracket to Underbody Bolts	20-30
Idler Arm and Bushing to Bracket Nut	70-90
PUMP, STEERING GEAR, AND STEERING SHAFT	
Steering Gear to Underbody Bolts	35-50
Sector Shaft Cover Bolts	23-27
Steering Wheel Nut	25-35
Flange to Insulator Bolts (Fixed Column)	10-15
Pump Drive Pulley to Crankshaft Pulley Bolts	20-25
Pump Bracket to Water Pump Housing Bolt	20-25
Pump Bracket Pivot Bolt	20-25
Pump Housing Bolts	20-25
STEERING COLUMN ASSEMBLY	
Steering Column Opening Cover Plate Screws	9-12
Track to Pedal Support Bolts	19-23
Locking Lever Pivot Bolt	5-22
Column to Track Adjustable Bracket	12-18
Stop Bracket to Track	10-14
Column Stop Bolt	10-14

TORQUE LIMITS (Continued)

Strut—Lower Track Support to Body Mounting Bracket	18-22
Strut—Lower Track Support to Track Assembly	18-22
Pivot Bracket Clamp Bolts	22-28
Pivot Bracket Stud Nut	10-14
Pawl Pivot Nut	5-22
Lock Plate Eccentric Bolt (Nut)	18-22
Lock Plate Bolt	10-14
Stop Bracket Nut	9-12
Detent Spring Bolt	5-7
Shift Lever to Shift Connecting Rod Ball Stud Nut	9-12
Friction Adjustment Bolt (Nuts)	9-12

ADJUSTMENTS AND TOLERANCES

Piston Rack to Sector Shaft Backlash	0.004 inch
Worm Bearing Preload	2-6 in-lbs*
Mesh Load	9-16 in-lbs max.
Steering Effort (Spring Scale)	5-6 lbs
Pump Belt Tension New Belt Used Belt	 120-150 lbs 90-120 lbs
Fluid Pressure	950-1100 psi

*2 to 4 in-lbs. preload before installing input shaft seal, or sector shaft in the gear assembly.

BRAKES AND SUSPENSION

BRAKE CHECKS AND ADJUSTMENTS

Type of Check or Adjustment	Specification	
Brake Shoe Repair	**Drum Diameter** 11.030-11.060 inch	**Brake Lining Required** Oversize
	Brake Lining Clearance (Midway between Rivets) Maximum 0.005 inch	
	Lining Wear Limit (From Top of Rivets) Maximum 1/32 inch	
Master Cylinder	Hydraulic Master Cylinder Bore, Honed Diameter. Maximum 0.878 inch	
Power Unit	Push Rod Adjustment 0.995-1.005 inch	
Drum Out-of-Round	Refinish if Total Indicator Runout Exceeds 0.007 inch	

DIMENSIONS

Axle	Drum Inside Diameter (Inches)	Drum Maximum Boring Limit (Inches)	Lining Length (Inches)		Lining Width (Inches)		Wheel Cylinder Bore Diameter (Inches)	Master Cylinder Bore Diameter (Inches)
			Primary	Secondary	Primary	Secondary		
Front	11.030	11.060	9.039	12.21	3.00	3.00	1 3/32	7/8
Rear	11.030	11.060	9.039	12.21	3.00	3.00	15/16	7/8

TORQUE LIMITS

Description	Ft-Lbs
Front Anchor Pin Bolt	80-100
Spindle to Brake Carrier Plate Upper Bolts	25-35
Spindle to Brake Carrier Plate Lower Bolts	75-80
Master Cylinder Mounting Bolts	12-18
Mounting Bracket to Mounting Hub Nuts	85-115 Inch-Pounds
Master Cylinder to Booster	12-18
Booster to Dash Panel Mounting Nuts	12-18

FRONT WHEEL ALIGNMENT

CASTER

Caster Angle	−¾° to −2¼°
Maximum Caster Angle Difference Between Wheels	½°

CAMBER

Camber Angle	+¾° to 0°
Maximum Camber Angle Difference Between Wheels	½° (¼° preferred)
Maximum Allowable Thickness of Shim Stack at Each Bolt	11/16 inch
Amount of Camber Angle Change With 1/16 inch Change of Shim Thickness at Both Bolts	⅓°

FRONT AND REAR SUSPENSION

TORQUE LIMITS—FRONT SUSPENSION

Description	Ft-Lbs
Lower Arm Ball Joint Assembly to Spindle Nut	60-80
Upper Arm Joint Assembly to Spindle Nut	60-80
Upper Arm Shaft to Bushing	15-25
Stabilizer Link Nuts	10-15
Shock Absorber to Mounting Bracket	15-25
Stabilizer Brackets to Frame	11-18
Strut to Lower Arm Nuts	85-115
Lower Ball Joint to Lower Arm	60-80
Upper Ball Joint to Upper Arm	60-80
Spindle Connecting Rod to Spindle Arm	40-55
Upper Arm Inner Shaft to Body	50-70
Strut to Underbody Bracket	70-90
Pivot Bracket to Underbody	85-115
Lower Arm Shim Retaining Bolt	10-15
Lower Arm Pivot Bolt	60-80
Lower Arm Ball Joint Preload	5-20 in-lbs at 1 rpm
Upper Arm Inner Shaft Bushings	100

FRONT COIL SPRING FREE HEIGHT

Yellow Marking	17½ inches

BRAKES AND SUSPENSION (Continued)

FRONT AND REAR SUSPENSION (Continued)

TREAD WIDTH AND WHEELBASE

Front Tread Width	61 inches
Rear Tread Width	60 inches
Wheelbase	113 inches

TOE-IN AND TOE-OUT

Toe-In	⅛ to ¼ inch
Toe-Out on Turn (Angle of Inside Wheel When Outside Wheel is Turned 20°)	20½°

REAR LEAF SPRING

Body Style	Number of Leaves	Capacity at Normal Load Height	Spring Length at Normal Load
Hardtop	4	880-920 pounds	60 inches
Convertible	4	980-1020 pounds	60 inches

TORQUE LIMITS—REAR SUSPENSION

Description	Ft-Lbs
Rear Shock Absorber Stud Nut (Upper or Lower)	15-25
Rear Axle Bumper Bracket	20-30
Rear Spring Center Bolt	5-15
Rear Spring Front and Rear Shackle Nuts	22-28
Rear Spring Shackle Bar to Underbody Nut	22-28
Rear Spring Front Shackle Bracket Retaining Bolts	30-45
Rear Spring Shackle to Rear Spring Nut	22-28
Rear Spring U-Bolt Nut	60-70
Rear Spring Hanger to Frame	50-60

WHEELS AND TIRES

Tire Size and Ply Rating		8:00 x 14-4
Inflation Pressure (psi)	Front	24
	Rear	24
Wheel Nut Torque Limits (Ft-Lbs.)		85-95

GENERATING AND STARTING SYSTEMS

ALTERNATOR

Watts	Field Current Draw @ 12 Volts (Amperes)	Alternator rpm Charge Starts*	Maximum Charging Rate		Belt Width Inches	Brushes		
			Amperes	Alternator Speed (rpm)*		No.	Original Length (Inches)	Spring Tension (Ounces)
450	2.3-2.5	950	30	6500 (Hot)	⅜	2	0.63	7-12

*To find the equivalent engine rpm. divide the alternator pulley diameter by the crankshaft pulley diameter, and multiply by the alternator rpm.

REGULATOR

Current Rating (Amperes)	30
Field Relay Closing Volts	4-5
Voltage Regulation @ 75°F.	14.1-14.7

ALLOWABLE BATTERY FAST CHARGE TIME (Domestic Only)

Specific Gravity	Maximum Fast Charge Time
Below 1.150	1 hour
1.150 to 1.175	¾ hour
1.175 to 1.200	½ hour
1.200 to 1.225	¼ hour
Above 1.225	Slow Charge Only

VOLTAGE REGULATION SETTING VERSUS AMBIENT AIR TEMPERATURE

Ambient Temperature °F.	Voltage Regulation Setting (Volts)
25	14.4-15.0
50	14.3-14.9
75	14.1-14.7
100	13.9-14.5
125	13.8-14.4
150	13.6-14.2
175	13.5-14.1

STARTER MOTOR

Current Draw Under Load (Amperes)	Normal Engine Cranking Speed (rpm)	Minimum Stall Torque @ 5 Volts (Foot-Pounds)	Maximum Load (Amperes)	No Load Amperage	Maximum Commutator Runout (Inches)
155-210	150-180	14.8	580	80	0.002

GENERATING AND STARTING SYSTEM (Continued)

BATTERY FREEZING TEMPERATURES

Specific Gravity	Freezing Temp
1.280	− 90°F.
1.250	− 62°F
1.200	− 16°F
1.150	+ 5°F
1.100	+ 19°F.

STARTER BRUSHES

Minimum Mfg. Length (Inches)	Wear Limit (Inches)	Brush Spring Tension (Ounces)	No. Used
0.43-0.46	0.25	48.58	4

BATTERY (12 VOLTS)

Original Equipment			
Filler Cap Color	Plates	Amp. Hours	Ground
Gray	78	65	Negative
Yellow	66	70	

LIGHTS, INSTRUMENTS AND ACCESSORIES

FUSE AND CIRCUIT BREAKER CHART

Circuit	Protective Device	Location
Clock	1AG-2 or AGA-2	Fuse Panel on Right Hand Cowl
Cigar Lighter (Socket)	Circuit Breaker	Back of Lighter Socket
Cigar Lighter Circuit	3AG-15 or AGC-15	Fuse Panel on Right Hand Cowl
Back-Up Lamps and Windshield Washer Pump	SFE-7.5	Fuse Panel on Right Hand Cowl
Head Lamps	Circuit Breaker	Integral with Headlight Switch
Auxiliary Lamps (Park, Tail, Dash, Stop, and Interior)	Circuit Breaker	Fuse Panel on Right Hand Cowl
Turn Signals	SFE-7.5	Fuse Panel on Right Hand Cowl
Radio	SFE-7.5	Fuse Panel on Right Hand Cowl
Heater Blower	Circuit Breaker 20 Amp.	Fuse Panel on Right Hand Cowl
Power Seats	Circuit Breaker 30 Amp.	Fuse Panel on Right Hand Cowl
Power Windows Control Circuit	Circuit Breaker 20 Amp.	Fuse Panel on Right Hand Cowl
Power Windows Power Circuit	Circuit Breaker 30 Amp.	Fuse Panel on Right Hand Cowl
Air Conditioning	Circuit Breaker 20 Amp.	Fuse Panel on Right Hand Cowl
Convertible Top Control		
Power Circuit	Circuit Breaker 50 Amp.	On Right Hand Apron and Radiator Support
Control Circuit	Circuit Breaker 10 Amp.	Fuse Panel on Right Hand Cowl
Ground Circuits		
Luggage Compartment Lock Motor	Circuit Breaker 15 Amp.	Luggage Compartment Door Panel
Upper Back Panel Motor	Circuit Breaker 15 Amp.	Luggage Compartment Door Panel
Instrument Panel Rheostat	SFE-4	Fuse Panel on Right Hand Cowl

BULB CHART

Unit	Candle Power or Wattage	Trade No.
Headlamp—No. 1 (Inner)	37.5w	4001
Headlamp—No. 2 (Outer)	50/37.5w	4002
Front Turn Signal/Parking	32/4 c.p.	1157
Rear Turn Signal & Stop/Tail	32/4 c.p.	1157
Stop/Tail Only	32/4 c.p.	1157
License Plate	4 c.p.	1155
Back-up Lamps	21 c.p.	1141
Spot Lamp	30w	4405
Luggage Compartment	6 c.p.	631
Dome Lamp	15 c.p.	1003
Instrument Panel Indicators:		
Hi Beam	2 c.p.	1895
Oil Pressure	2 c.p.	1895
Generator	2 c.p.	1895

BULB CHART (Continued)

Unit	Candle Power or Wattage	Trade No.
Turn Signal	2 c.p.	1895
Parking Brake Warning	2 c.p.	257
Illumination:		
Speedometer	3 c.p.	1816
Cluster	2 c.p.	1895
Ash Receptacle/Glove Compartment	1.5 c.p.	1445
Cigarette Lighter Socket & W/S Wiper	2 c.p.	1895
Heater Control	2 c.p.	1895
Heater & A/C Control	2 c.p.	1895
Clock	3 c.p.	1816
Ignition Key & Lighting Switch	1.5 c.p.	1445
Radio Dial	1.9 c.p.	1893
Courtesy and/or Map (Door Mounted)	15 c.p.	1004
Automatic Transmission Control	1.5 c.p.	1445

INSTRUMENT VOLTAGE

Fuel and Temperature Gauges—Average Voltage at Gauge Terminals	5 v

AIR CONDITIONER CURRENT DRAW

At Slow Speed	6-7 Amperes at 12 volts
At Fast Speed	13-14 Amperes at 12 volts

LIGHTS, INSTRUMENTS AND ACCESSORIES (Continued)

FUEL LEVEL VS GAUGE READING

Gauge Reading	Approx. Gallons in Tank
E	1-3
¼	4-7
½	8-12
¾	12-16
F	17-20

SPEEDOMETER GEAR—REAR AXLE—TIRE SIZE COMBINATIONS

Tire Size	8.00 x 14-4	
Rear Axle Ratio	Teeth in Drive Gear	Teeth in Driven Gear
3.00:1	8	18

HORN

Horn Current Draw at 12 v	9.0-10.0 Amperes

STOP LIGHT SWITCH

Operating Pressure	60-110 psi

TURN INDICATOR

Current Draw at 12 v	0-4 Amperes

HEATER MOTOR CURRENT DRAW

At Low Speed	2-3 Amperes at 12 volts
At Medium Speed	3-5 Amperes at 12 volts
At Fast Speed	6-8 Amperes at 12 volts

BODY

GENERAL DIMENSIONS

Wheelbase	113 inches
Tread—Front	61 inches
Rear	60 inches
Over-all Length	205 inches
Over-all Width	76.2 inches
Over-all Height (with Design Load)—Hardtop Convertible	52.5 inches 53.3 inches

CIRCUIT BREAKER CHART

Circuit	Protective Device	Location
Convertible Top Control		
Relay Feed	50-amp. Circuit Breaker	On Starter Relay
Switch Feed	10-amp. Circuit Breaker	
Package Tray Motor	15-amp. Circuit Breaker	On Deck Lid
Deck Lock Motor	15-amp. Circuit Breaker	On Deck Lid
Power Seat	30-amp. Circuit Breaker	Fuse Panel R.H. Cowl
Power Window Main	30-amp. Circuit Breaker	Fuse Panel R.H. Cowl
Door Window	Not Serviced	Integral with Motors
Quarter Window	Not Serviced	Integral with Motors

TOP MAXIMUM AMPERAGE DRAW

Operation	Amperes*
Top Retract Cycle	
Deck Lid Unlock	20
Deck Lid Open	63
Package Tray Extend	30
Top Retract	65
Deck Lid Close	60
Deck Lid Lock	22
Top Erect Cycle	
Deck Lid Unlock	20
Deck Lid Open	63
Top Erect	65
Package Tray Fold	20

TOP MAXIMUM AMPERAGE DRAW (Cont'd)

Operation	Amperes*
Deck Lid Close	60
Deck Lid Lock	22

*While making amperage draw tests, a battery reading of 11.5-12.5 volts must be maintained. Momentary peak currents above specifications are not significant.

ELECTRICAL COMPONENT CURRENT DRAW

Component	Amperes†
Pump Motor—Normal —By-passing	54-60 42-50
Tray Motor —Normal —No Load —Stalled	10-32 14-18 45-58
Lock Motor —Normal —No Load —Stalled	16-20 12-15 32-40
Solenoids —Each	10

†100-amp. scale ammeter connected between 50-amp. circuit breaker and relay feed wire.

POWER SEAT CURRENT DRAW

At No Load	9-11 Amperes at 12 volts
Seat Operating (Normal Load)	12-22 Amperes
Stalled	30-50 Amperes

DOOR WINDOW CURRENT DRAW

At No Load	5-8 Amperes at 12 volts
Operating Window	8-16 Amperes (Max.) at 12 volts
Stalled	23-28 Amperes at 12 volts

QUARTER WINDOW CURRENT DRAW

At No Load	6-9 Amperes at 12 volts
Operating Window	9-19 Amperes at 12 volts
Stalled	25-30 Amperes at 12 volts

1963 THUNDERBIRD

GROUP	PART	SECTION	PLATE
I	5	A	1

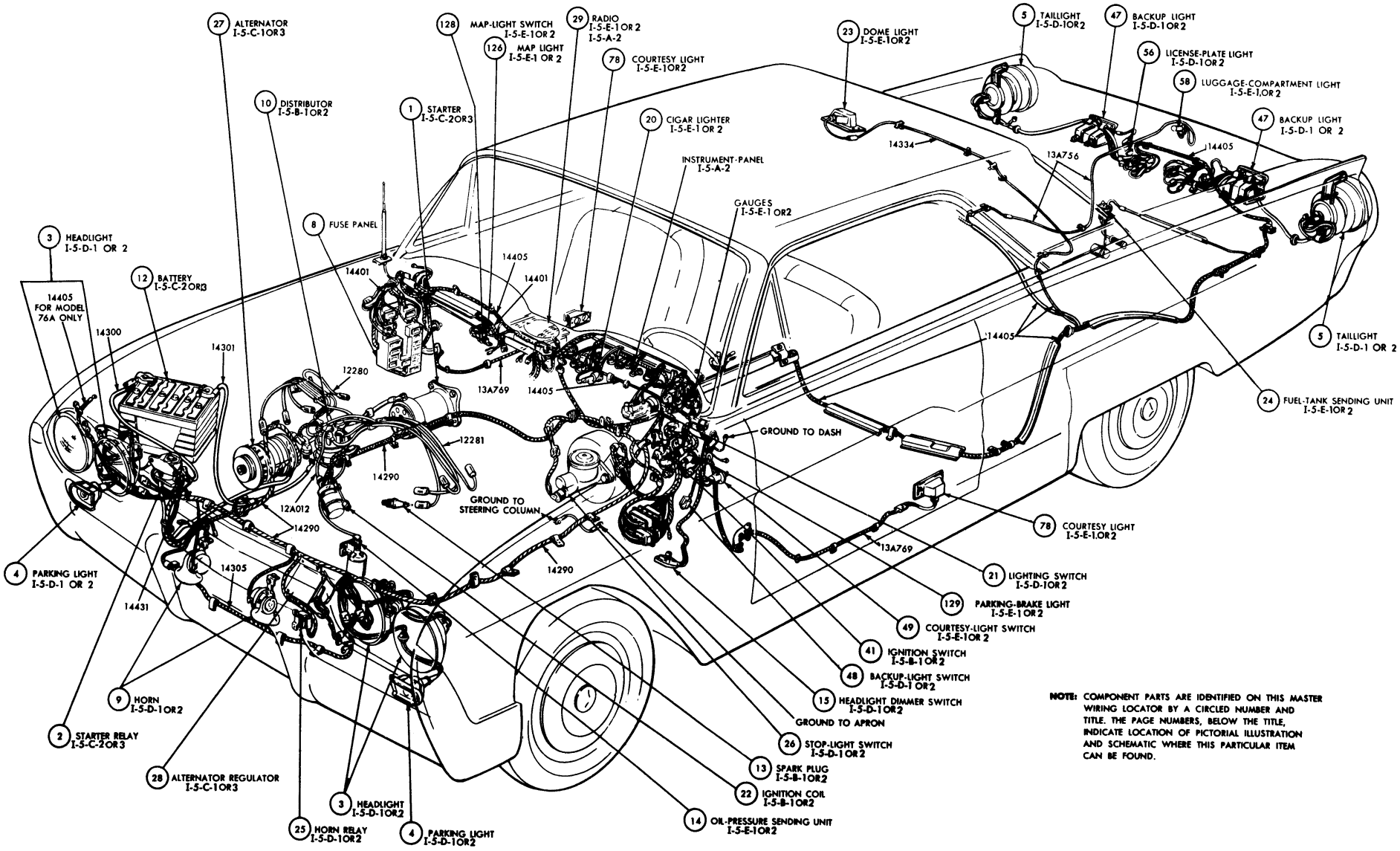

NOTE: COMPONENT PARTS ARE IDENTIFIED ON THIS MASTER WIRING LOCATOR BY A CIRCLED NUMBER AND TITLE. THE PAGE NUMBERS, BELOW THE TITLE, INDICATE LOCATION OF PICTORIAL ILLUSTRATION AND SCHEMATIC WHERE THIS PARTICULAR ITEM CAN BE FOUND.

MASTER WIRING LOCATOR

GROUP	PART	SECTION	PLATE
I	5	A	2

1963 THUNDERBIRD

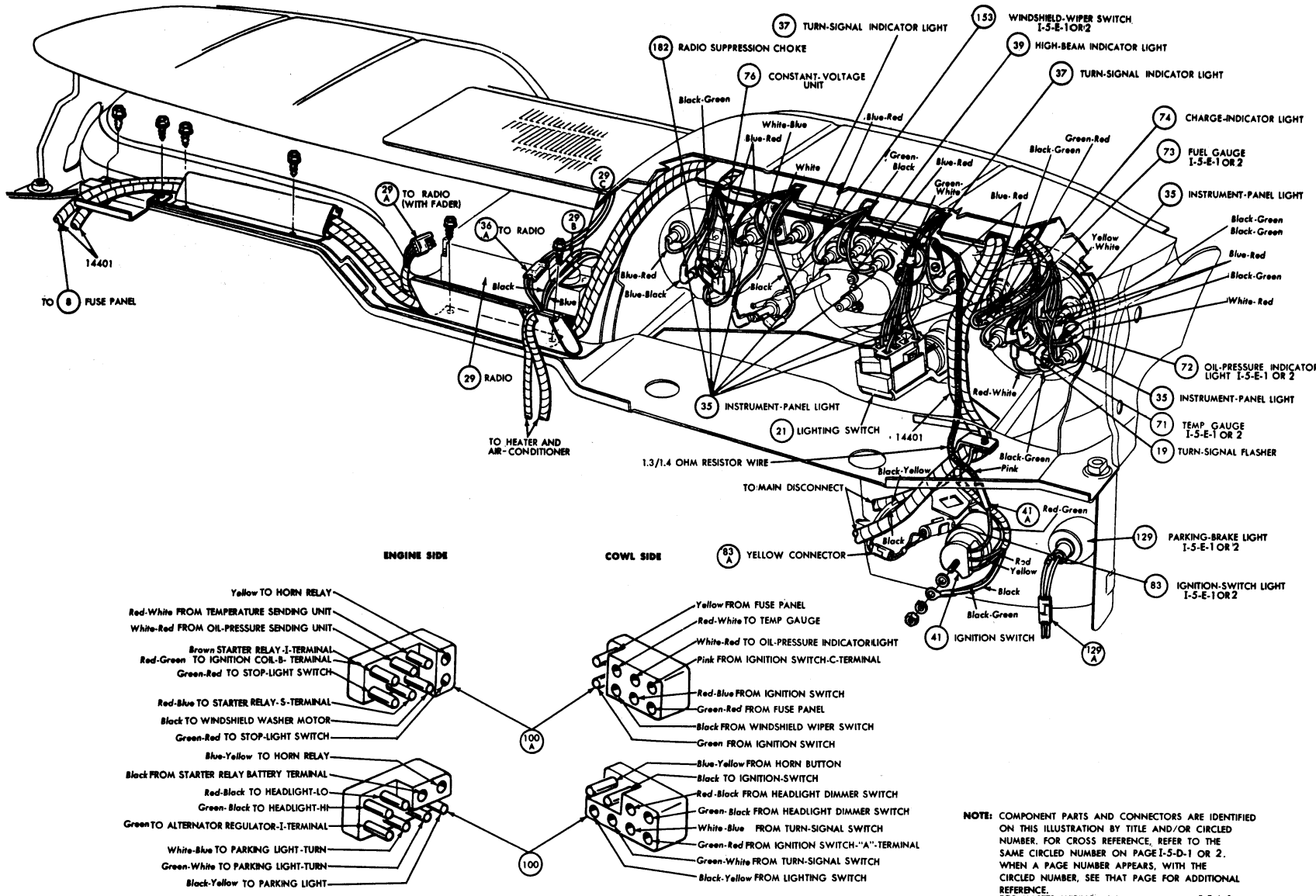

NOTE: COMPONENT PARTS AND CONNECTORS ARE IDENTIFIED ON THIS ILLUSTRATION BY TITLE AND/OR CIRCLED NUMBER. FOR CROSS REFERENCE, REFER TO THE SAME CIRCLED NUMBER ON PAGE I-5-D-1 OR 2. WHEN A PAGE NUMBER APPEARS, WITH THE CIRCLED NUMBER, SEE THAT PAGE FOR ADDITIONAL REFERENCE.
FOR MASTER WIRING LOCATOR, SEE PAGE I-5-A-1

INSTRUMENT PANEL WIRING

GROUP	PART	SECTION	PLATE
I	5	B	1

1963 THUNDERBIRD

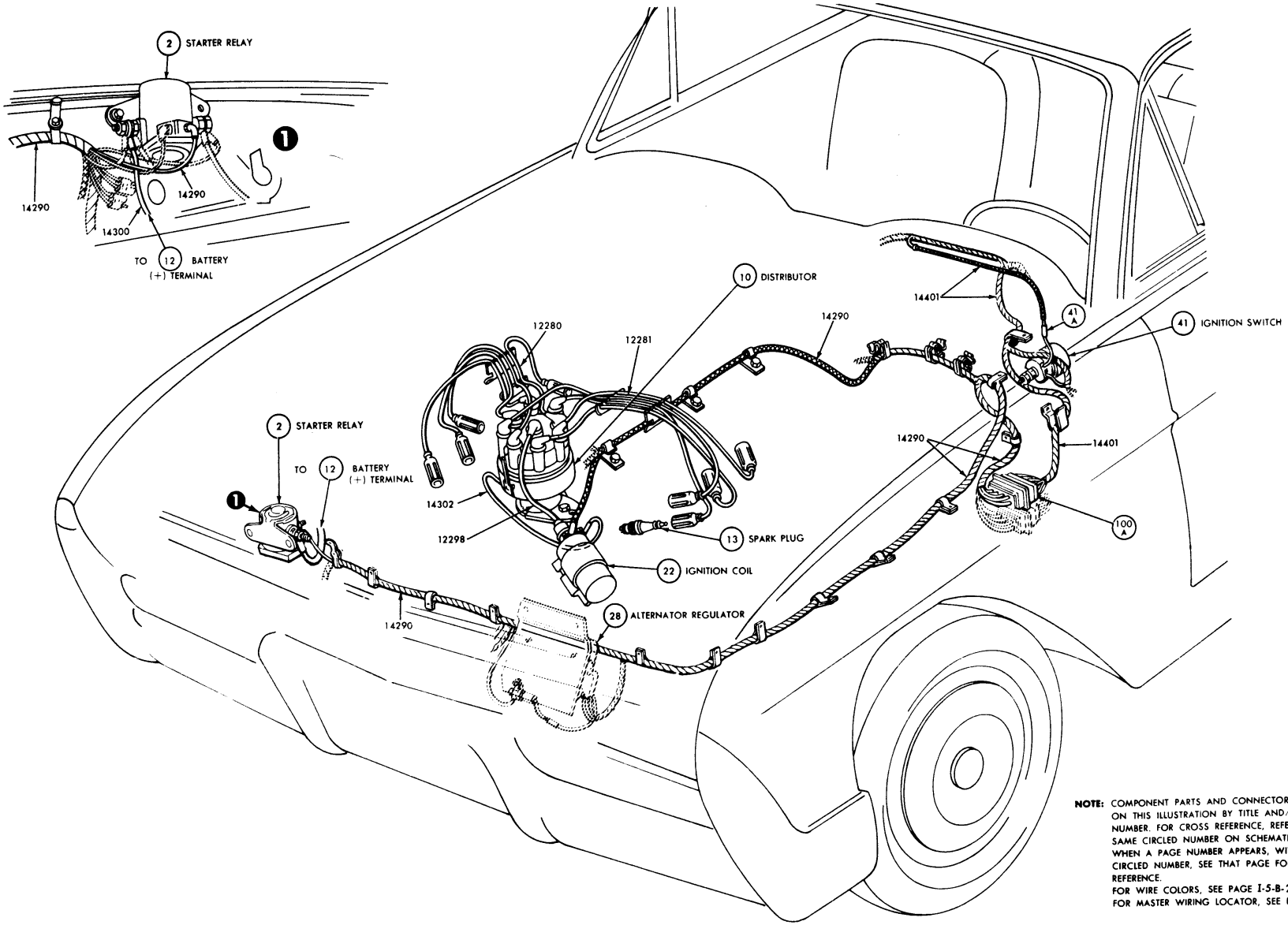

NOTE: COMPONENT PARTS AND CONNECTORS ARE IDENTIFIED ON THIS ILLUSTRATION BY TITLE AND/OR CIRCLED NUMBER. FOR CROSS REFERENCE, REFER TO THE SAME CIRCLED NUMBER ON SCHEMATIC PAGE I-5-B-2. WHEN A PAGE NUMBER APPEARS, WITH THE CIRCLED NUMBER, SEE THAT PAGE FOR ADDITIONAL REFERENCE.
FOR WIRE COLORS, SEE PAGE I-5-B-2.
FOR MASTER WIRING LOCATOR, SEE PAGE I-5-A-1.

IGNITION WIRING

GROUP	PART	SECTION	PLATE
I	5	B	2

1963 THUNDERBIRD

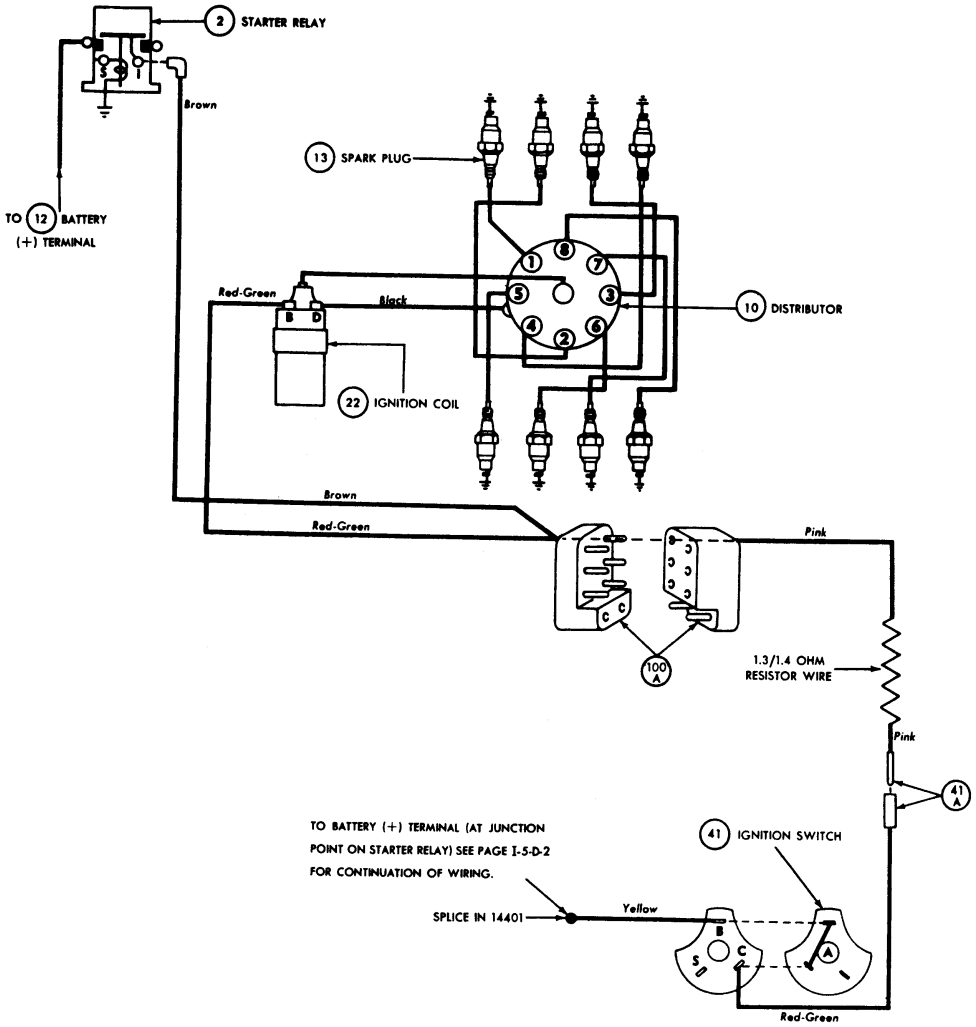

NOTE: COMPONENT PARTS AND CONNECTORS ARE IDENTIFIED ON THIS SCHEMATIC BY TITLE AND/OR CIRCLED NUMBER. FOR CROSS REFERENCE, REFER TO THE SAME CIRCLED NUMBER ON PICTORIAL ILLUSTRATION PAGE I-5-B-1 WHEN A PAGE NUMBER APPEARS, WITH THE CIRCLED NUMBER, SEE THAT PAGE FOR ADDITIONAL REFERENCE. FOR MASTER WIRING LOCATOR, SEE PAGE I-5-A-1.

IGNITION SCHEMATIC

1963 THUNDERBIRD

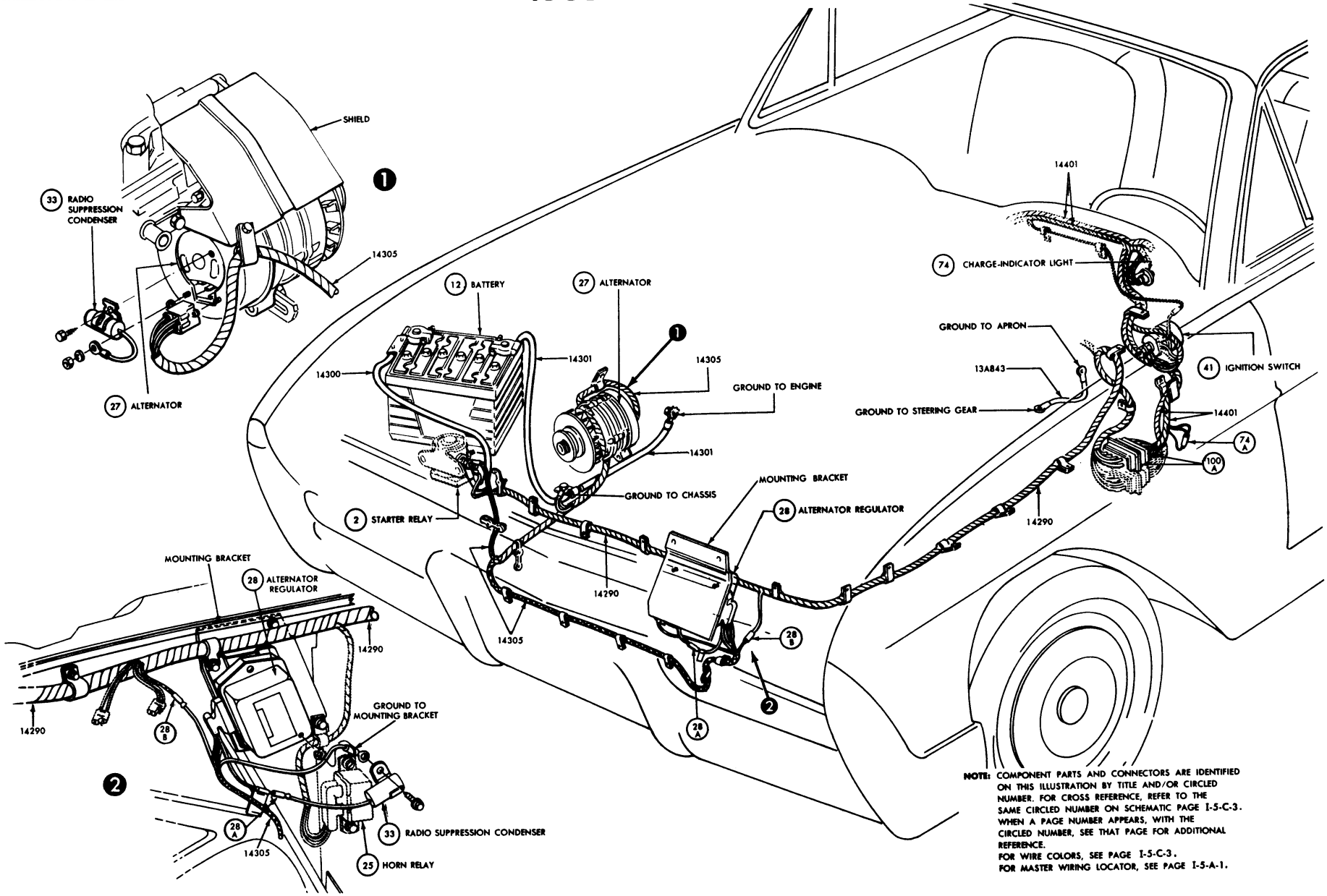

NOTE: COMPONENT PARTS AND CONNECTORS ARE IDENTIFIED ON THIS ILLUSTRATION BY TITLE AND/OR CIRCLED NUMBER. FOR CROSS REFERENCE, REFER TO THE SAME CIRCLED NUMBER ON SCHEMATIC PAGE I-5-C-3. WHEN A PAGE NUMBER APPEARS, WITH THE CIRCLED NUMBER, SEE THAT PAGE FOR ADDITIONAL REFERENCE.
FOR WIRE COLORS, SEE PAGE I-5-C-3.
FOR MASTER WIRING LOCATOR, SEE PAGE I-5-A-1.

ALTERNATOR WIRING

GROUP	PART	SECTION	PLATE
I	5	C	2

1963 THUNDERBIRD

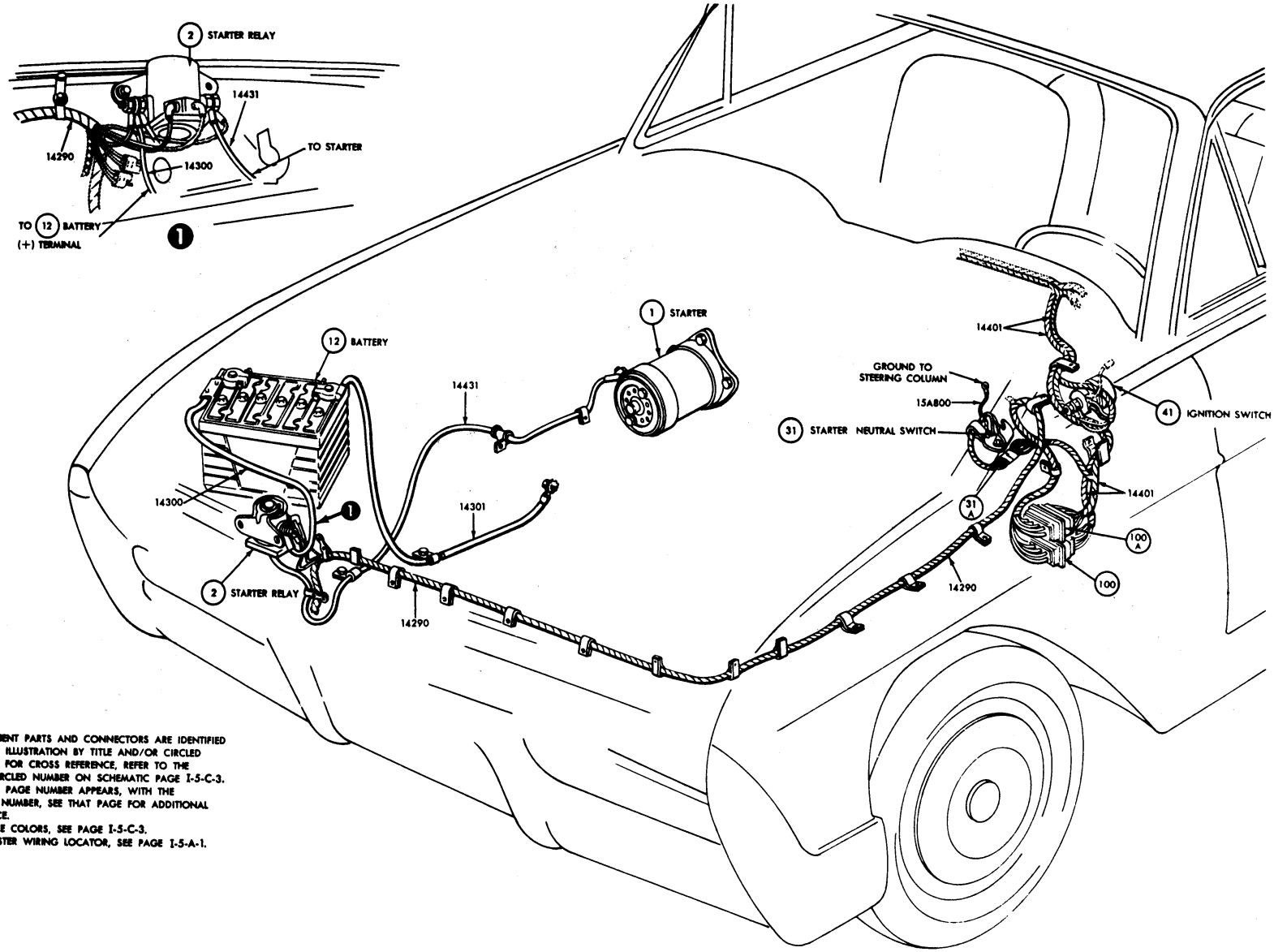

NOTE: COMPONENT PARTS AND CONNECTORS ARE IDENTIFIED ON THIS ILLUSTRATION BY TITLE AND/OR CIRCLED NUMBER. FOR CROSS REFERENCE, REFER TO THE SAME CIRCLED NUMBER ON SCHEMATIC PAGE I-5-C-3. WHEN A PAGE NUMBER APPEARS, WITH THE CIRCLED NUMBER, SEE THAT PAGE FOR ADDITIONAL REFERENCE.
FOR WIRE COLORS, SEE PAGE I-5-C-3.
FOR MASTER WIRING LOCATOR, SEE PAGE I-5-A-1.

STARTER WIRING

GROUP	PART	SECTION	PLATE
I	5	C	3

1963 THUNDERBIRD

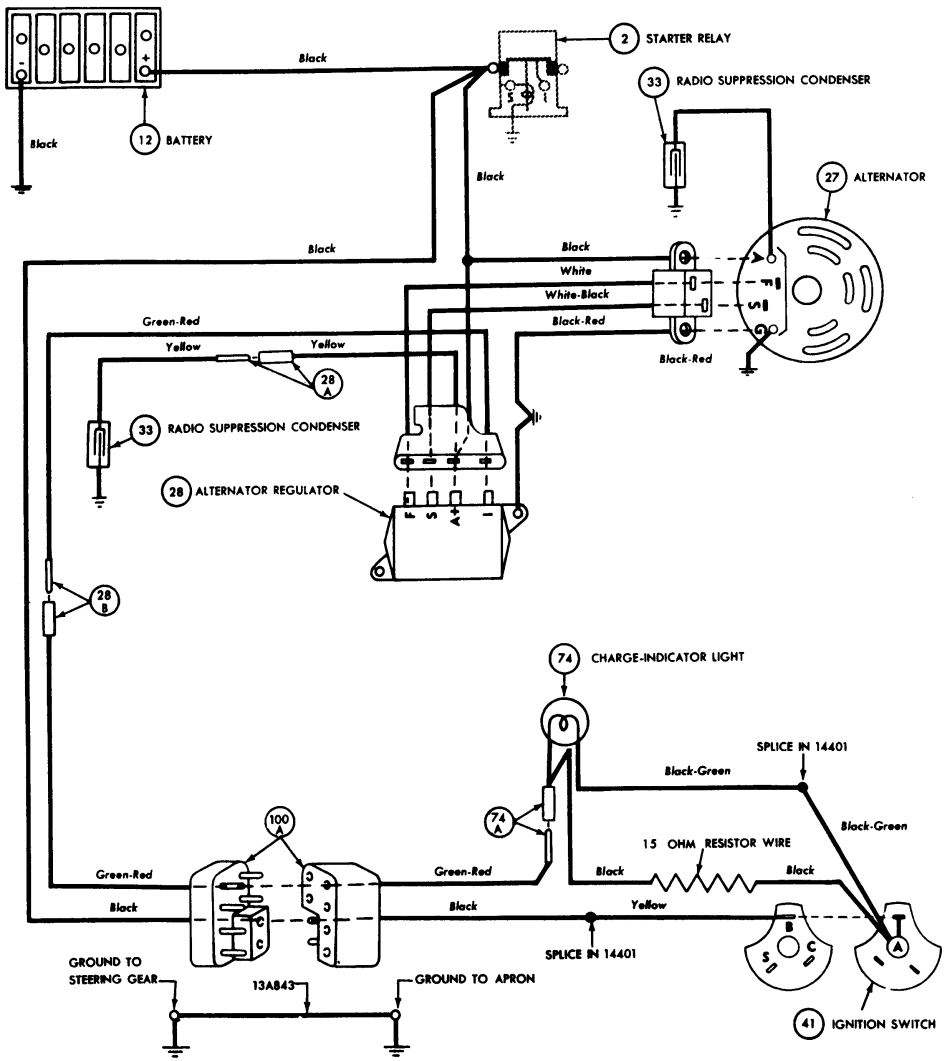

NOTE: COMPONENT PARTS AND CONNECTORS ARE IDENTIFIED ON THIS SCHEMATIC BY TITLE AND/OR CIRCLED NUMBER. FOR CROSS REFERENCE, REFER TO THE SAME CIRCLED NUMBER ON PICTORIAL ILLUSTRATION PAGE I-5-C-1. WHEN A PAGE NUMBER APPEARS, WITH THE CIRCLED NUMBER, SEE THAT PAGE FOR ADDITIONAL REFERENCE. FOR MASTER WIRING LOCATOR, SEE PAGE I-5-A-1.

ALTERNATOR SCHEMATIC

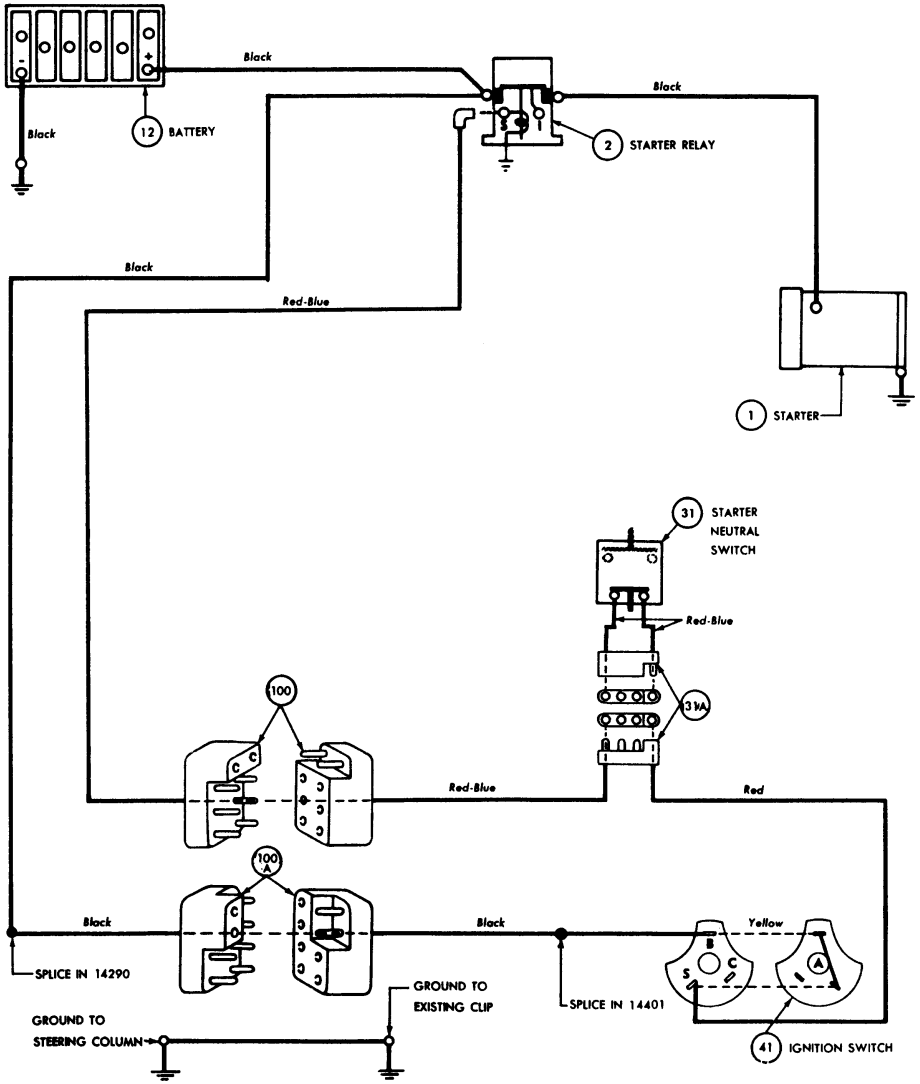

NOTE: COMPONENT PARTS AND CONNECTORS ARE IDENTIFIED ON THIS SCHEMATIC BY TITLE AND OR CIRCLED NUMBER. FOR CROSS REFERENCE, REFER TO THE SAME CIRCLED NUMBER ON PICTORIAL ILLUSTRATION PAGE I-5-C-2. WHEN A PAGE NUMBER APPEARS, WITH THE CIRCLED NUMBER, SEE THAT PAGE FOR ADDITIONAL REFERENCE. FOR MASTER WIRING LOCATOR, SEE PAGE I-5-A-1.

STARTER SCHEMATIC

GROUP	PART	SECTION	PLATE
I	5	D	1

1963 THUNDERBIRD

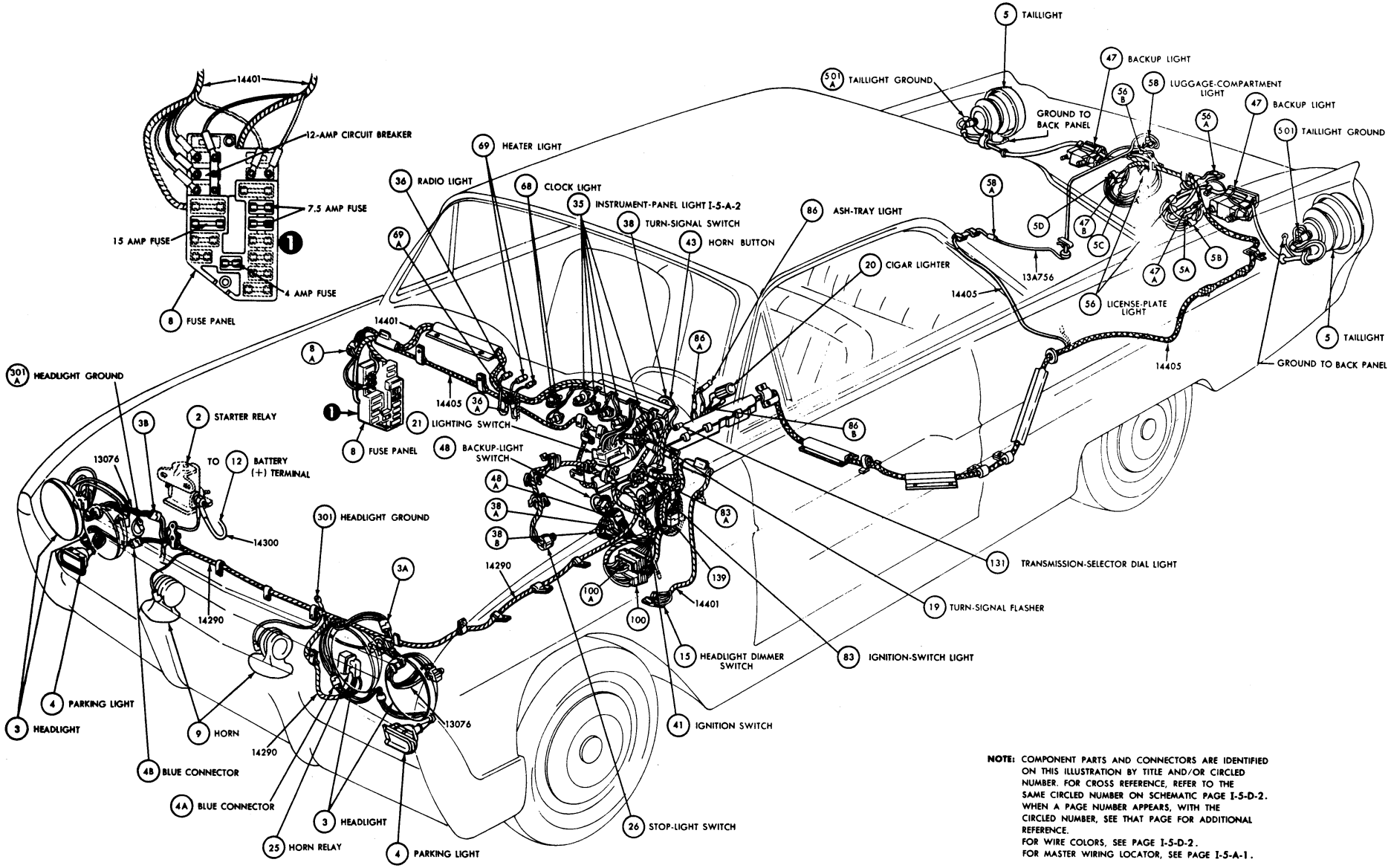

NOTE: COMPONENT PARTS AND CONNECTORS ARE IDENTIFIED ON THIS ILLUSTRATION BY TITLE AND/OR CIRCLED NUMBER. FOR CROSS REFERENCE, REFER TO THE SAME CIRCLED NUMBER ON SCHEMATIC PAGE I-5-D-2. WHEN A PAGE NUMBER APPEARS, WITH THE CIRCLED NUMBER, SEE THAT PAGE FOR ADDITIONAL REFERENCE.
FOR WIRE COLORS, SEE PAGE I-5-D-2.
FOR MASTER WIRING LOCATOR, SEE PAGE I-5-A-1.

EXTERIOR LIGHTING, HORN, TURN SIGNALS, AND CIGAR LIGHTER WIRING

1963 THUNDERBIRD

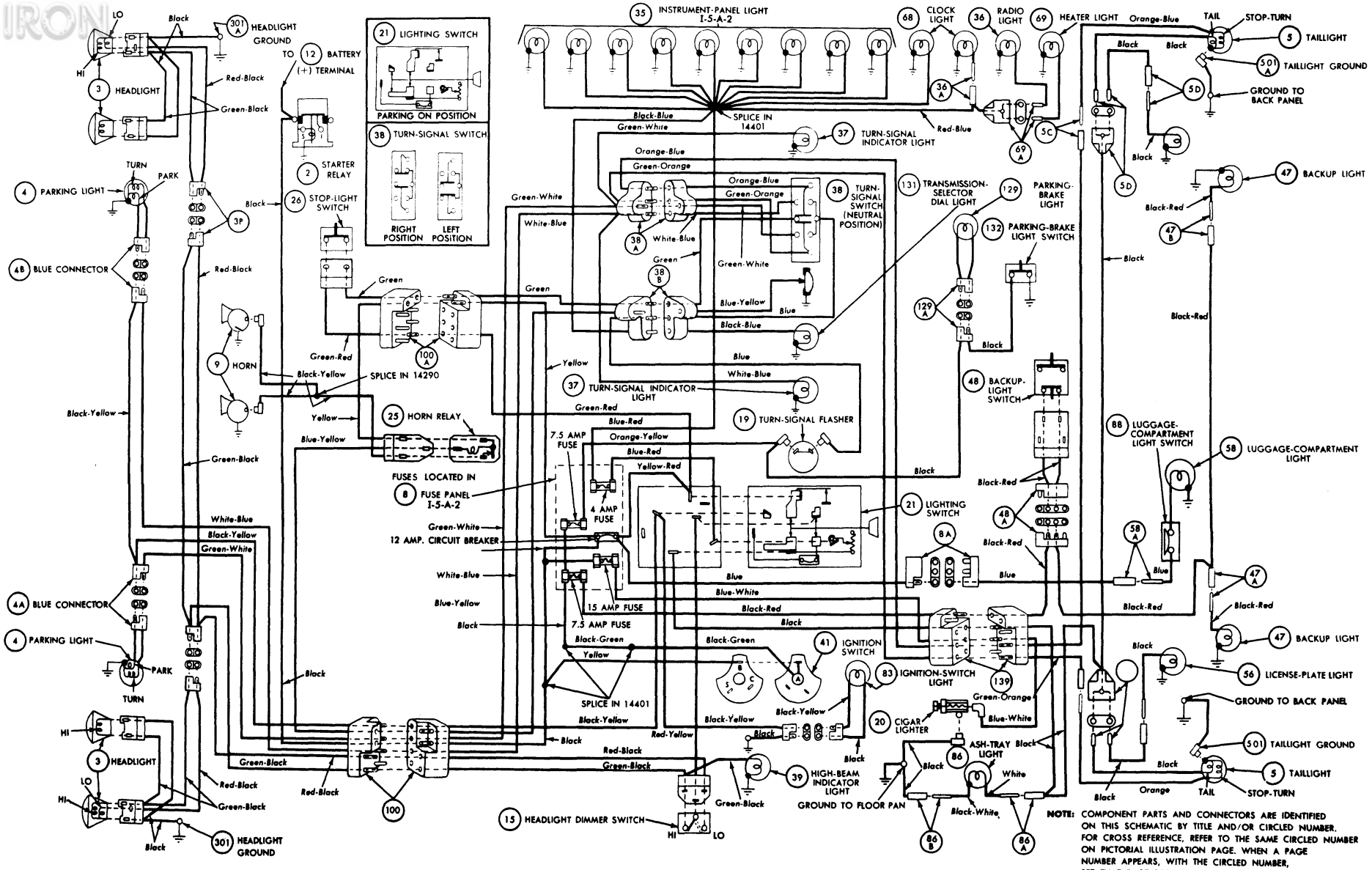

NOTE: COMPONENT PARTS AND CONNECTORS ARE IDENTIFIED ON THIS SCHEMATIC BY TITLE AND/OR CIRCLED NUMBER. FOR CROSS REFERENCE, REFER TO THE SAME CIRCLED NUMBER ON PICTORIAL ILLUSTRATION PAGE. WHEN A PAGE NUMBER APPEARS, WITH THE CIRCLED NUMBER, SEE THAT PAGE FOR ADDITIONAL REFERENCE. FOR MASTER WIRING LOCATOR, SEE PAGE

EXTERIOR LIGHTING, HORN, TURN SIGNALS, AND CIGAR LIGHTER SCHEMATIC

GROUP	PART	SECTION	PLATE
I	5	E	1

1963 THUNDERBIRD

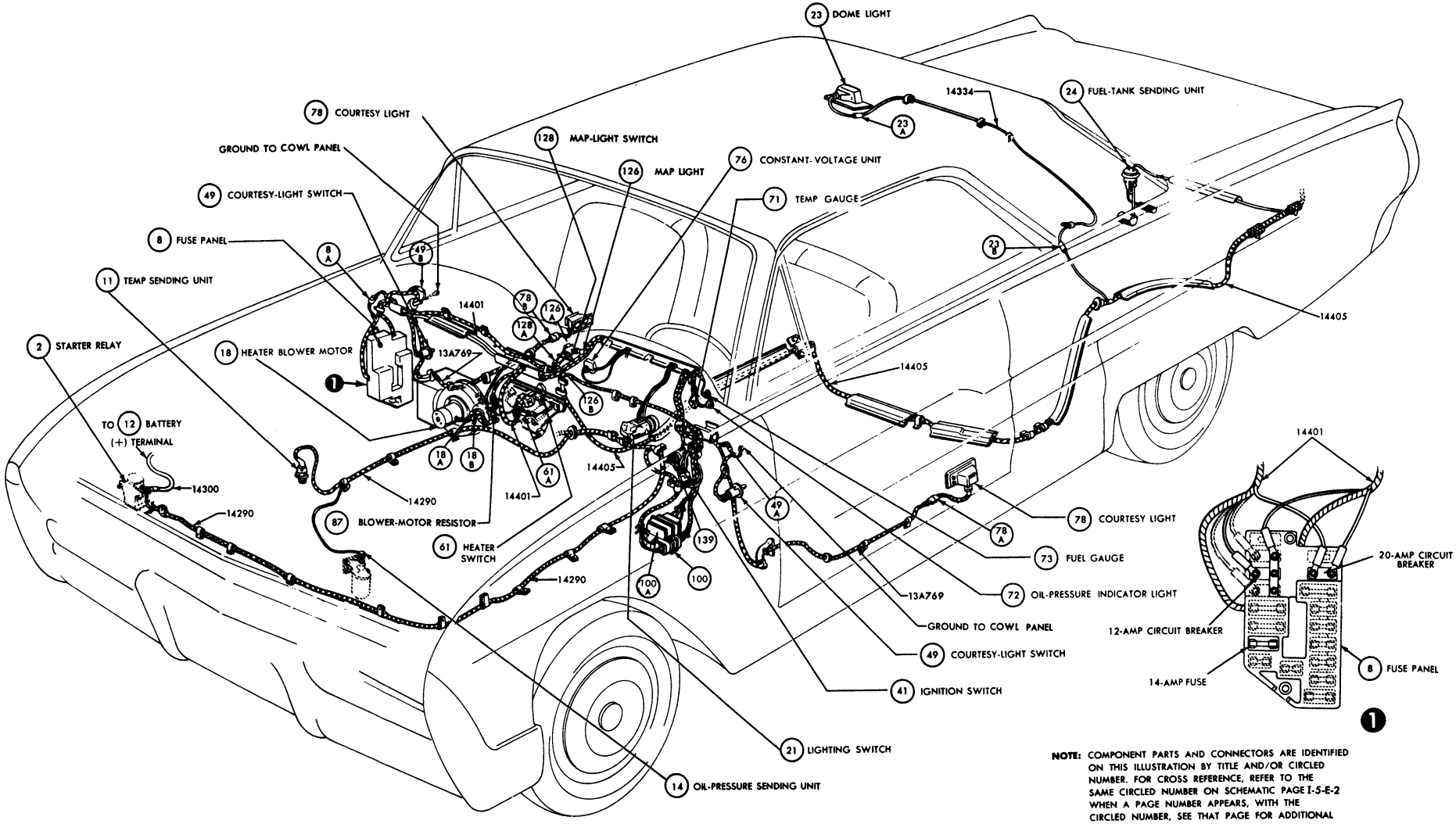

NOTE: COMPONENT PARTS AND CONNECTORS ARE IDENTIFIED ON THIS ILLUSTRATION BY TITLE AND/OR CIRCLED NUMBER. FOR CROSS REFERENCE, REFER TO THE SAME CIRCLED NUMBER ON SCHEMATIC PAGE I-5-E-2 WHEN A PAGE NUMBER APPEARS, WITH THE CIRCLED NUMBER, SEE THAT PAGE FOR ADDITIONAL REFERENCE.
FOR WIRE COLORS, SEE PAGE I-5-E-2
FOR MASTER WIRING LOCATOR, SEE PAGE I-5-A-1

INTERIOR LIGHTING, WINDSHIELD WIPER, GAUGES, AND HEATER WIRING

1963 THUNDERBIRD

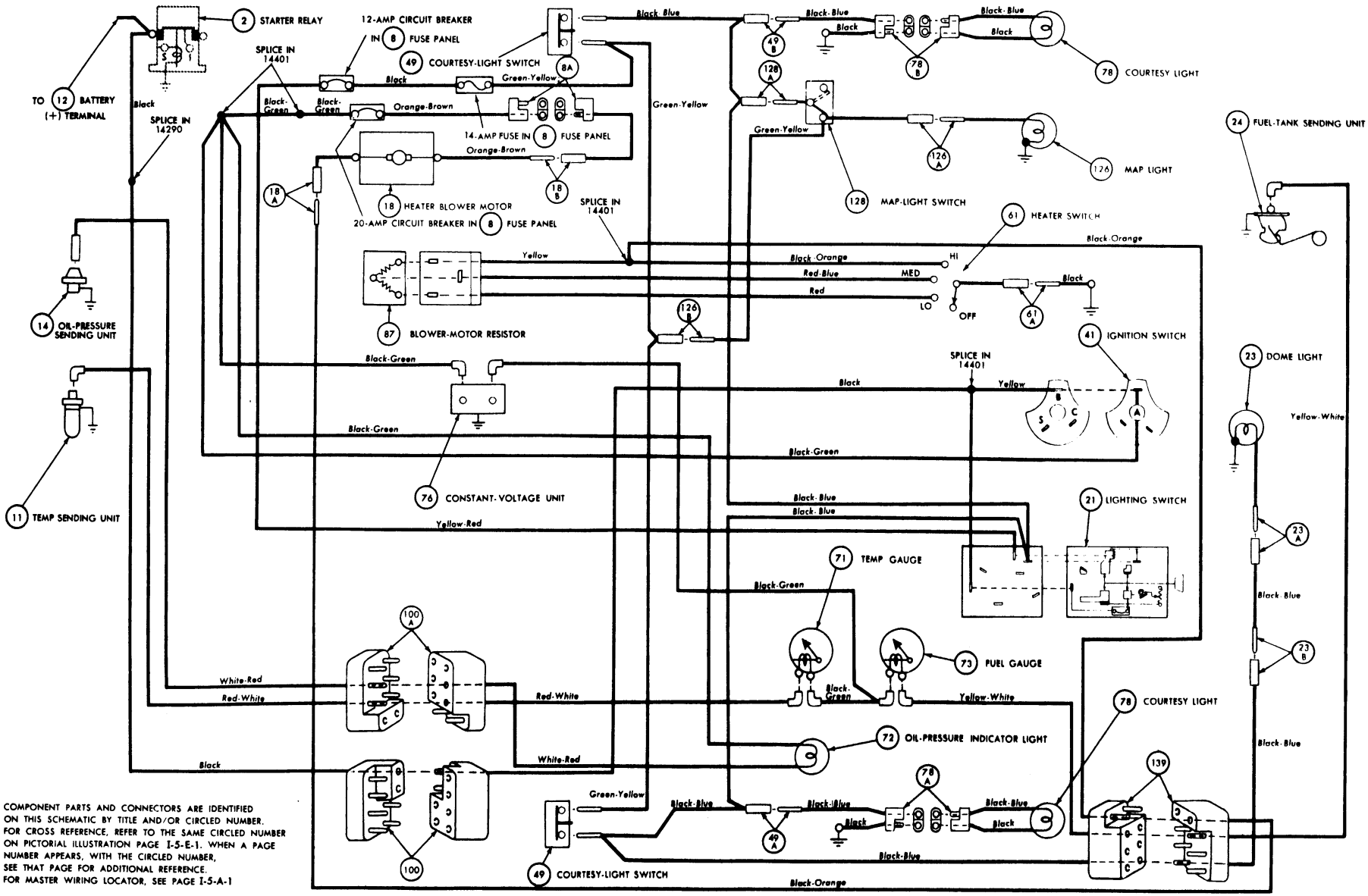

NOTE: COMPONENT PARTS AND CONNECTORS ARE IDENTIFIED ON THIS SCHEMATIC BY TITLE AND/OR CIRCLED NUMBER. FOR CROSS REFERENCE, REFER TO THE SAME CIRCLED NUMBER ON PICTORIAL ILLUSTRATION PAGE I-5-E-1. WHEN A PAGE NUMBER APPEARS, WITH THE CIRCLED NUMBER, SEE THAT PAGE FOR ADDITIONAL REFERENCE. FOR MASTER WIRING LOCATOR, SEE PAGE I-5-A-1

INTERIOR LIGHTING, WINDSHIELD WIPER, GAUGES, AND HEATER SCHEMATIC

GROUP	PART	SECTION	PLATE
I	5	L	1

1963 THUNDERBIRD

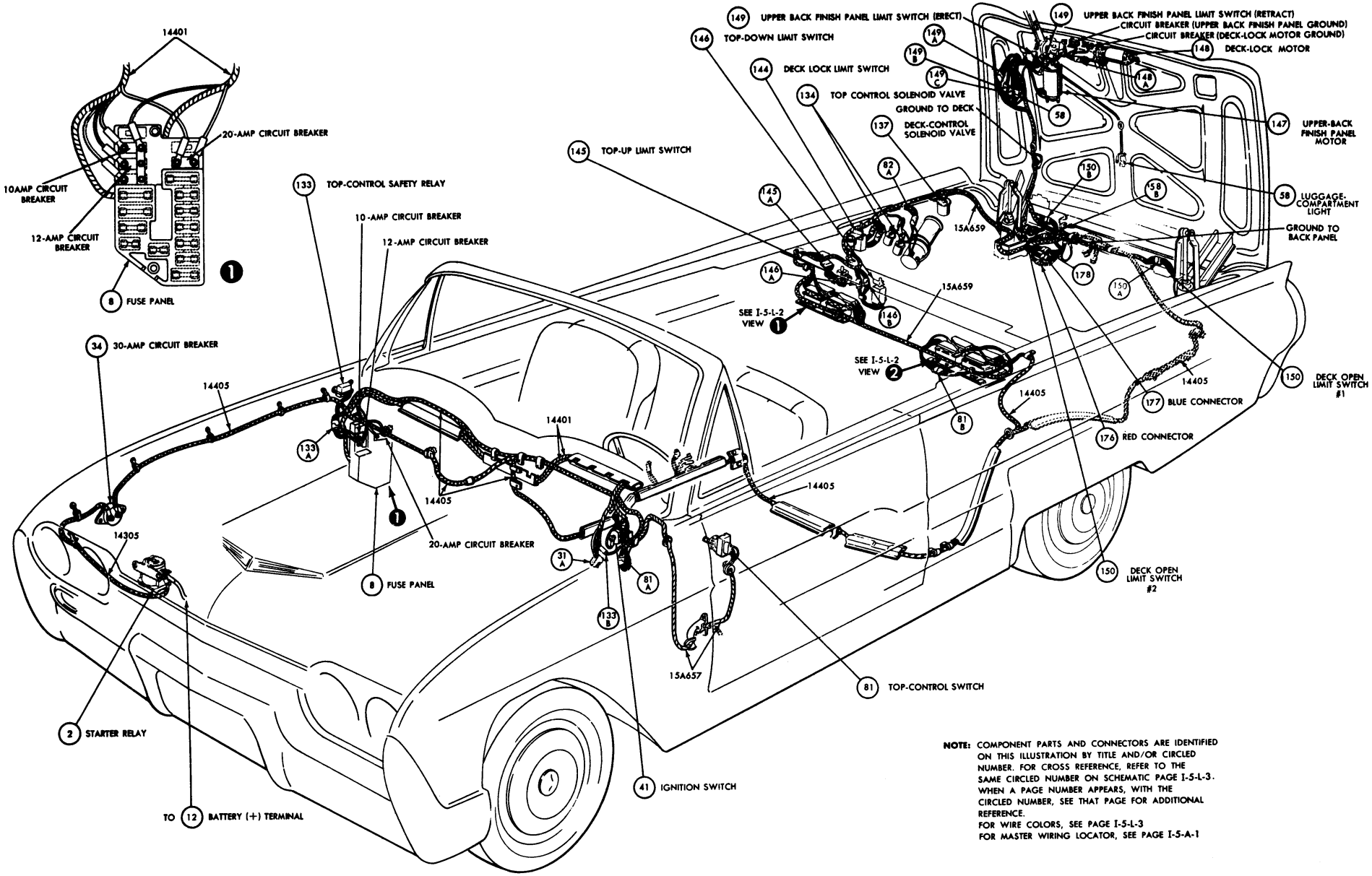

NOTE: COMPONENT PARTS AND CONNECTORS ARE IDENTIFIED ON THIS ILLUSTRATION BY TITLE AND/OR CIRCLED NUMBER. FOR CROSS REFERENCE, REFER TO THE SAME CIRCLED NUMBER ON SCHEMATIC PAGE I-5-L-3. WHEN A PAGE NUMBER APPEARS, WITH THE CIRCLED NUMBER, SEE THAT PAGE FOR ADDITIONAL REFERENCE.
FOR WIRE COLORS, SEE PAGE I-5-L-3
FOR MASTER WIRING LOCATOR, SEE PAGE I-5-A-1

POWER TOP WIRING

1963 THUNDERBIRD

GROUP	PART	SECTION	PLATE
I	5	L	2

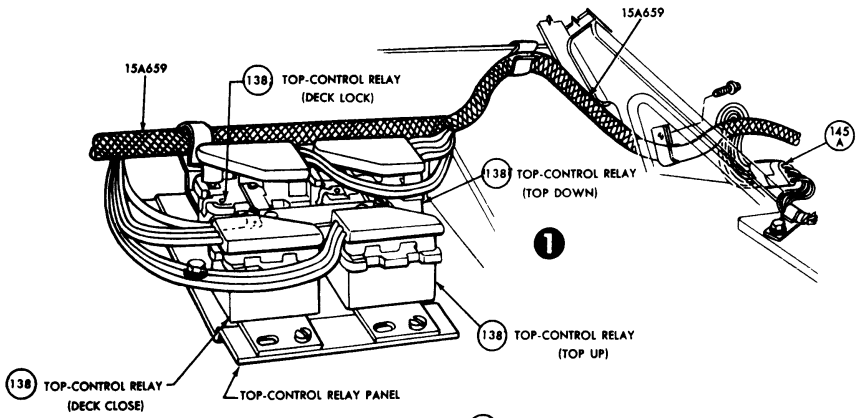

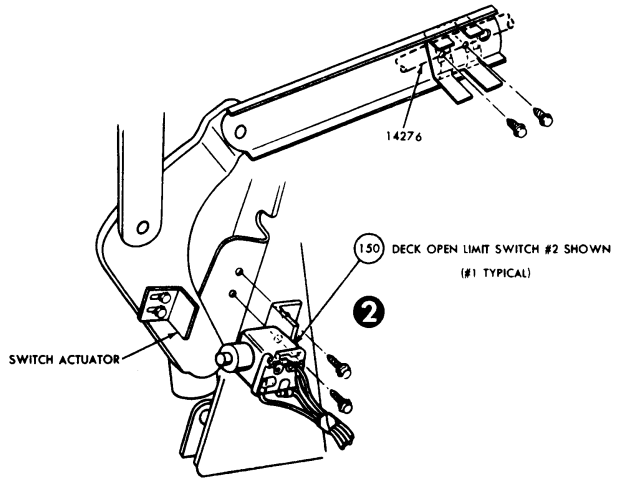

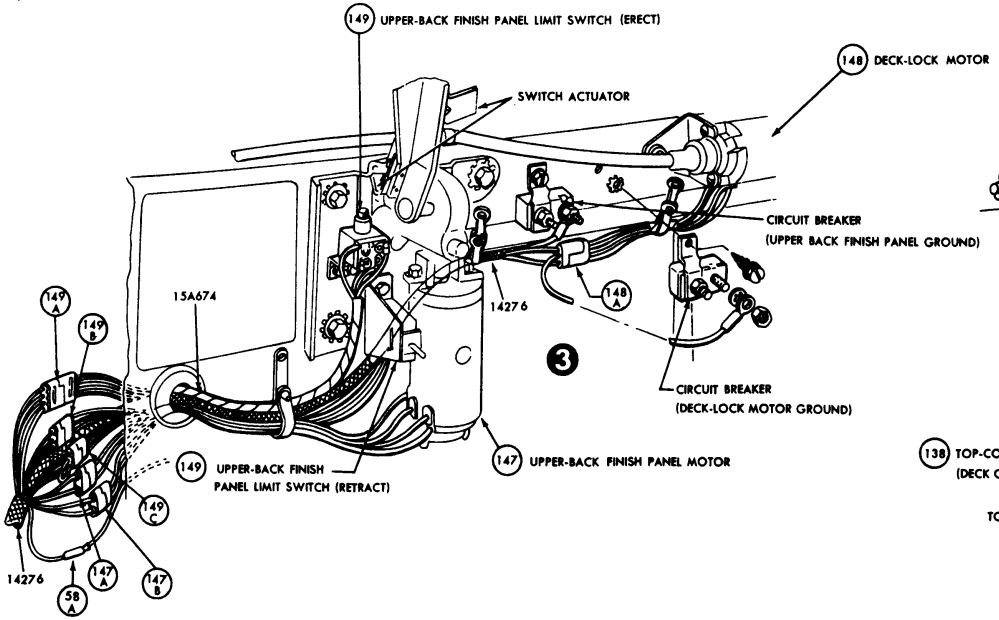

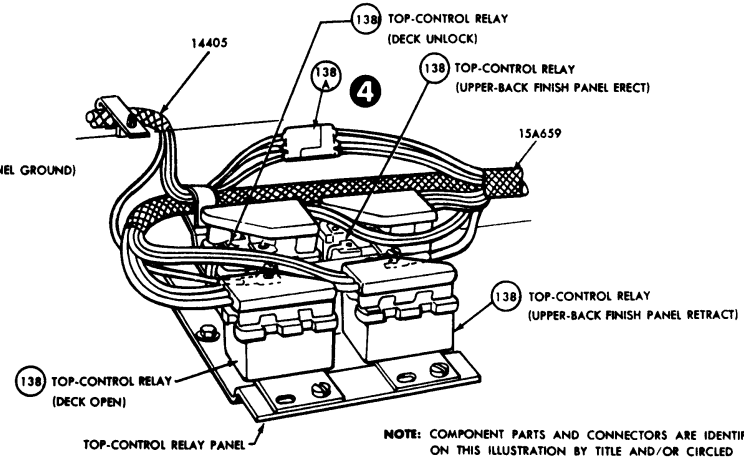

NOTE: COMPONENT PARTS AND CONNECTORS ARE IDENTIFIED ON THIS ILLUSTRATION BY TITLE AND/OR CIRCLED NUMBER. FOR CROSS REFERENCE, REFER TO THE SAME CIRCLED NUMBER ON SCHEMATIC PAGE I-5-L-3. WHEN A PAGE NUMBER APPEARS, WITH THE CIRCLED NUMBER, SEE THAT PAGE FOR ADDITIONAL REFERENCE.
FOR WIRE COLORS, SEE PAGE I-5-L-3.

POWER TOP WIRING DETAILED VIEWS

GROUP	PART	SECTION	PLATE
I	5	L	3

1963 THUNDERBIRD

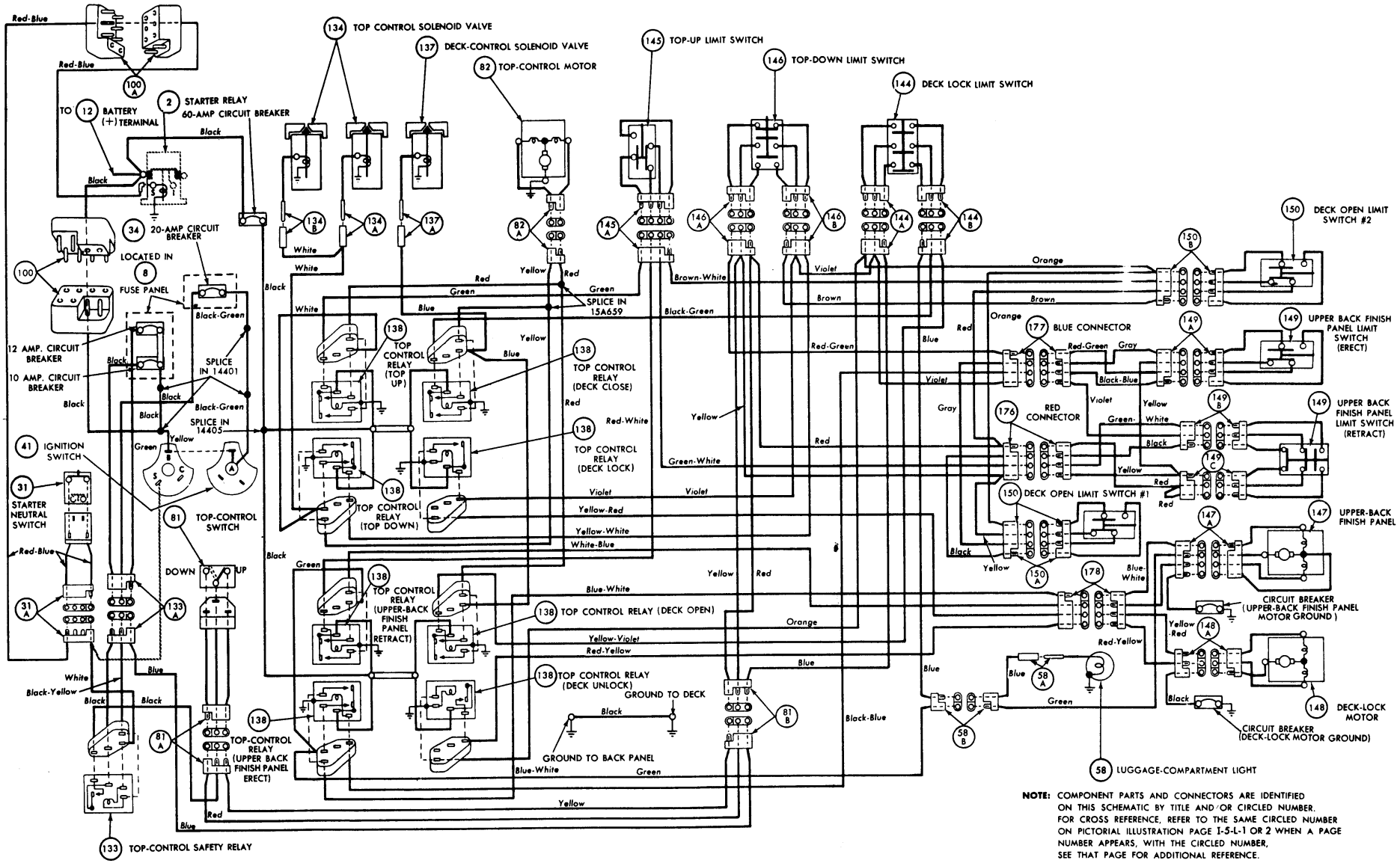

NOTE: COMPONENT PARTS AND CONNECTORS ARE IDENTIFIED ON THIS SCHEMATIC BY TITLE AND/OR CIRCLED NUMBER. FOR CROSS REFERENCE, REFER TO THE SAME CIRCLED NUMBER ON PICTORIAL ILLUSTRATION PAGE I-5-L-1 OR 2 WHEN A PAGE NUMBER APPEARS, WITH THE CIRCLED NUMBER, SEE THAT PAGE FOR ADDITIONAL REFERENCE. FOR MASTER WIRING LOCATOR, SEE PAGE I-5-A-1

POWER TOP SCHEMATIC

1963 THUNDERBIRD

GROUP	PART	SECTION	PLATE
I	5	M	1

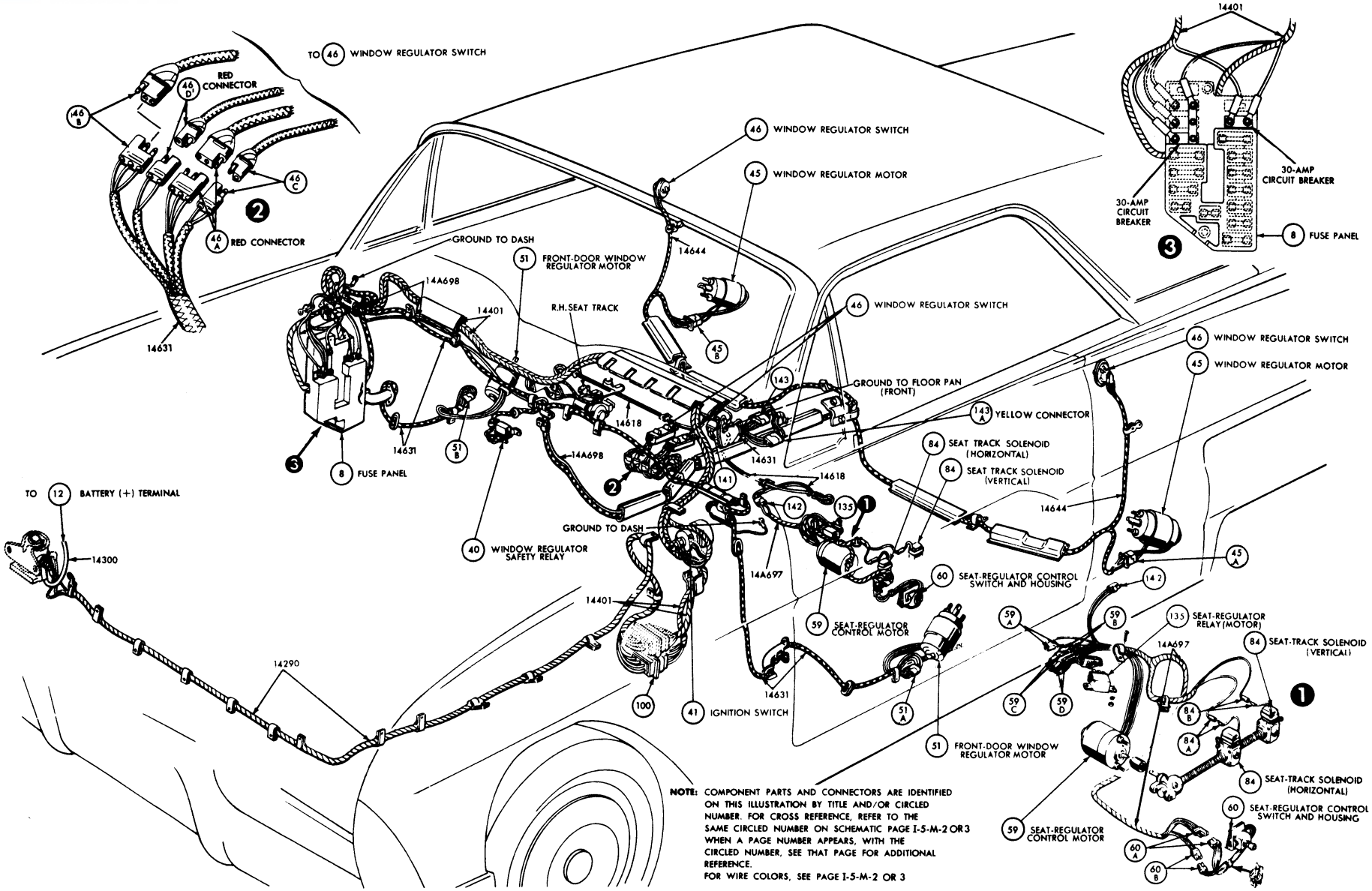

NOTE: COMPONENT PARTS AND CONNECTORS ARE IDENTIFIED ON THIS ILLUSTRATION BY TITLE AND/OR CIRCLED NUMBER. FOR CROSS REFERENCE, REFER TO THE SAME CIRCLED NUMBER ON SCHEMATIC PAGE I-5-M-2 OR 3 WHEN A PAGE NUMBER APPEARS, WITH THE CIRCLED NUMBER, SEE THAT PAGE FOR ADDITIONAL REFERENCE.
FOR WIRE COLORS, SEE PAGE I-5-M-2 OR 3

POWER WINDOWS AND SEATS WIRING

GROUP	PART	SECTION	PLATE
I	5	M	2

1963 THUNDERBIRD

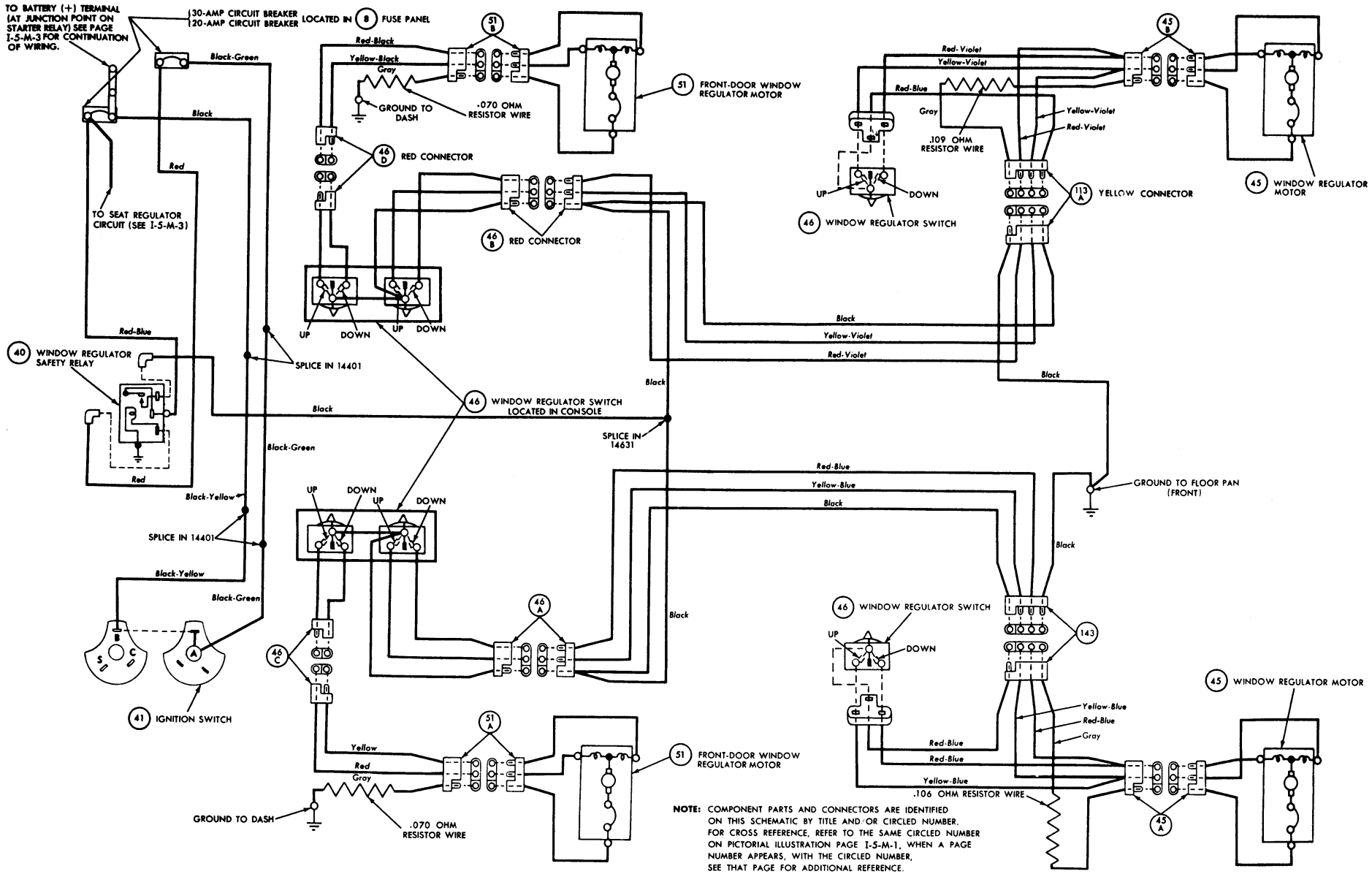

NOTE: COMPONENT PARTS AND CONNECTORS ARE IDENTIFIED ON THIS SCHEMATIC BY TITLE AND/OR CIRCLED NUMBER. FOR CROSS REFERENCE, REFER TO THE SAME CIRCLED NUMBER ON PICTORIAL ILLUSTRATION PAGE I-5-M-1. WHEN A PAGE NUMBER APPEARS, WITH THE CIRCLED NUMBER, SEE THAT PAGE FOR ADDITIONAL REFERENCE. FOR MASTER WIRING LOCATOR, SEE PAGE I-5-A-1

POWER WINDOWS SCHEMATIC

1963 THUNDERBIRD

GROUP	PART	SECTION	PLATE
I	5	M	3

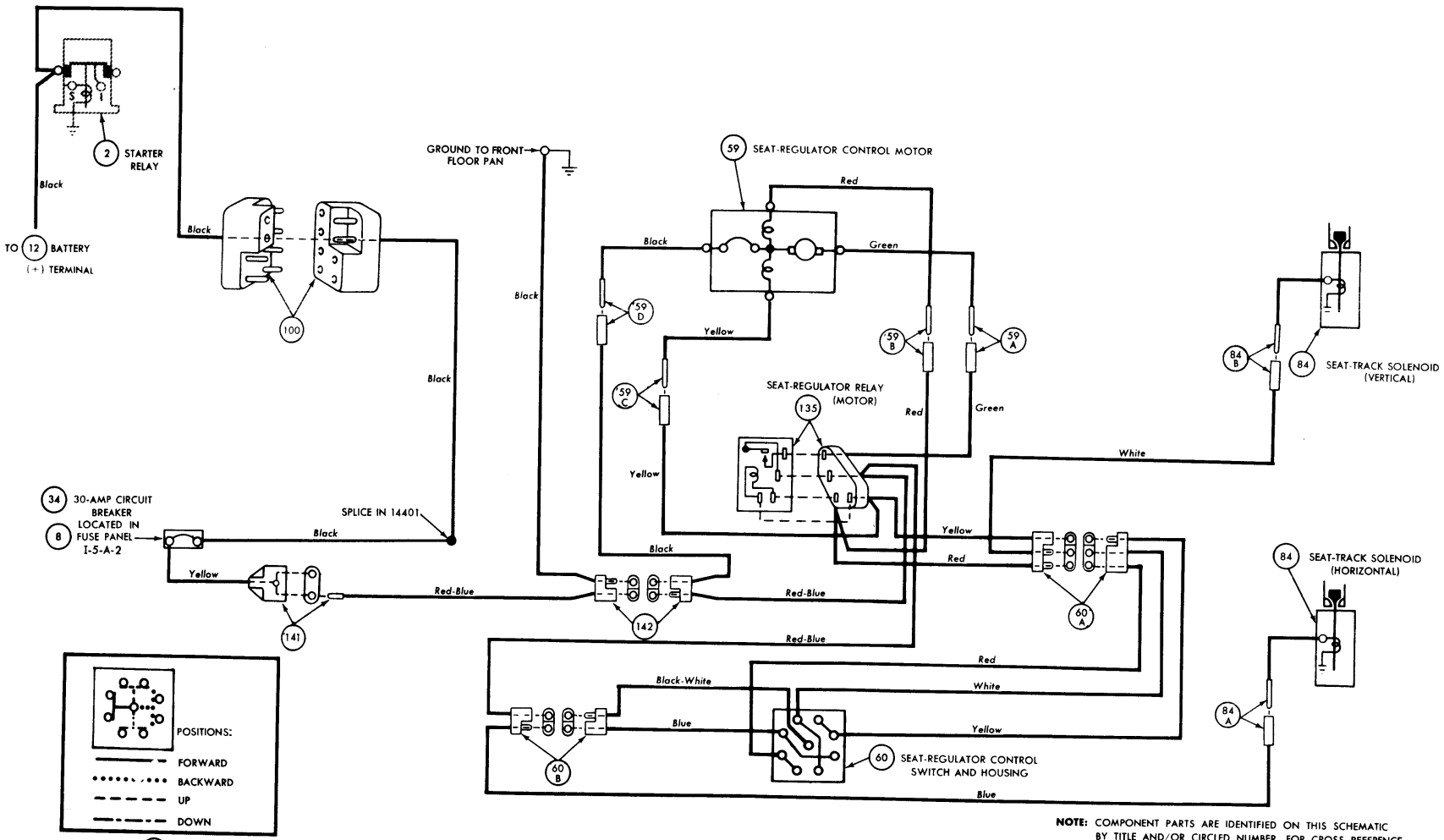

NOTE: COMPONENT PARTS ARE IDENTIFIED ON THIS SCHEMATIC BY TITLE AND/OR CIRCLED NUMBER. FOR CROSS REFERENCE, REFER TO THE SAME CIRCLED NUMBER ON PICTORIAL ILLUSTRATION PAGE I-5-M-1. WHEN A PAGE NUMBER APPEARS, WITH THE CIRCLED NUMBER, SEE THAT PAGE FOR ADDITIONAL REFERENCE.

POWER SEATS SCHEMATIC